CORRECTED VERSION*

PCT

WORLD INTELLECTUAL PROPERTY ORGANIZATION
International Bureau

INTERNATIONAL APPLICATION PUBLISHED UNDER THE PATENT COOPERATION TREATY (PCT)

(51) International Patent Classification 6 :
B01L 7/00, C12Q 1/68, H01L 35/28, F25B 21/02, G01R 27/20

A3

(11) International Publication Number: WO 98/43740

(43) International Publication Date: 8 October 1998 (08.10.98)

(21) International Application Number: PCT/US98/06189

(22) International Filing Date: 30 March 1998 (30.03.98)

(30) Priority Data:
60/041,754 28 March 1997 (28.03.97) US
60/046,122 9 May 1997 (09.05.97) US

(71) Applicant *(for all designated States except US)*: THE PERKIN–ELMER CORPORATION [US/US]; 761 Main Avenue, Norwalk, CT 06859–0199 (US).

(72) Inventors; and

(75) Inventors/Applicants *(for US only)*: ATWOOD, John, G. [US/US]; 149 Limekiln Road, West Redding, CT 06896 (US). FAWCETT, Adrian [US/US]; 112 Spring Hill Avenue, Norwalk, CT 06850 (US). FERRARA, Keith, S. [US/US]; 383 Woodstock Avenue, Stratford, CT 06497 (US). HETHERINGTON, Paul, M. [US/US]; #103 10 Wild Oaks Road, Goldens Bridge, NY 10526 (US). NOREIKS, Richard, W. [US/US]; 5300 Main Street, Stratford, CT 06497 (US). OLSEN, Douglas, E. [US/US]; 30 Lake Drive South, New Fairfield, CT 06812 (US). WIDOMSKI, John, R. [US/US]; 10 Serene Drive, Shelton, CT 06484 (US). WITTMER, Charles, M. [US/US]; 15 Clarion Place, Trumbull, CT 06611 (US).

(74) Agent: AKER, David; The Perkin–Elmer Corporation, Mail Stop 199, 761 Main Avenue, Norwalk, CN 06859 (US).

(81) Designated States: AU, BR, CA, CN, IL, JP, KR, NZ, RU, SG, US, European patent (AT, BE, CH, DE, DK, ES, FI, FR, GB, GR, IE, IT, LU, MC, NL, PT, SE).

Published
With international search report.
Before the expiration of the time limit for amending the claims and to be republished in the event of the receipt of amendments.

(88) Date of publication of the international search report:
17 December 1998 (17.12.98)

9904499-2
IPDS
copy

(54) Title: IMPROVEMENTS IN THERMAL CYCLER FOR PCR

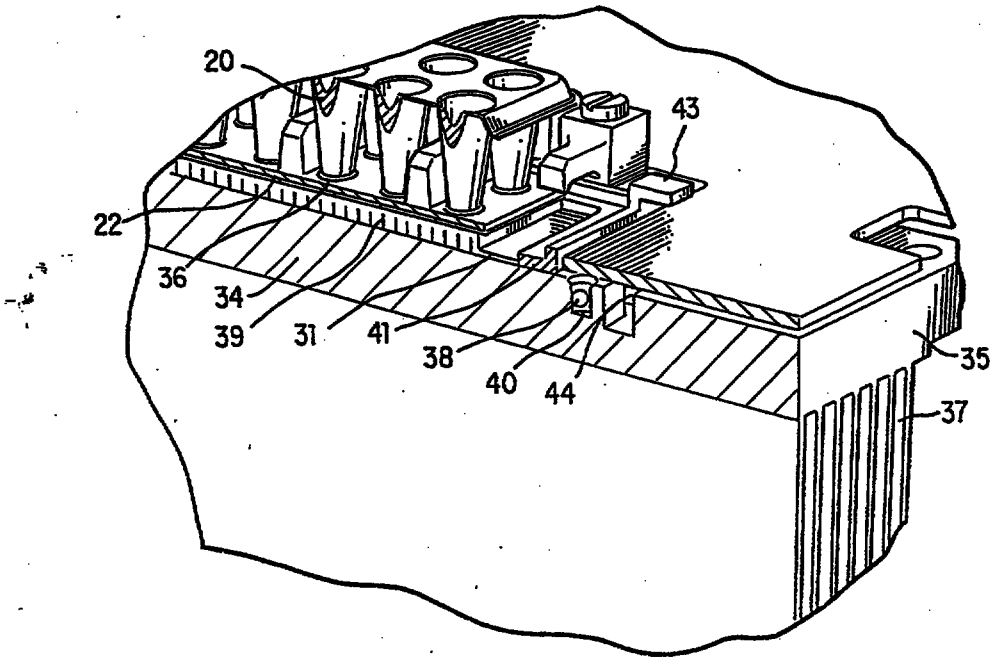

(57) Abstract

An instrument for performing highly accurate PCR employing an assembly, a heated cover and an internal computer. The assembly is made up of a sample block (36), a number of Peltier thermal electric devices (39) and heat sink (34), clamped together. The sample block (36) temperature is changed exclusively by the thermoelectric devices (39) controlled by the computer. The sample block (36) is of low thermal mass and is constructed of silver. The Peltier devices are designed to provide fast temperature excursions over a wide range. The heat sink (34) has a perimeter trench (44) to minimize edge losses and is adjacent to a continuously variable fan. A perimeter heater is used to improve the thermal uniformity across the sample block (36) to approximately +/– 0.2 °C.