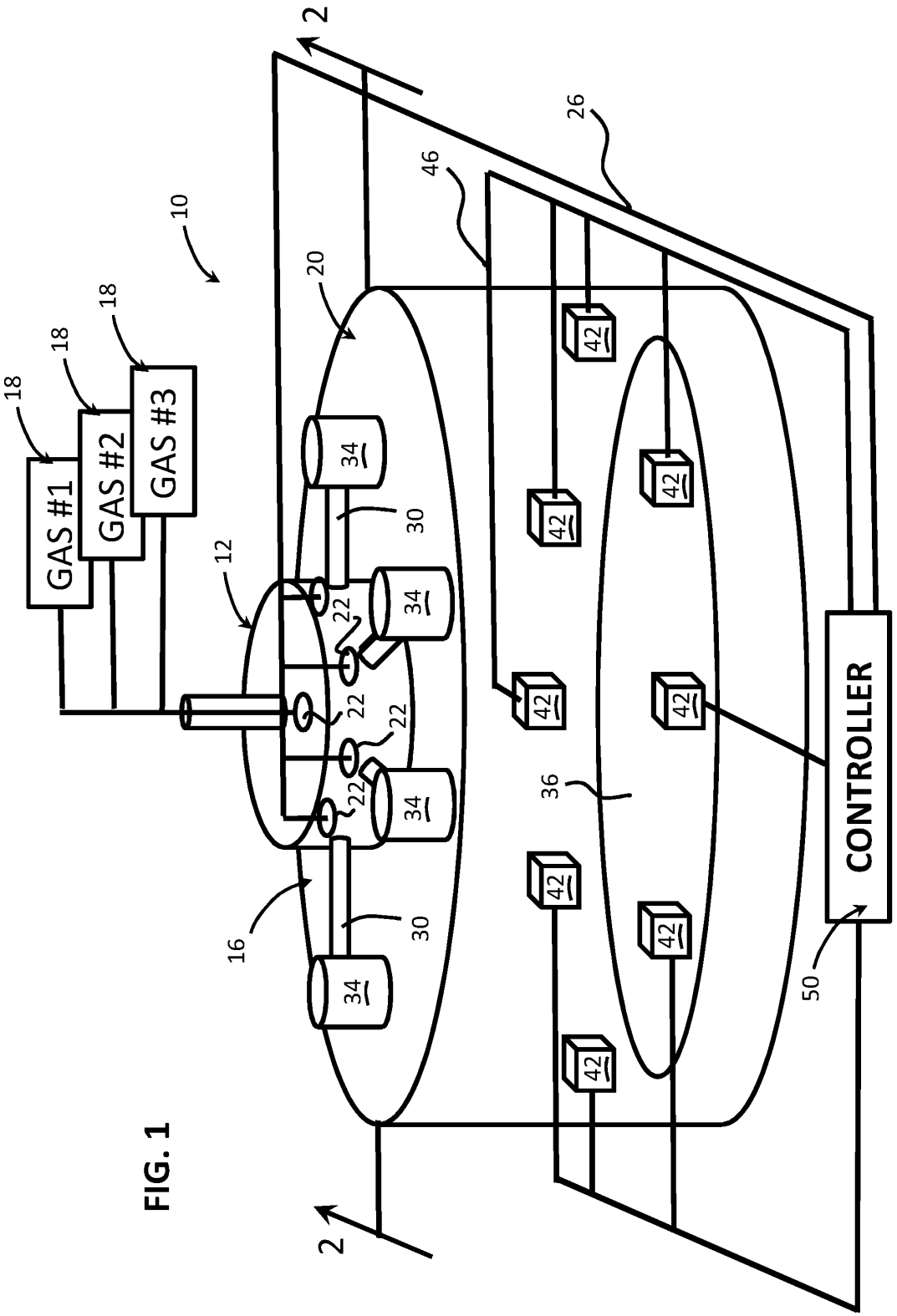


FIG. 1

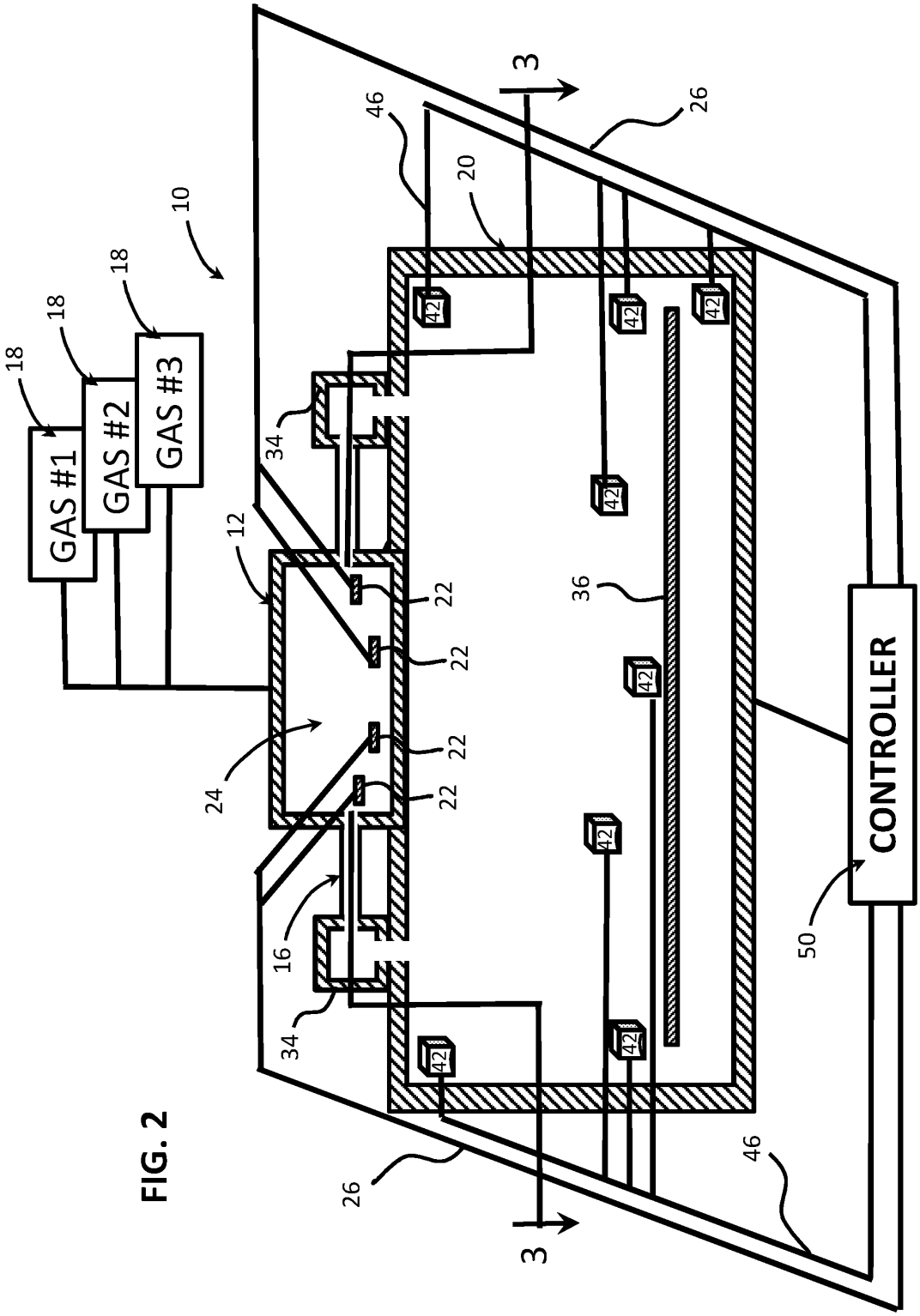
GAS #1
GAS #2
GAS #3
CONTROLLER
10
12
16
18
20
22
24
26
34
36
42
46
50
3
3

FIG. 2

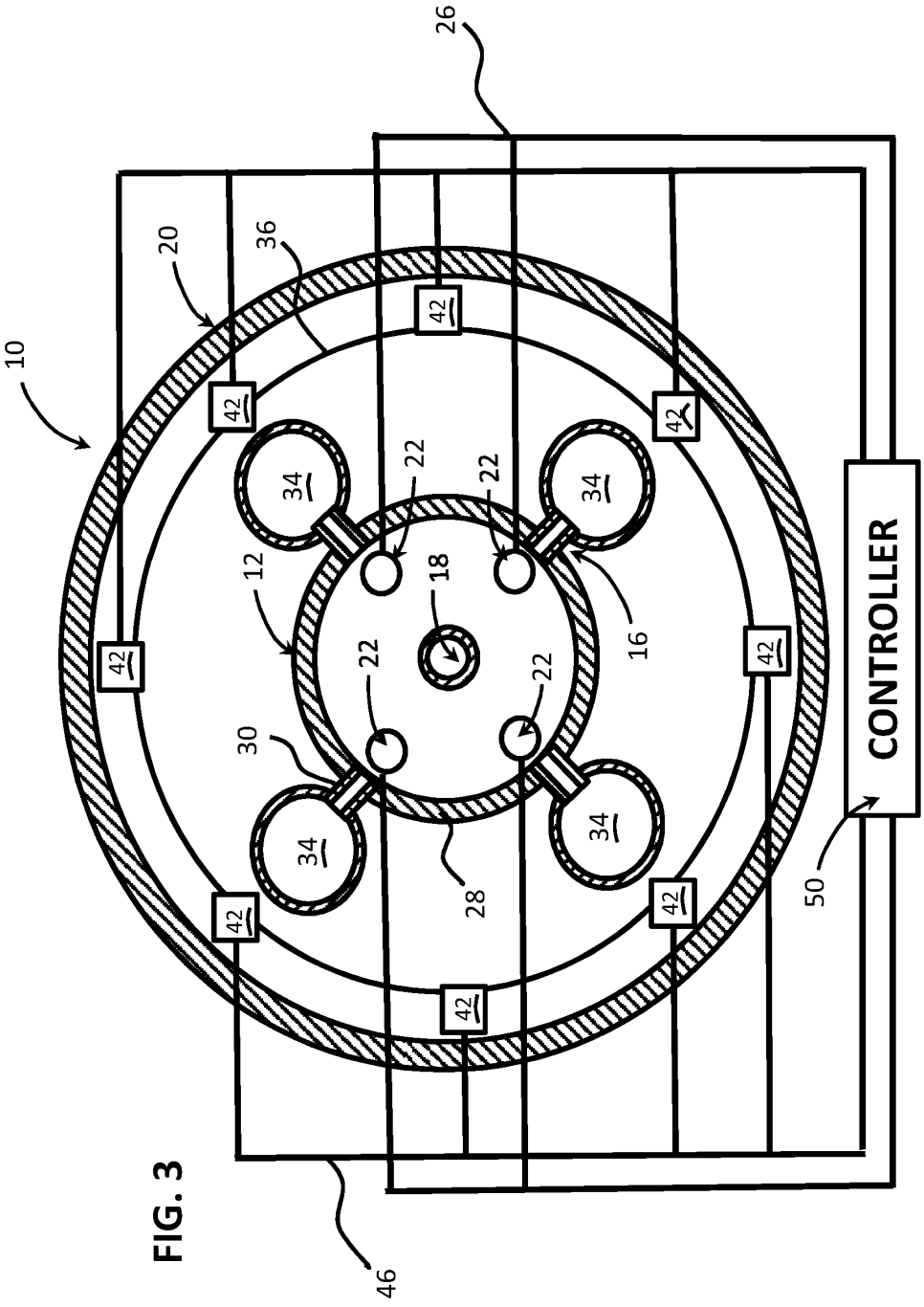


FIG. 3

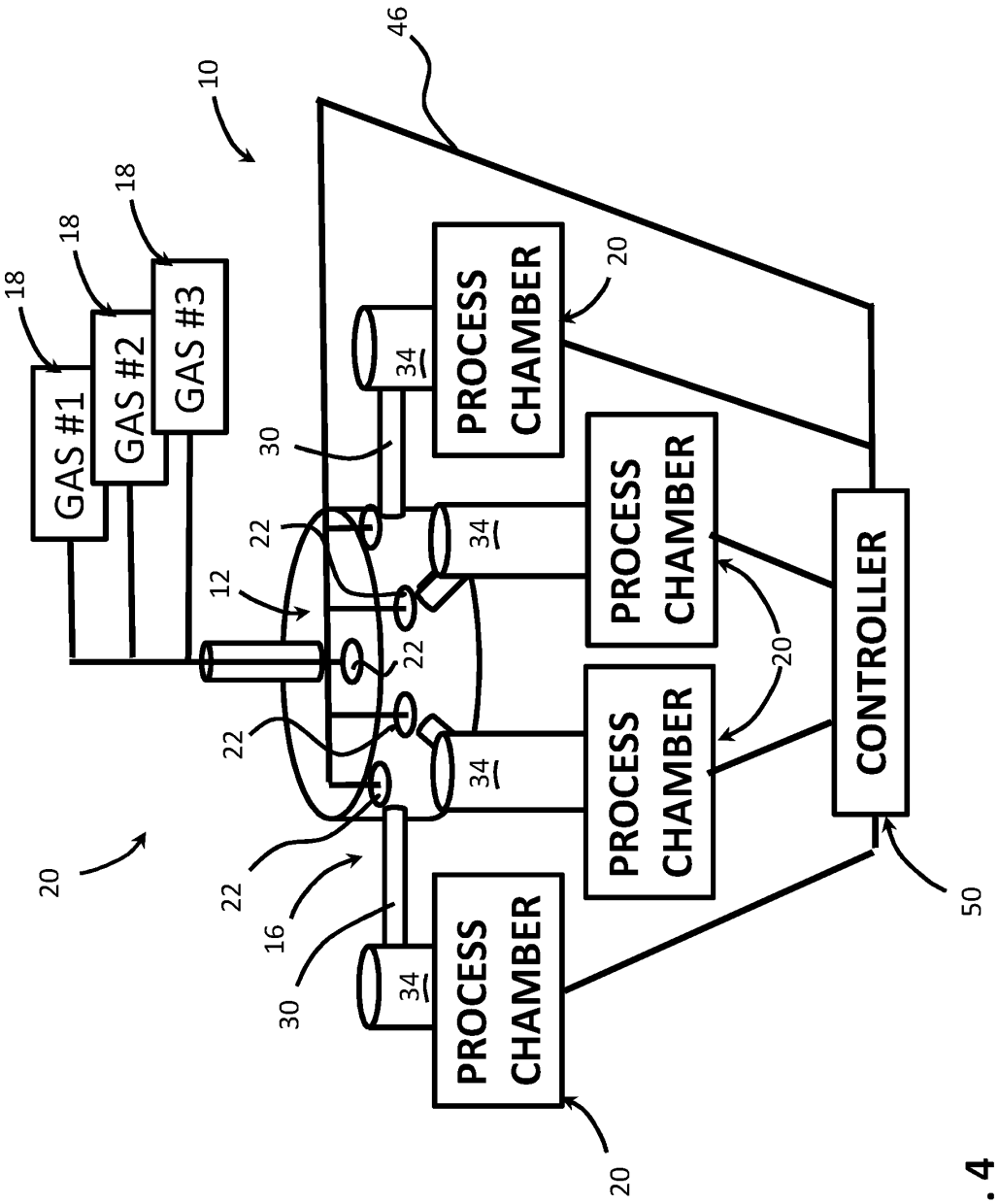
GAS #1
GAS #2
GAS #3
PROCESS CHAMBER
PROCESS CHAMBER
PROCESS CHAMBER
PROCESS CHAMBER
CONTROLLER
10
12
16
18
20
22
30
34
46
50

FIG. 4

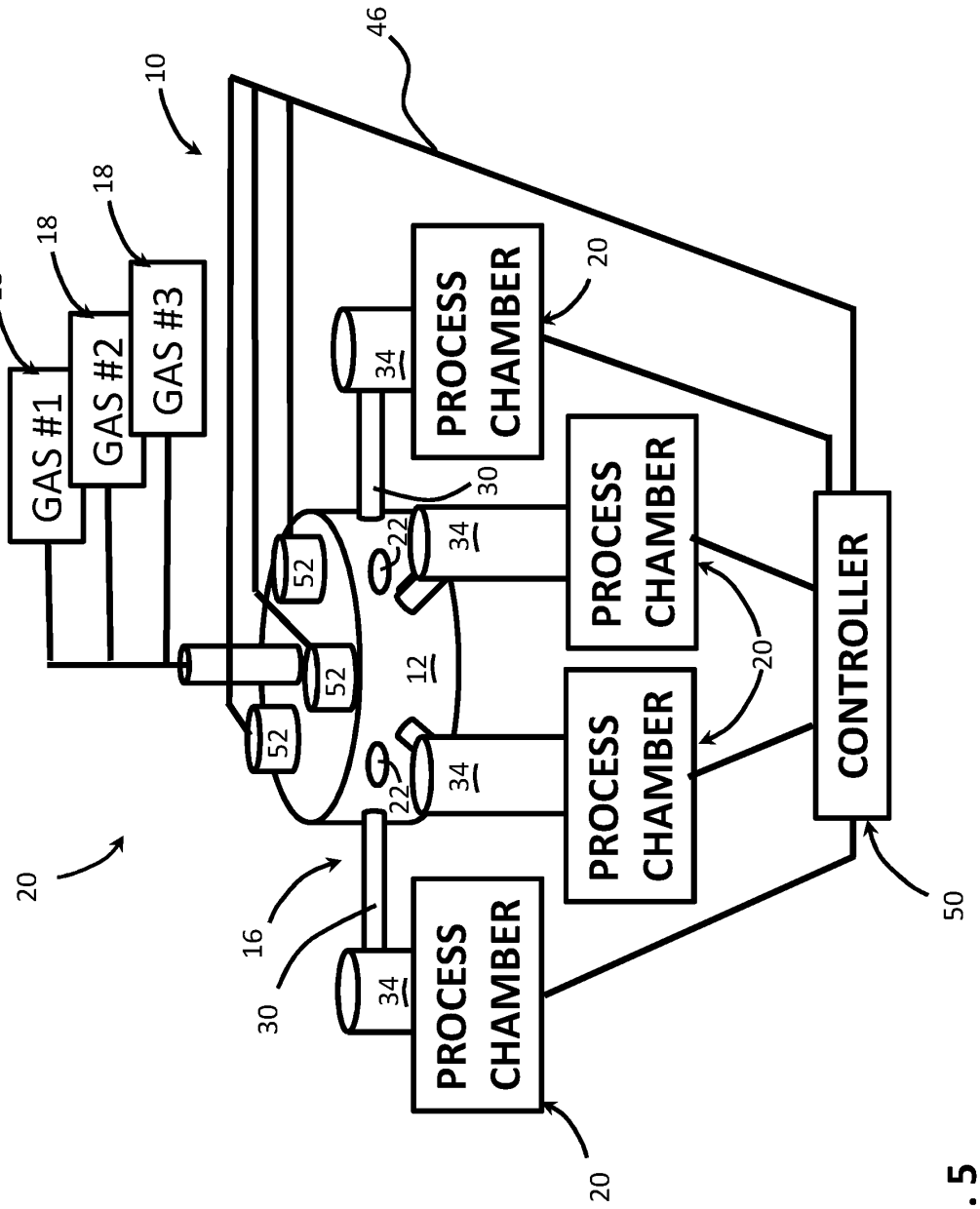
GAS #1
GAS #2
GAS #3
PROCESS CHAMBER
PROCESS CHAMBER
PROCESS CHAMBER
PROCESS CHAMBER
CONTROLLER
10
12
16
18
20
22
30
34
46
50
52

FIG. 5