FIG.1

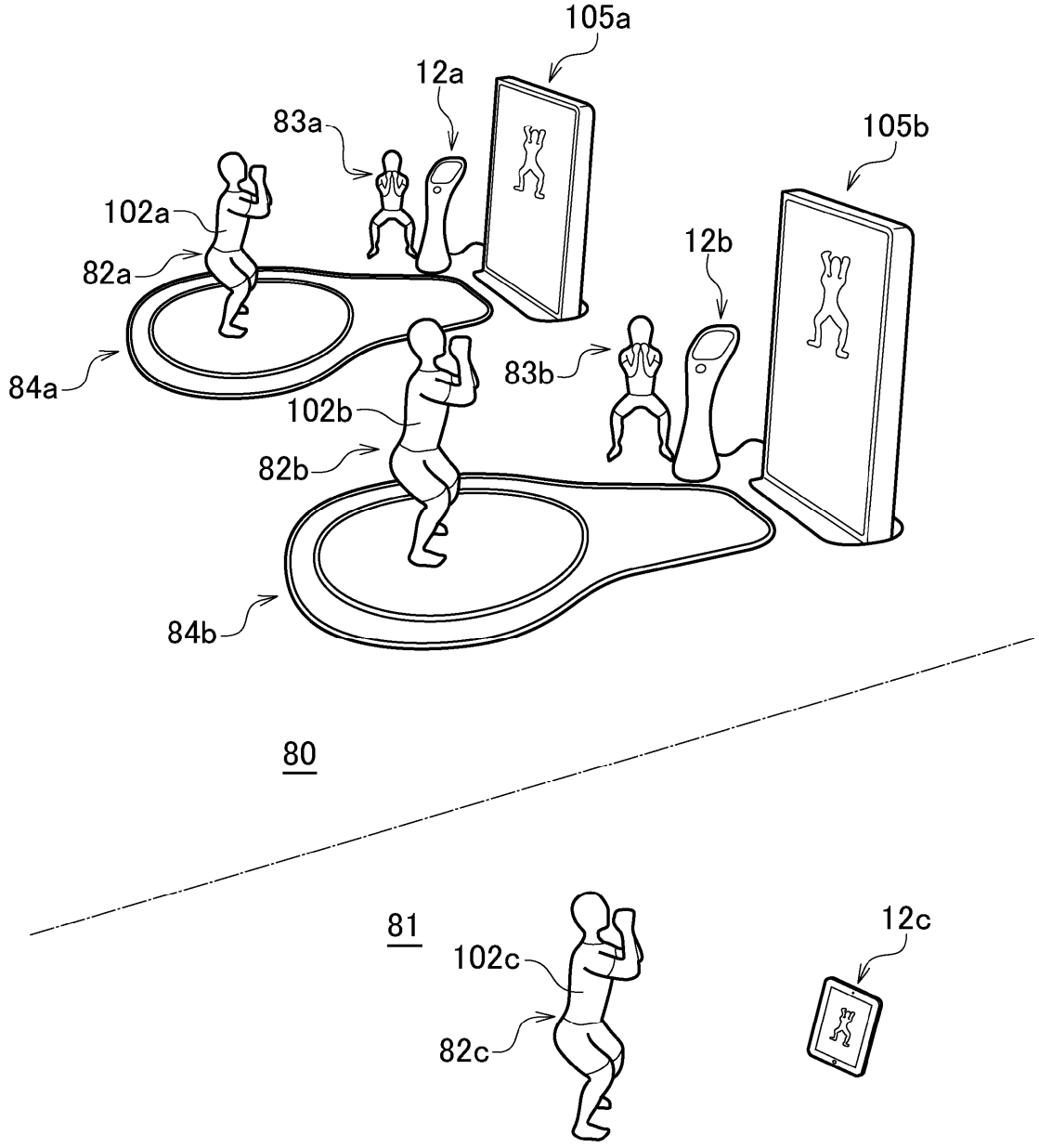
105a
12a
83a
105b
102a
12b
82a
84a
83b
102b
82b
84b
80
81
102c
12c
82c

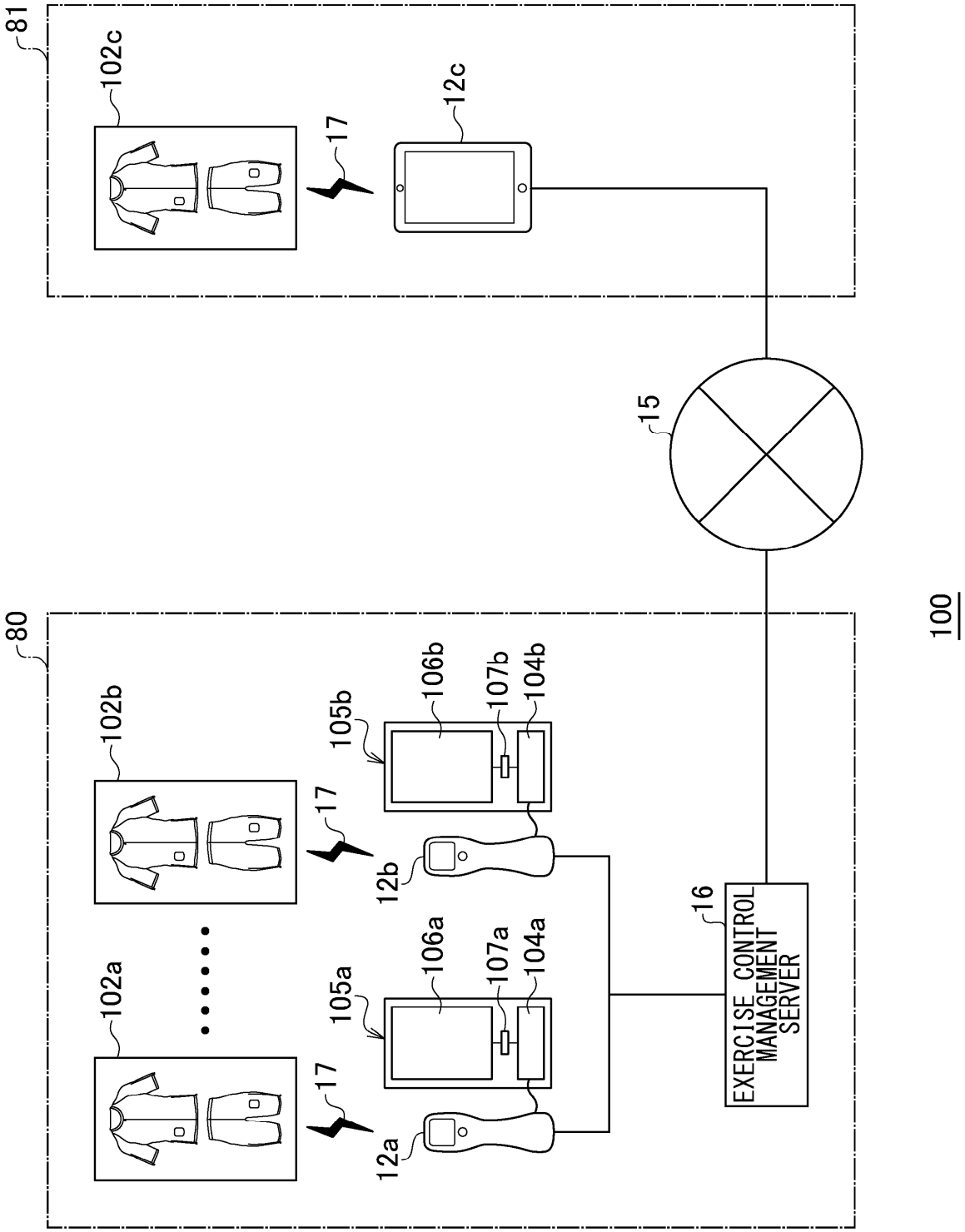
81
102c
17
12c
15
80
102b
17
105b
106b
107b
104b
12b
102a
17
105a
106a
107a
104a
12a
16
EXERCISE CONTROL MANAGEMENT SERVER
100

FIG.2

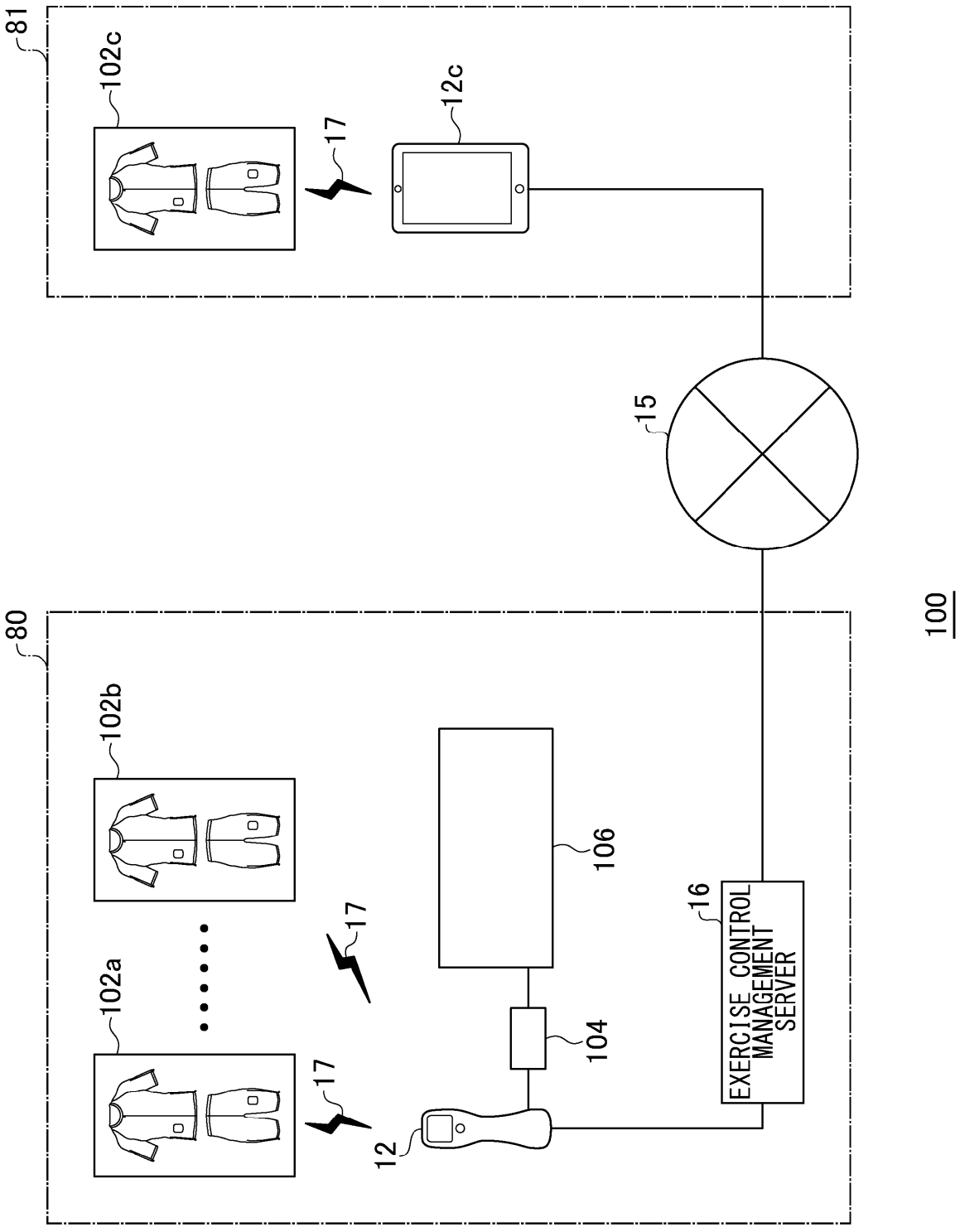
81
102c
17
12c
15
80
102b
17
106
16
EXERCISE CONTROL MANAGEMENT SERVER
102a
17
104
12
100

FIG.3

FIG.4

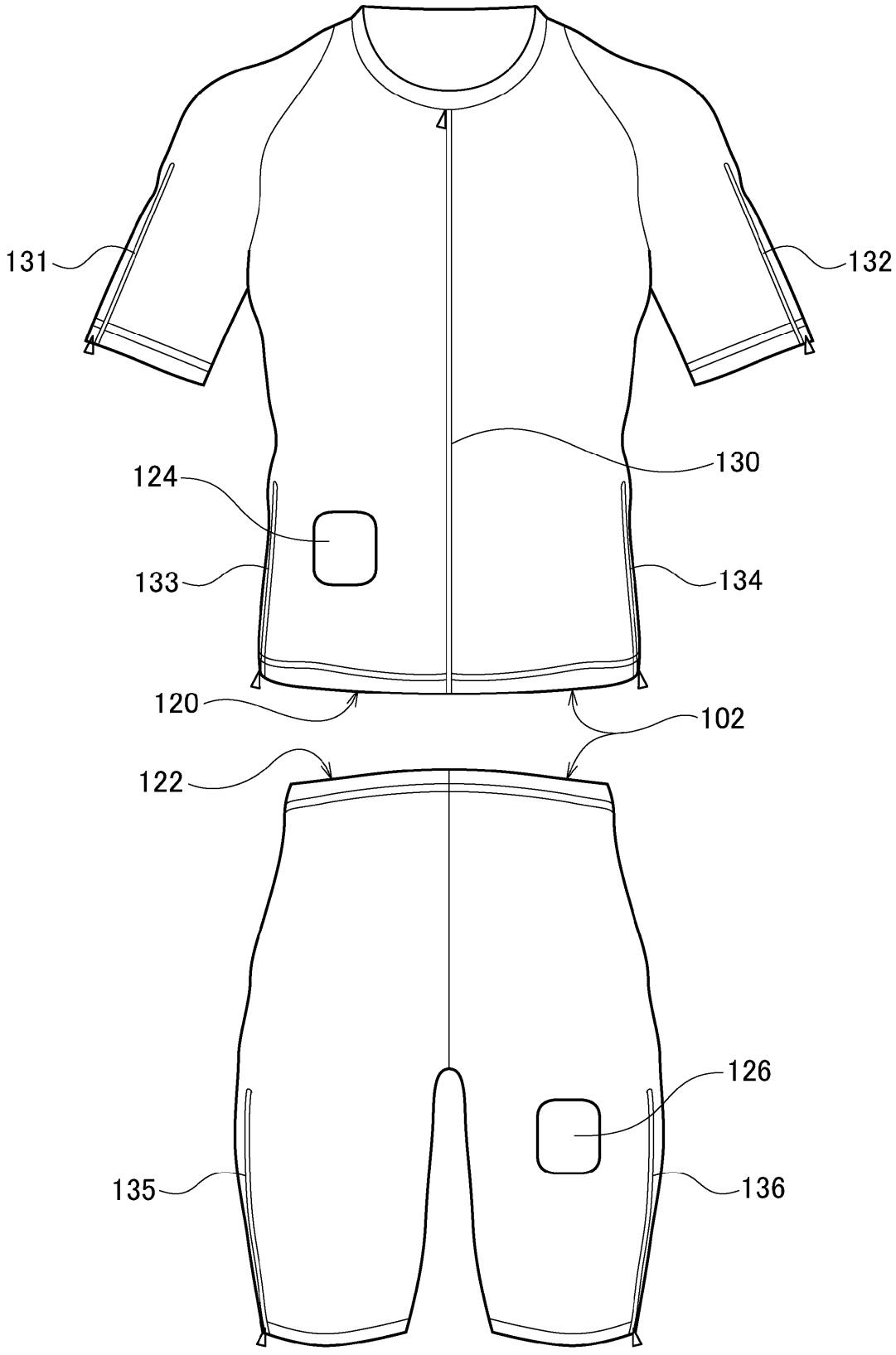

FIG.5A

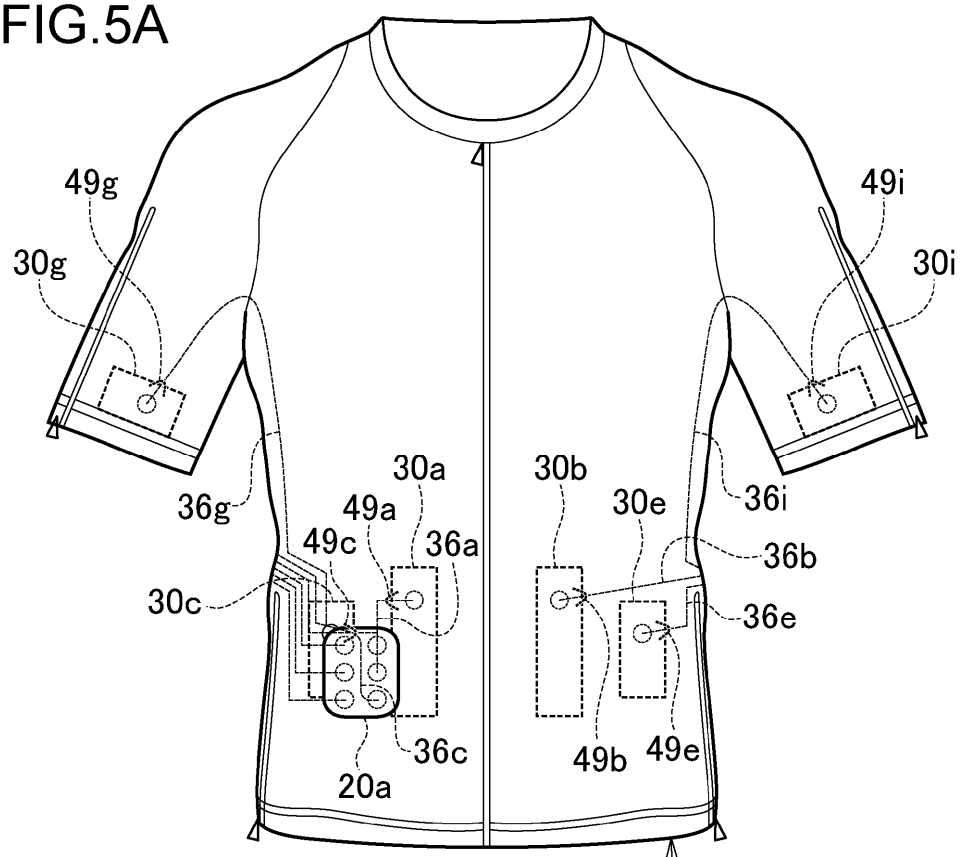
49g
30g
49i
30i
36g
30a
49a
49c
36a
30c
30b
30e
36i
36b
36e
36c
20a
49b
49e

FIG.5B

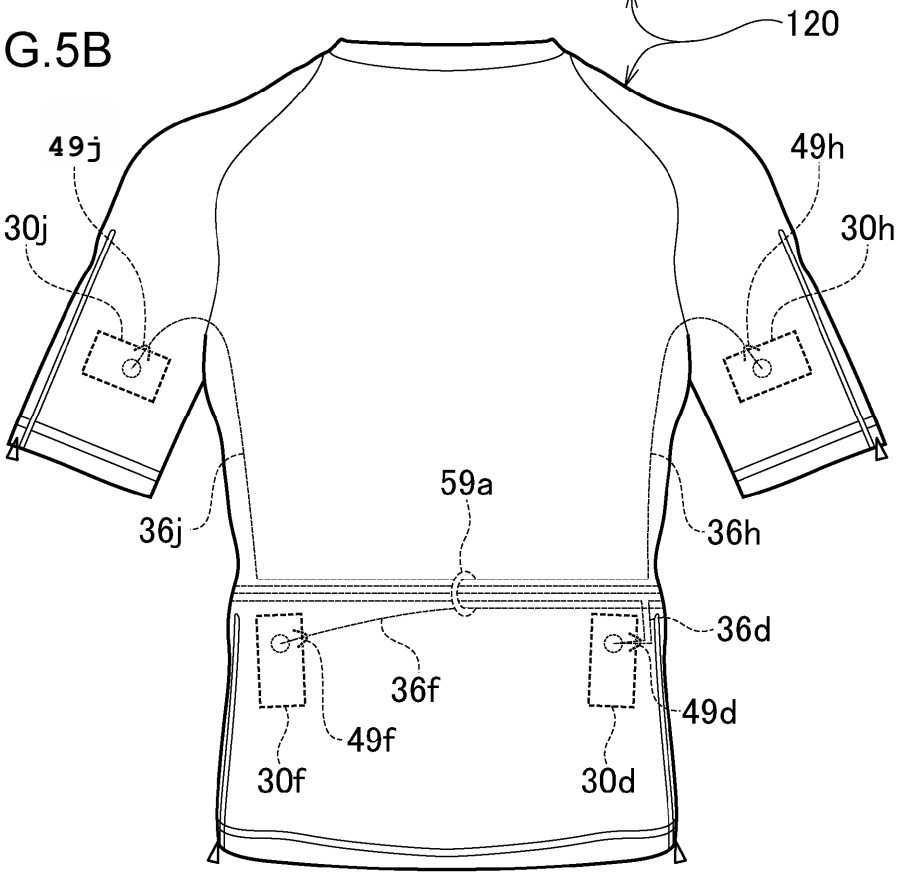
120
49j
30j
49h
30h
36j
59a
36h
36d
36f
49f
49d
30f
30d

FIG.6A

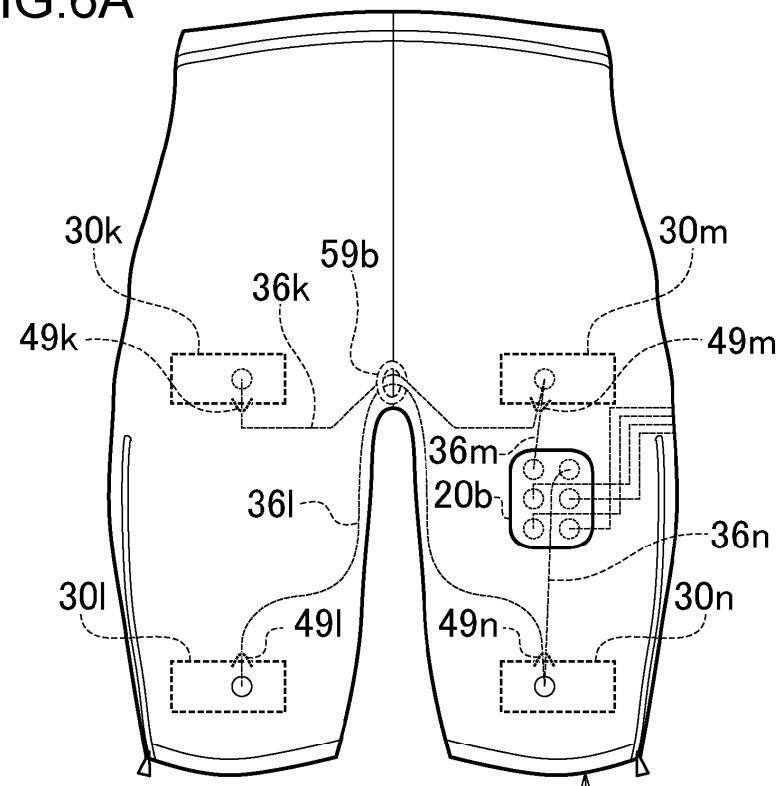
30k
59b
36k
30m
49k
49m
36m
20b
36l
36n
30l
49l
49n
30n

FIG.6B

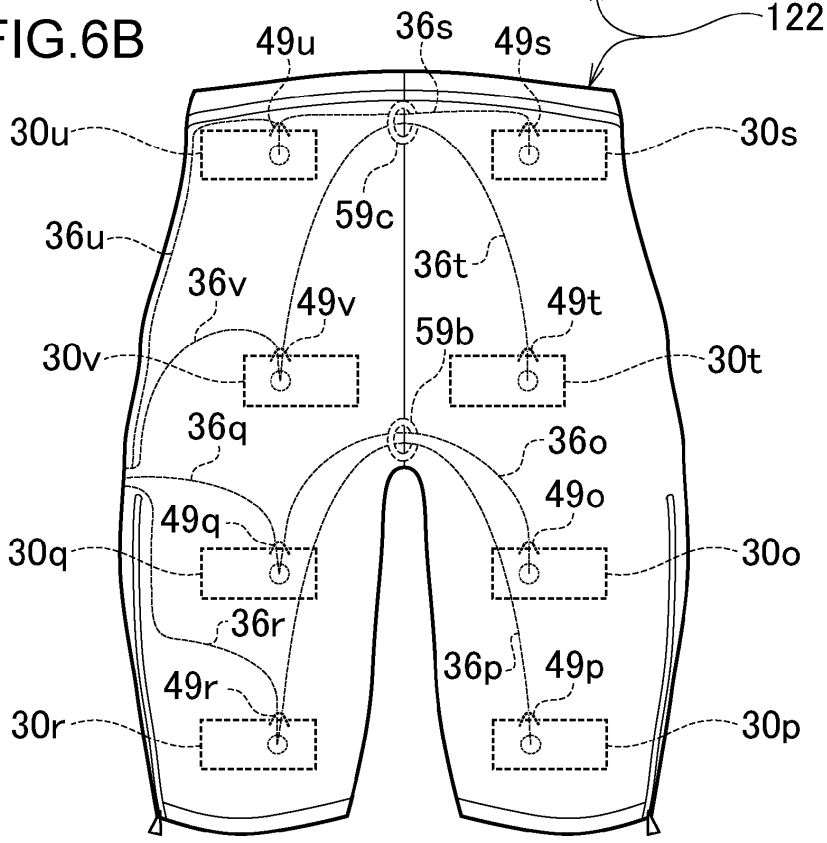
122
49u
36s
49s
30u
30s
59c
36u
36t
36v
49v
49t
59b
30v
30t
36q
36o
49o
49q
30q
30o
36r
36p
49p
49r
30r
30p

FIG.7

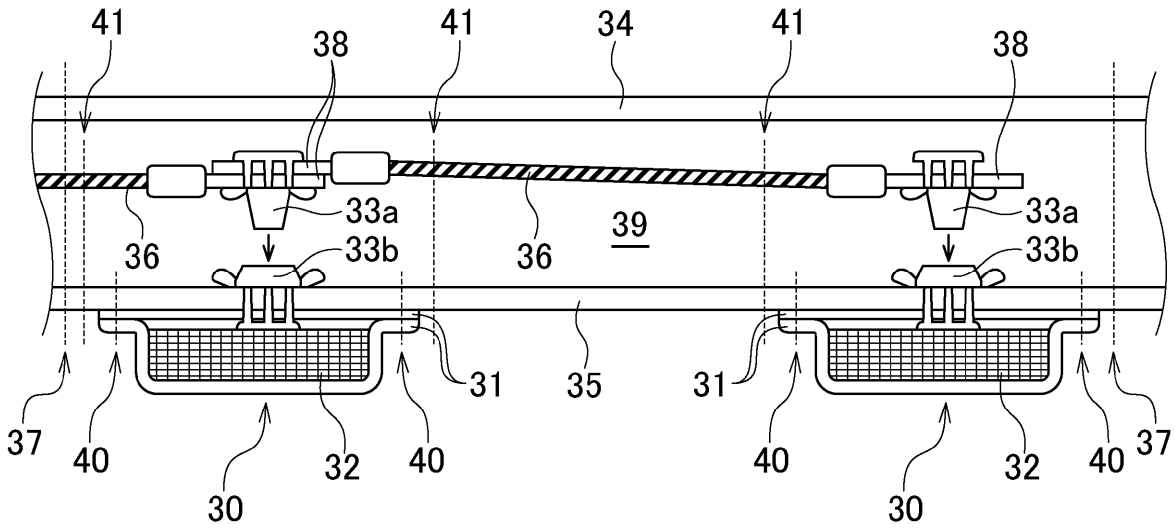
41
38
41
34
41
38
33a
33b
36
36
39
33a
33b
31
35
31
37
40
30
32
40
40
30
32
40
37

FIG.8

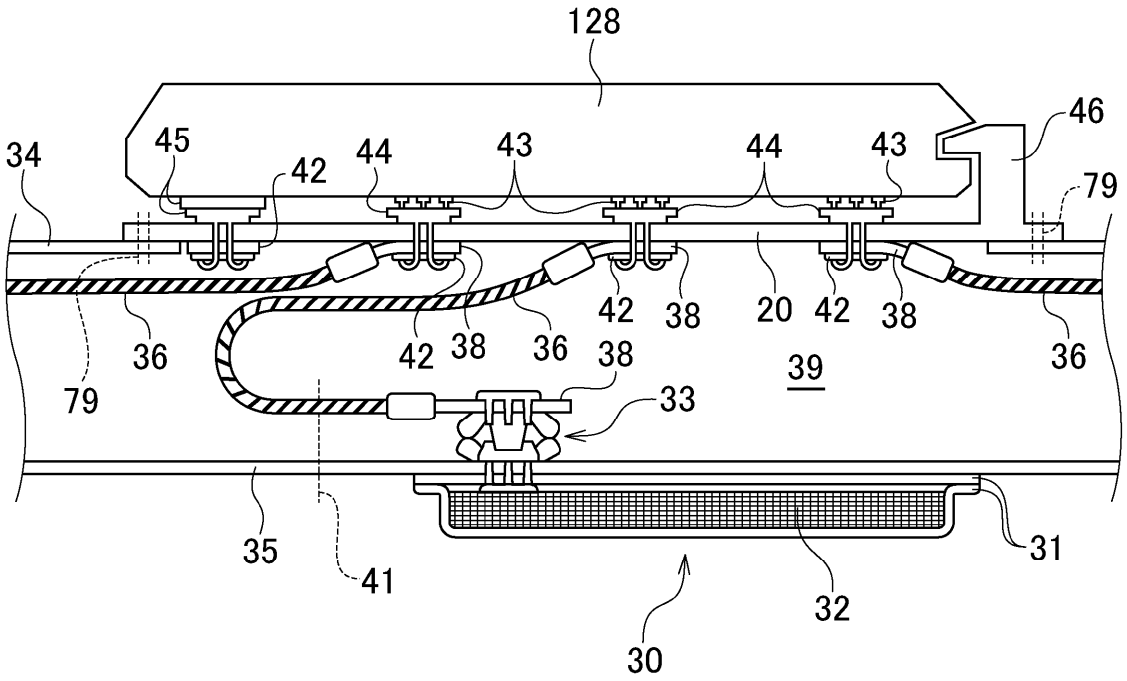
128
46
45
44
43
44
43
34
42
79
36
42
38
36
38
42
38
20
42
38
36
79
39
33
35
41
31
32
30

FIG.9A

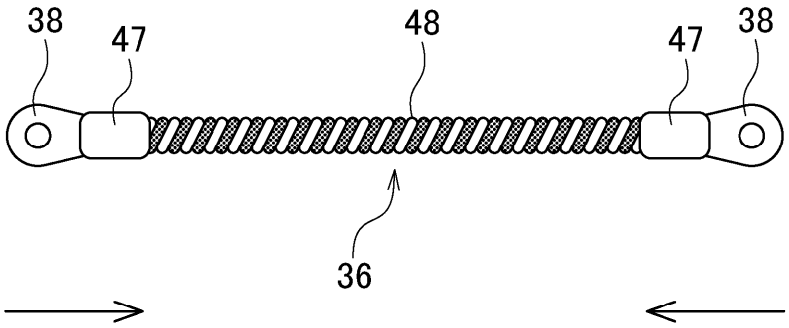

FIG.9B

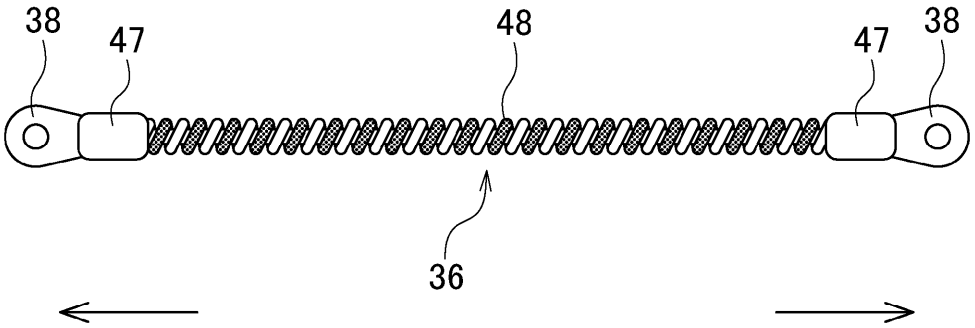

FIG.10

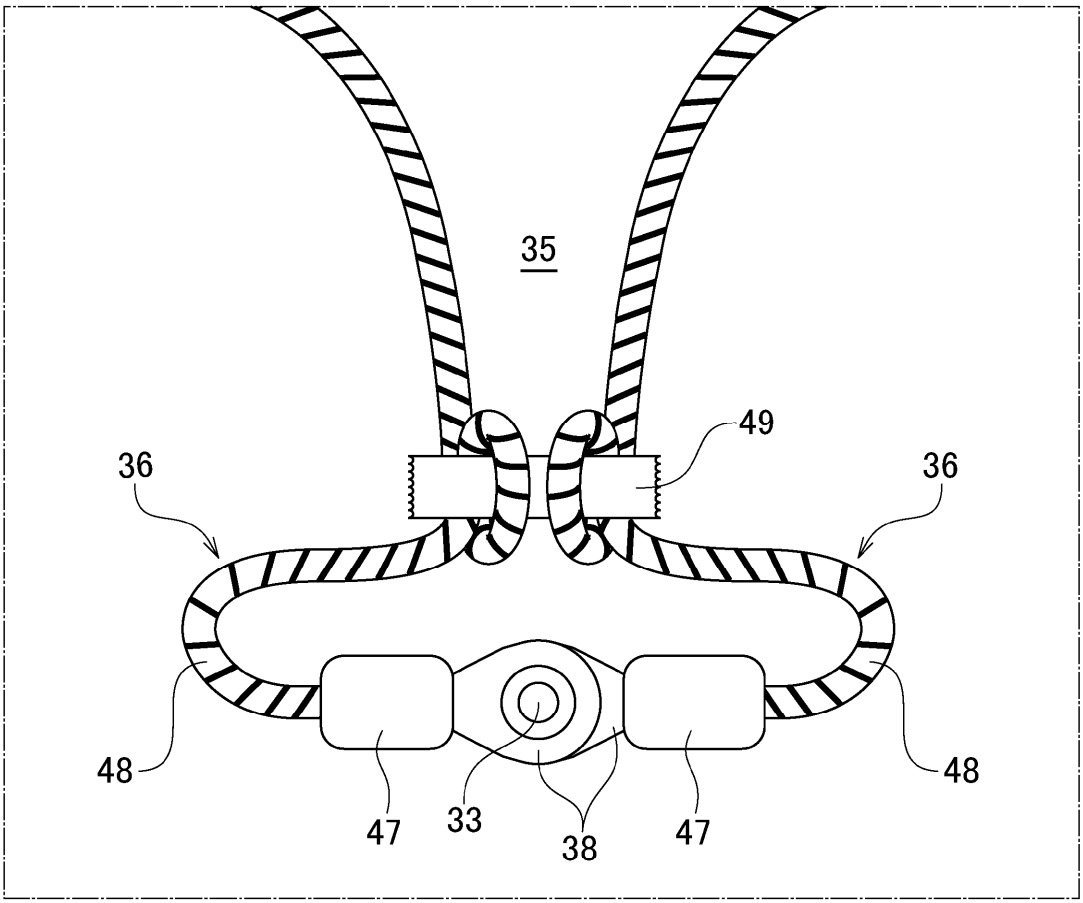

FIG.11A

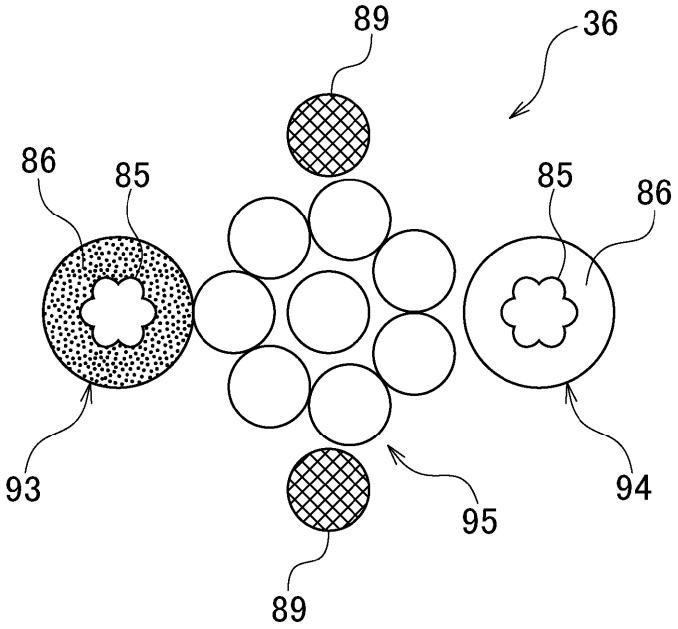

FIG.11B

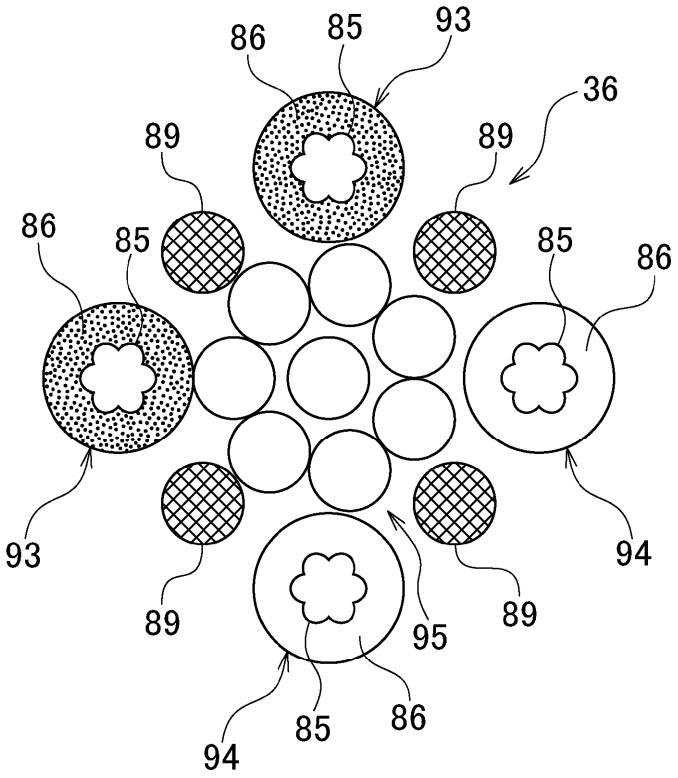

FIG.12A

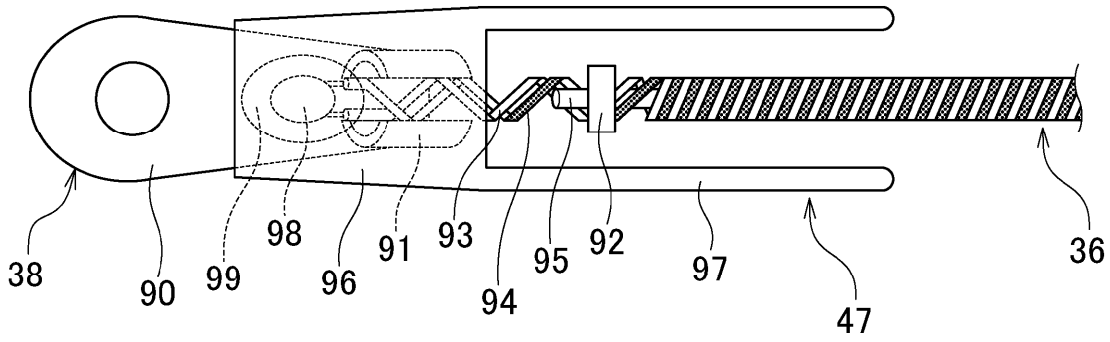

FIG.12B

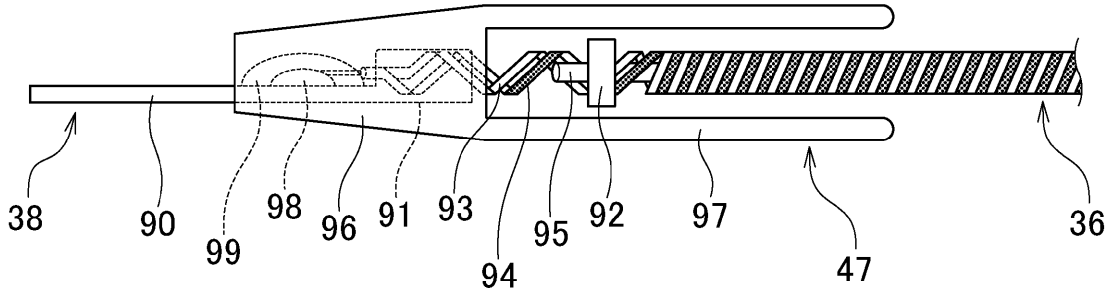

FIG.13

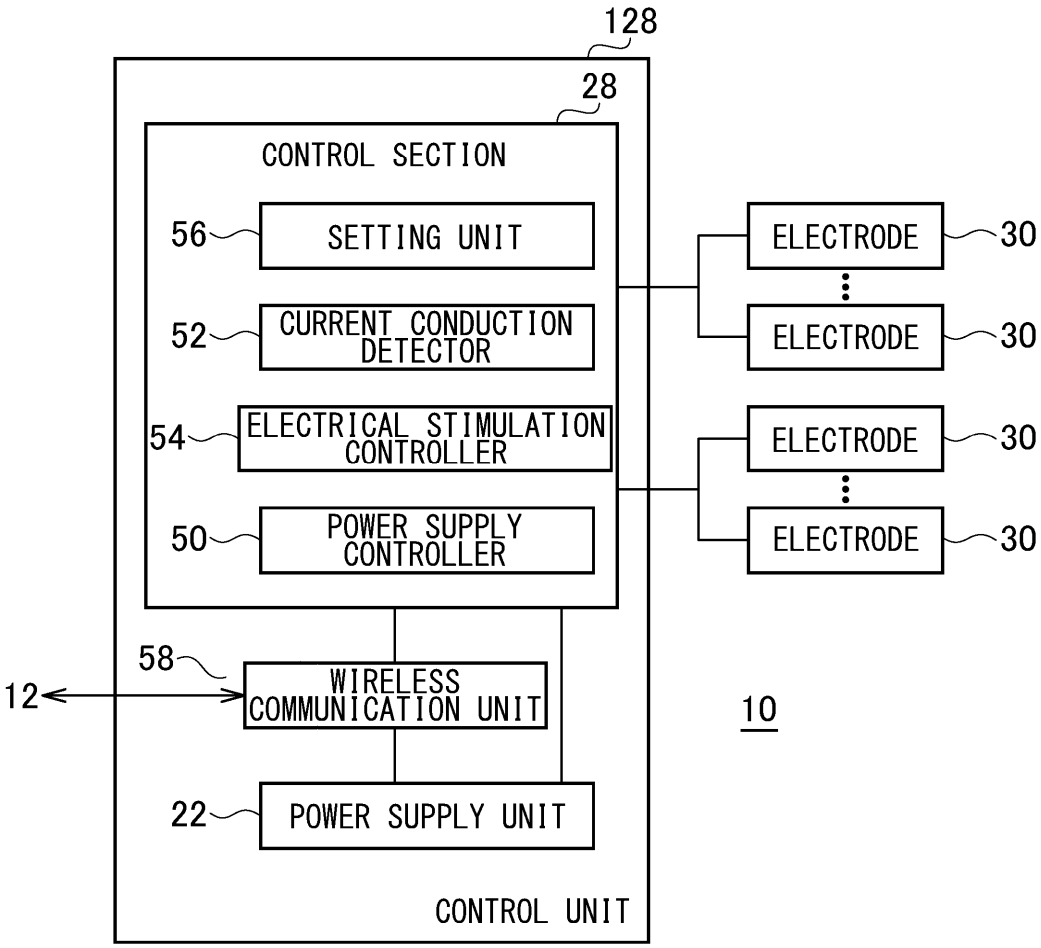
128
28
CONTROL SECTION
56
SETTING UNIT
52
CURRENT CONDUCTION DETECTOR
54
ELECTRICAL STIMULATION CONTROLLER
50
POWER SUPPLY CONTROLLER
58
WIRELESS COMMUNICATION UNIT
12
22
POWER SUPPLY UNIT
CONTROL UNIT
ELECTRODE
30
ELECTRODE
30
ELECTRODE
30
ELECTRODE
30
10

FIG.14

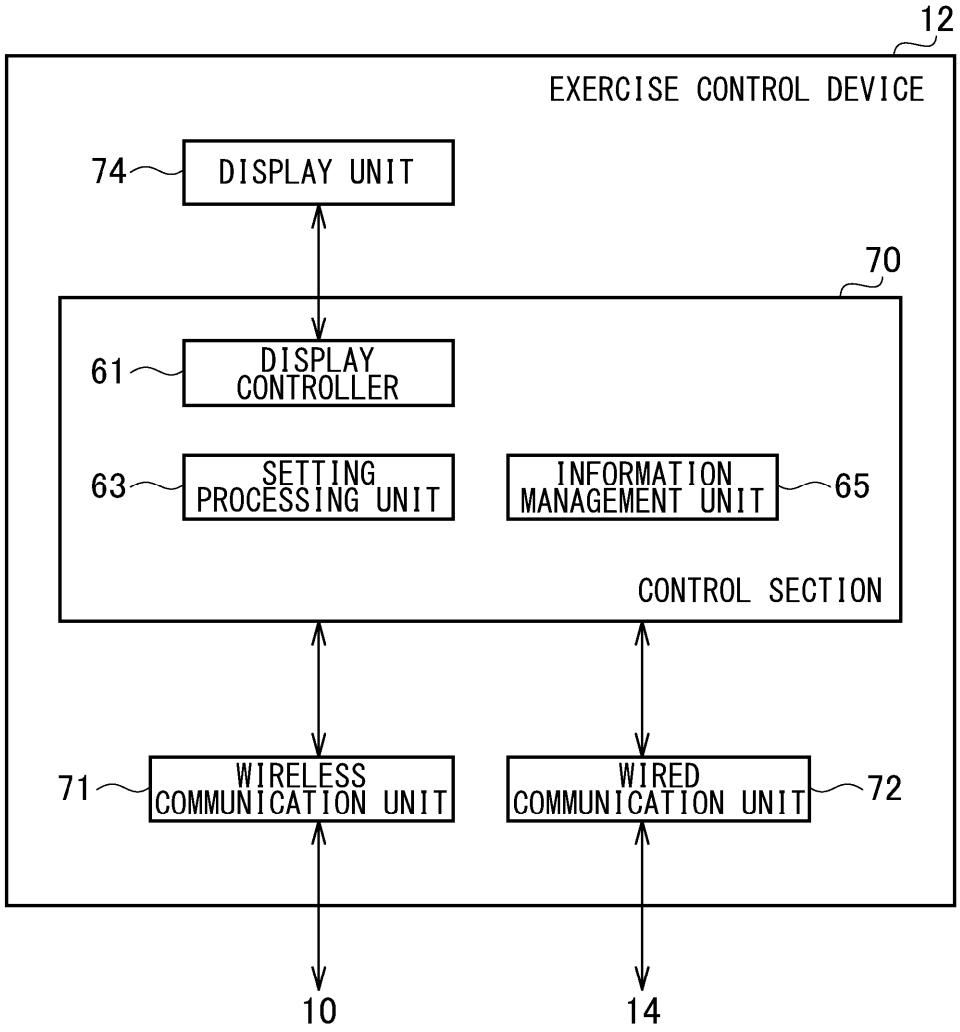
12
EXERCISE CONTROL DEVICE
74
DISPLAY UNIT
70
61
DISPLAY CONTROLLER
63
SETTING PROCESSING UNIT
INFORMATION MANAGEMENT UNIT
65
CONTROL SECTION
71
WIRELESS COMMUNICATION UNIT
WIRED COMMUNICATION UNIT
72
10
14

FIG.15A

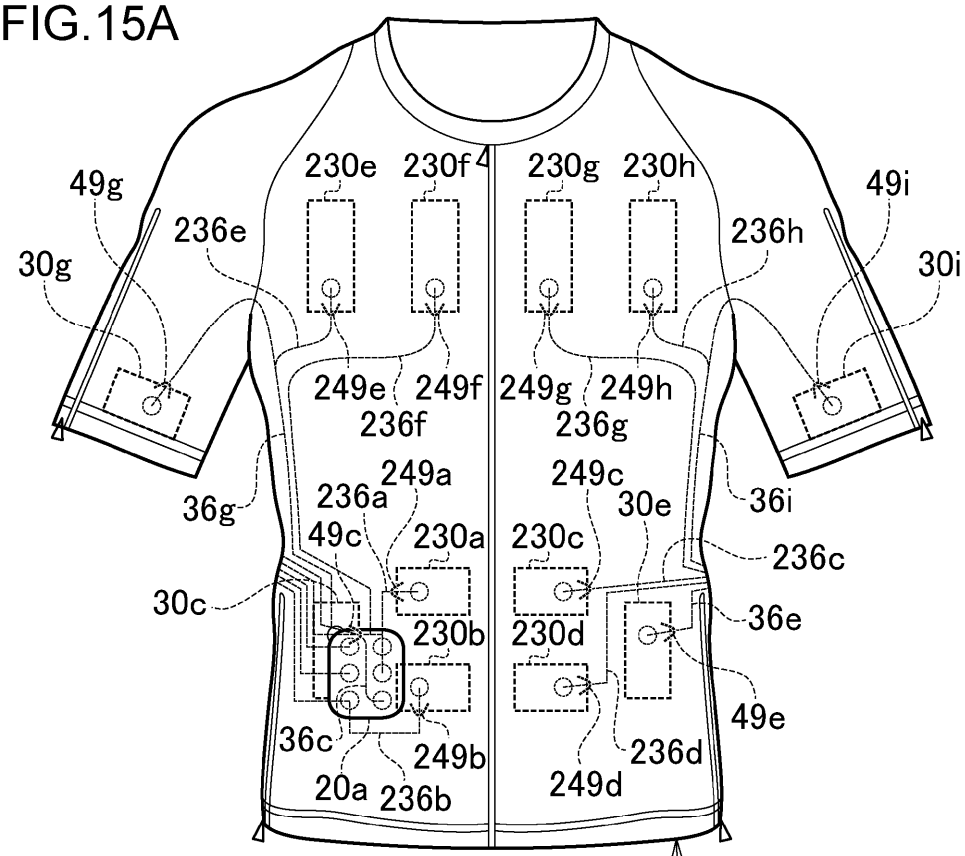

FIG.15B

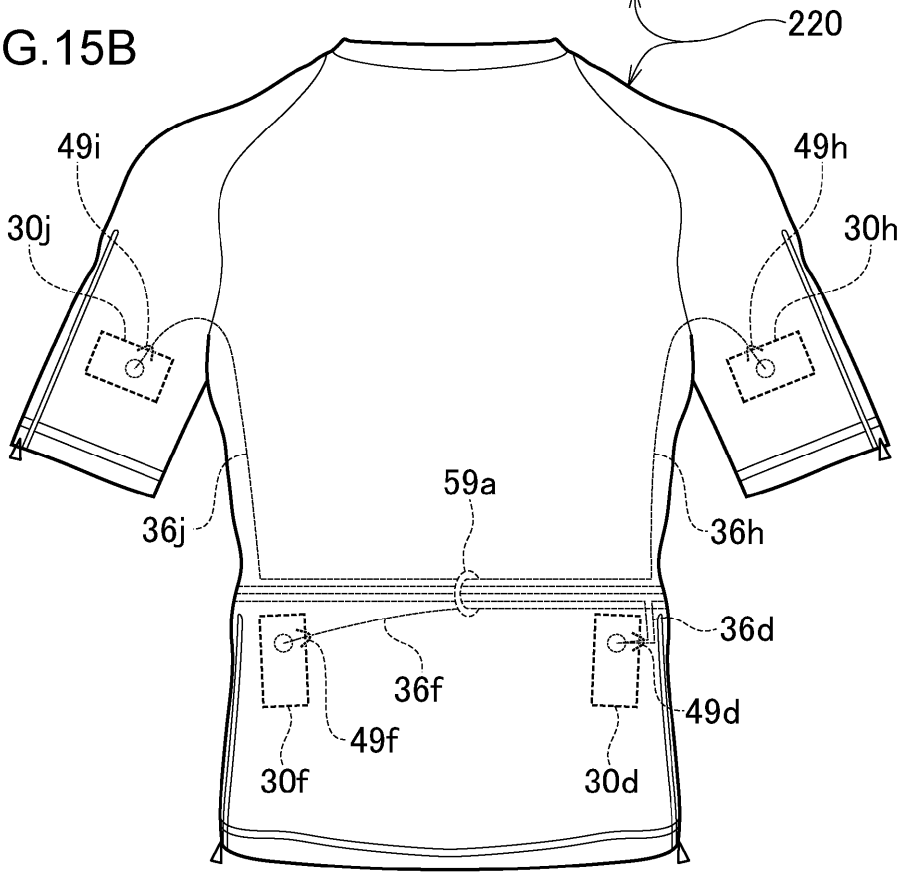

FIG.16

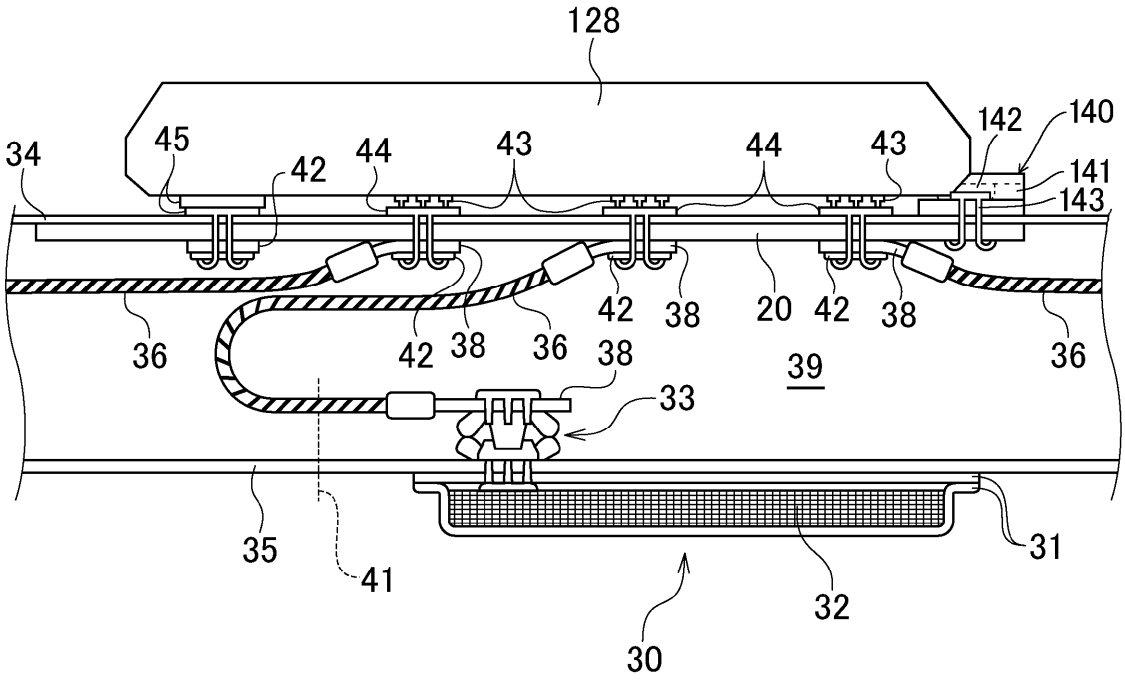
128
34
45
42
44
43
44
43
142
140
141
143
36
42
38
36
38
42
38
20
42
38
36
39
33
35
41
31
32
30

FIG.17

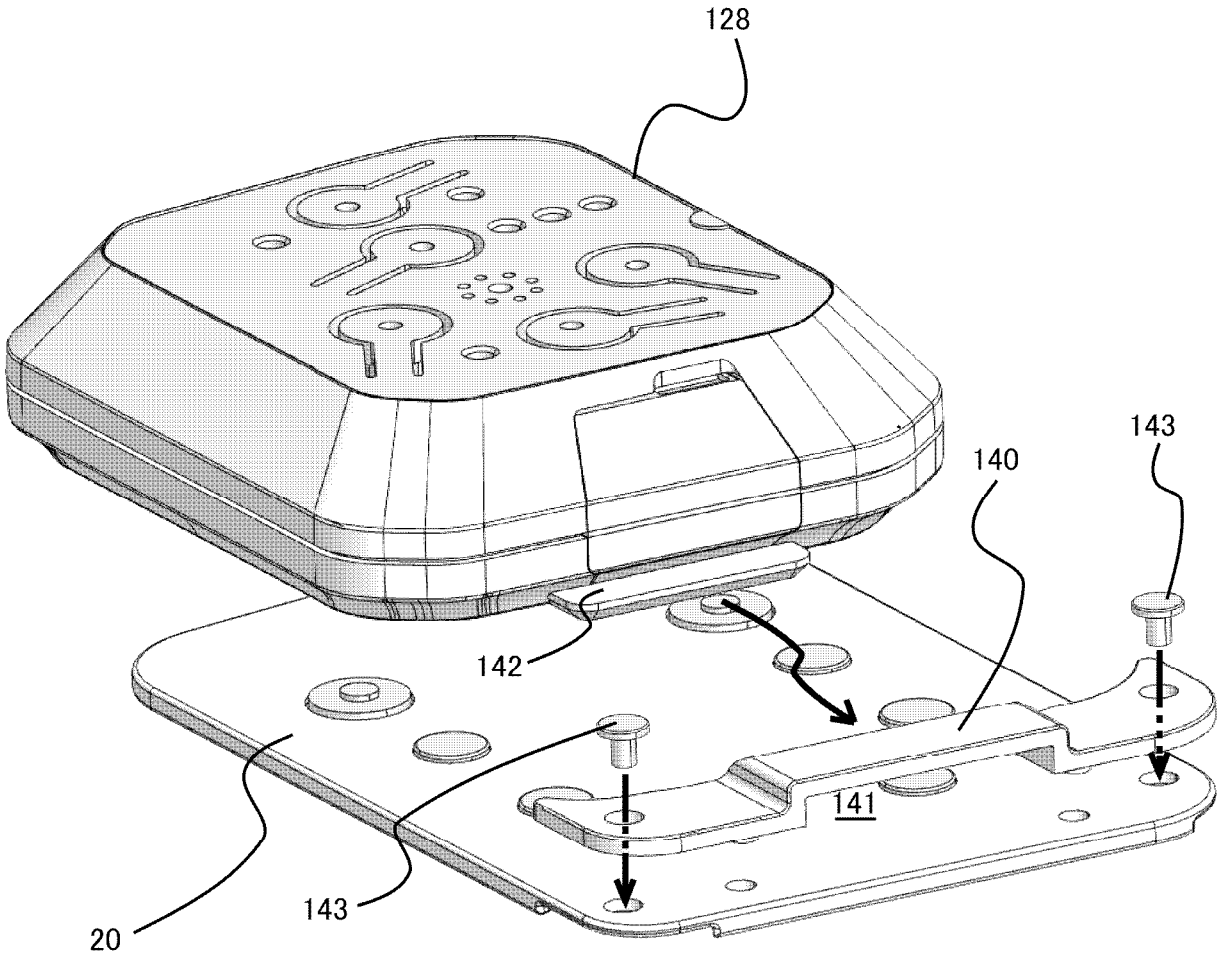

FIG.18A

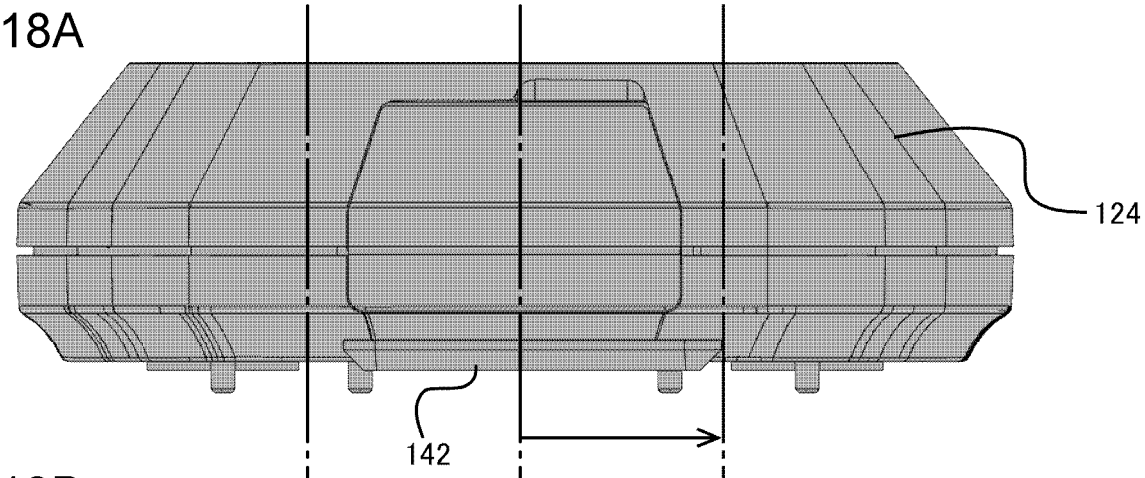

FIG.18B

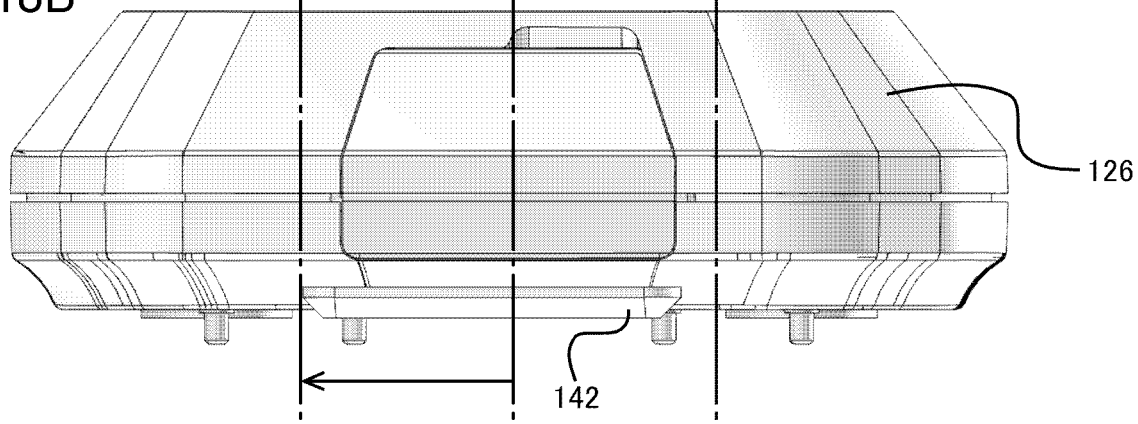

FIG.18C

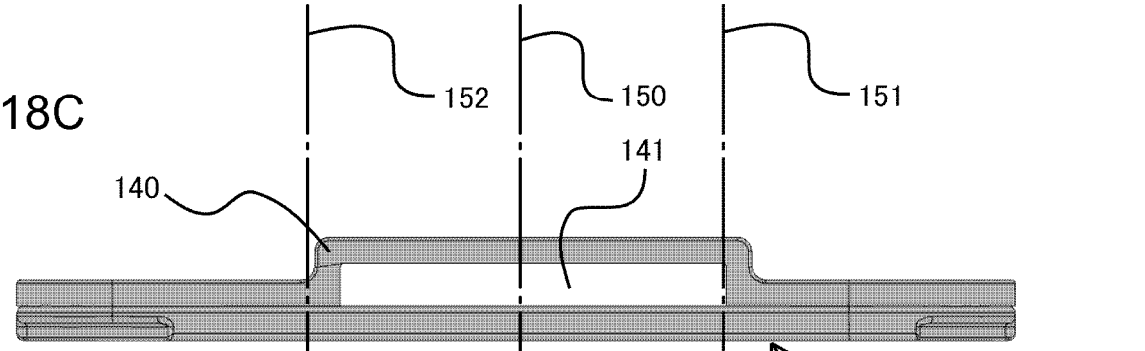

FIG.18D

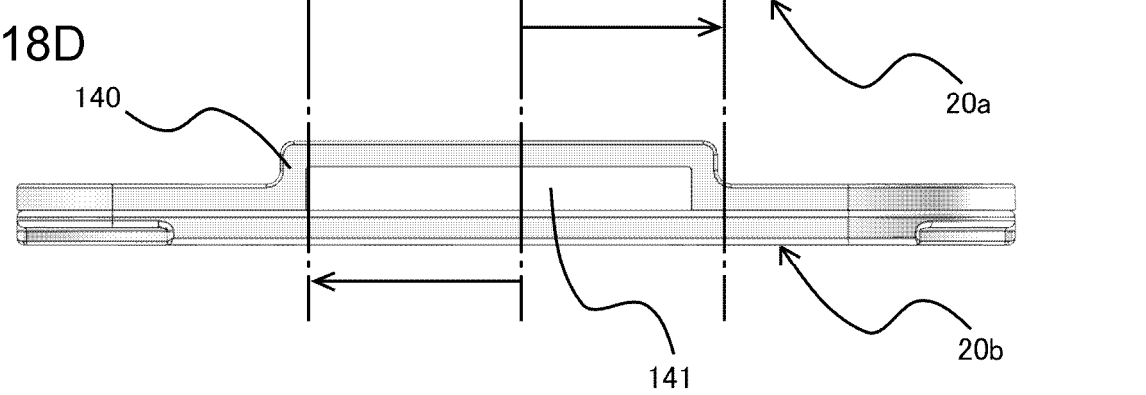

FIG.19

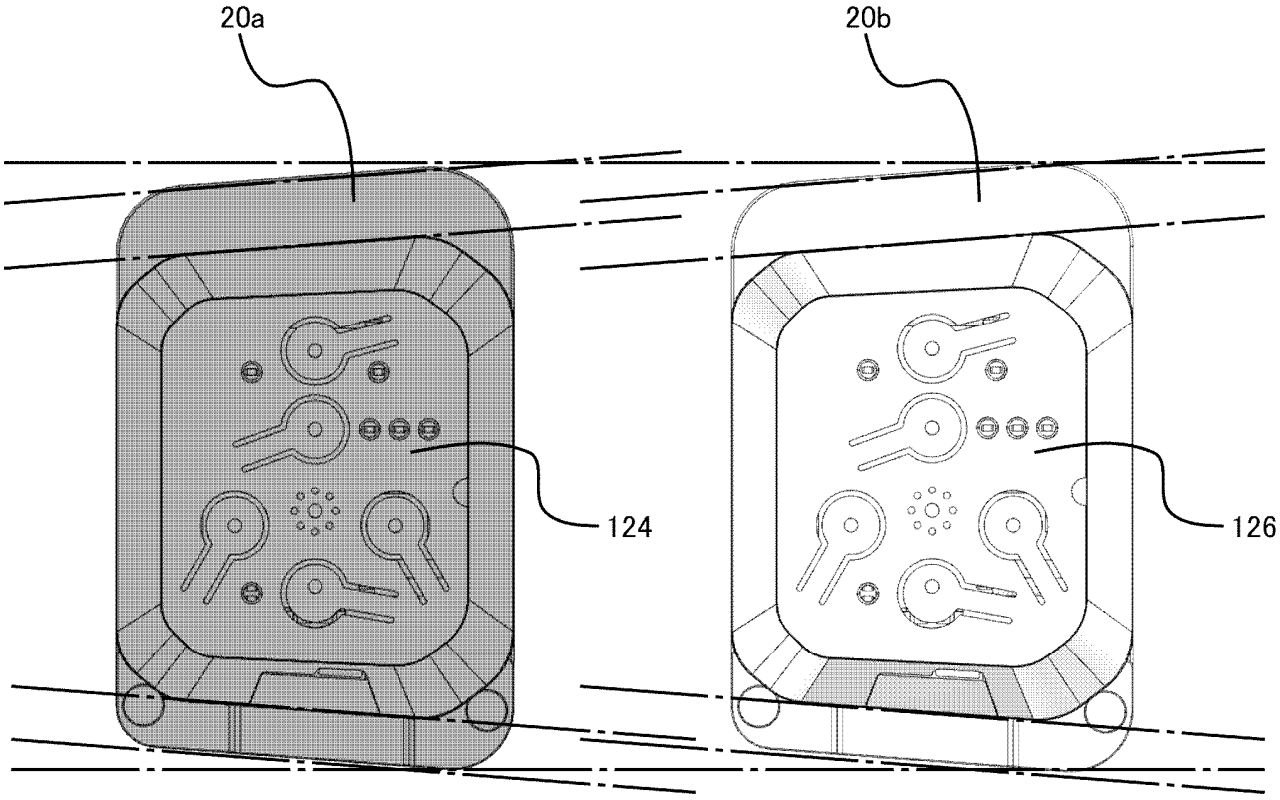

FIG.20

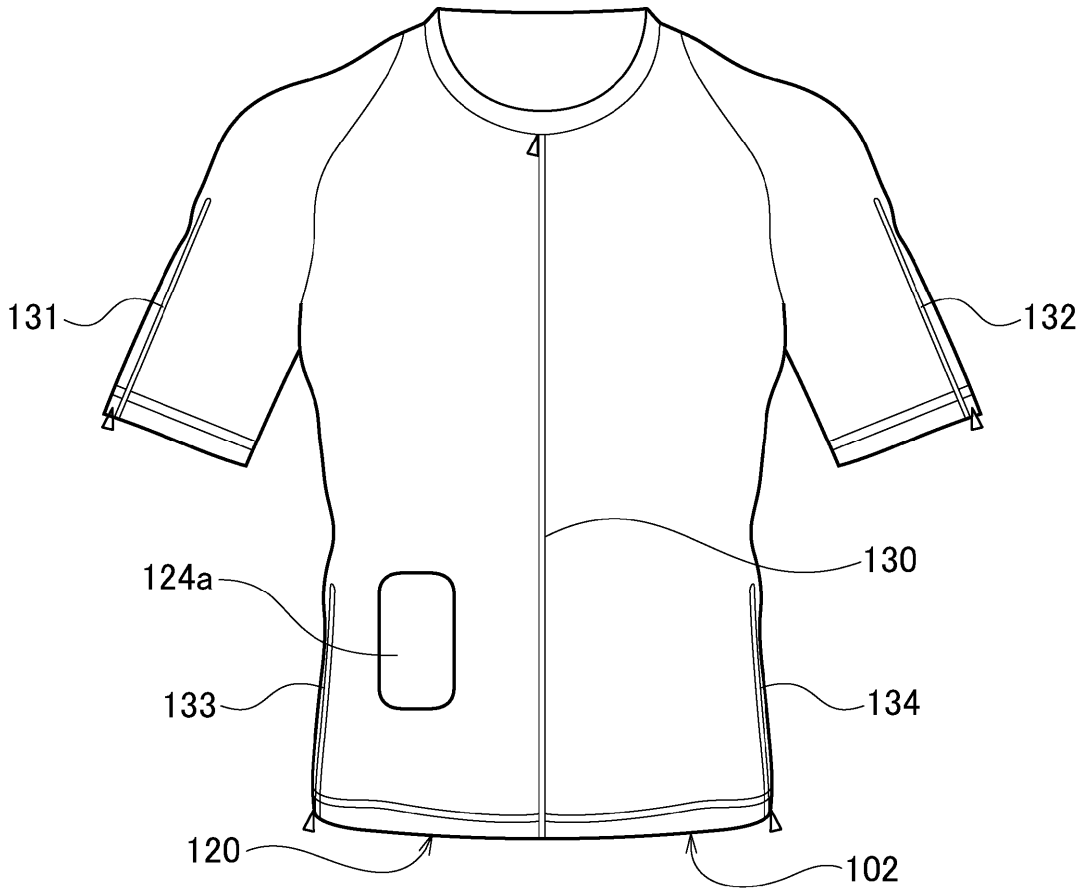

FIG.21

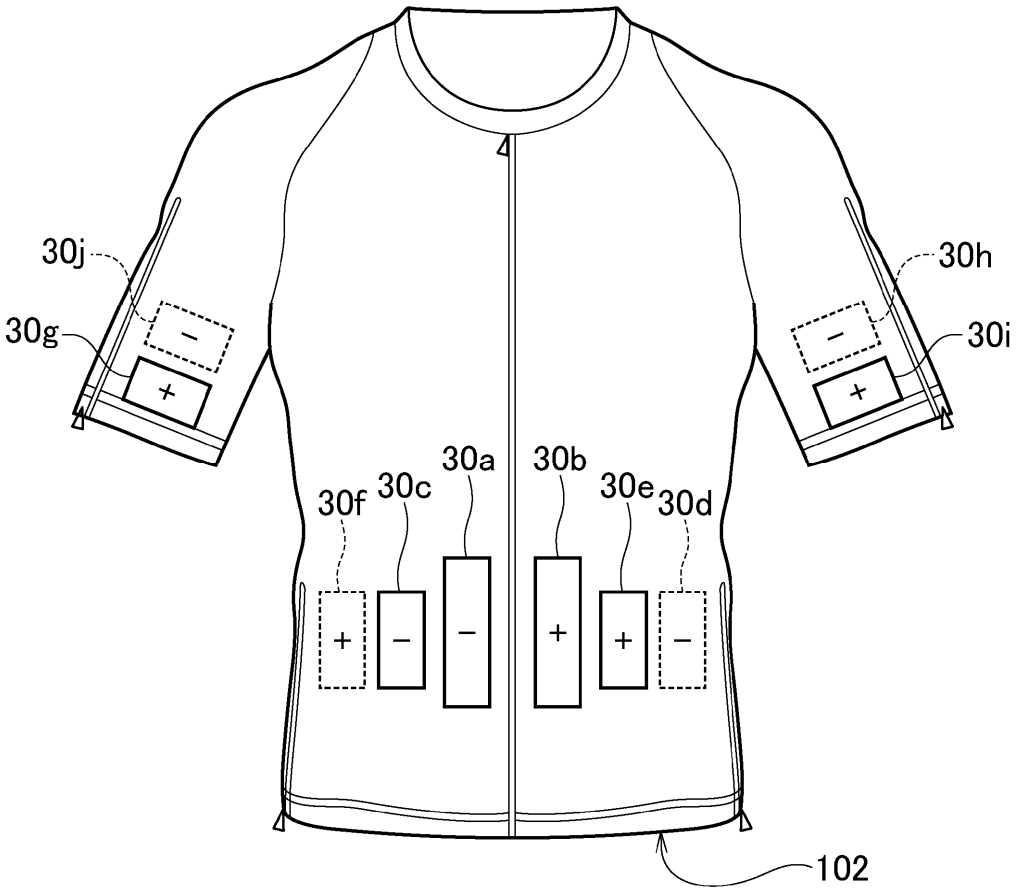

FIG.22

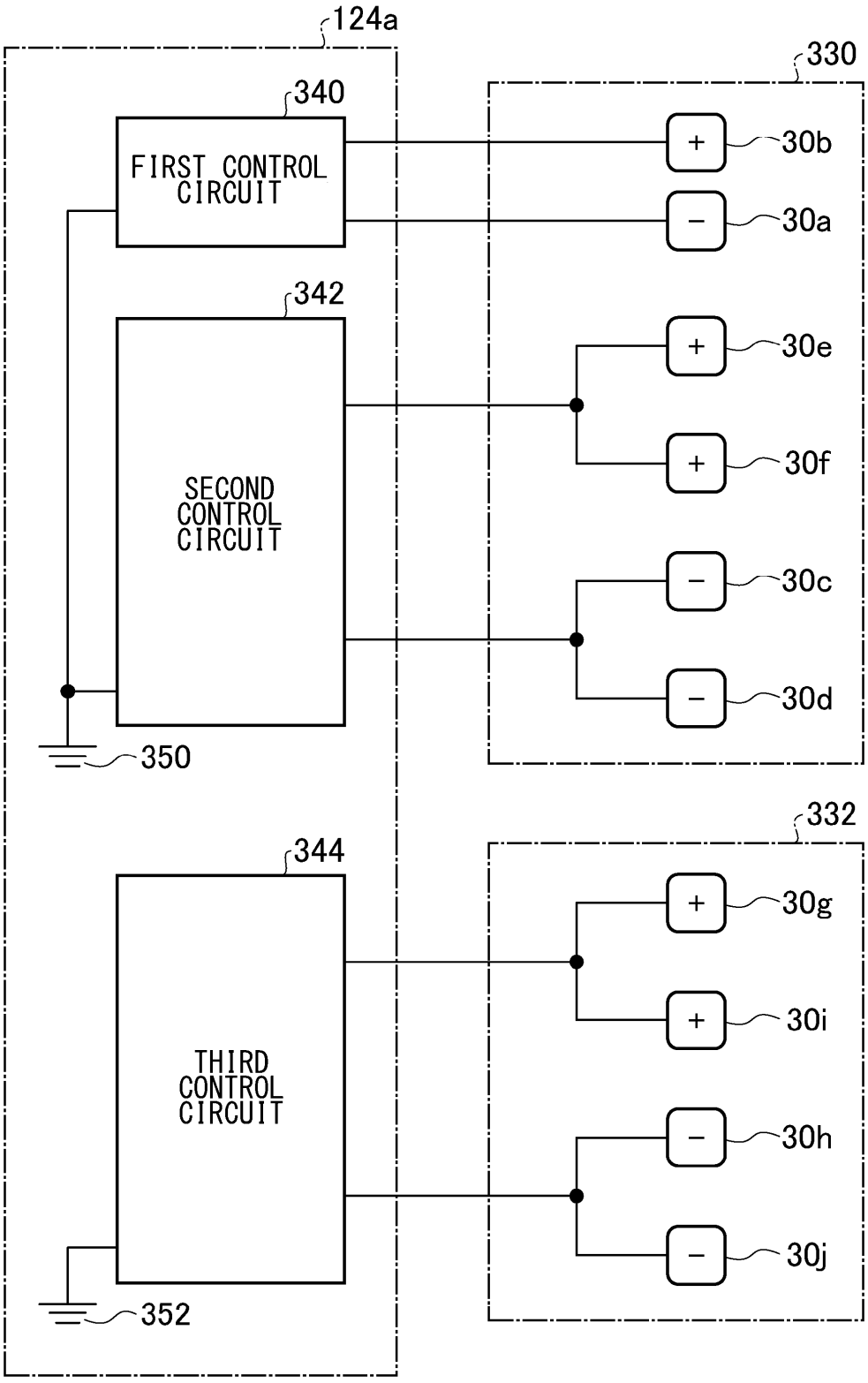
124a
330
340
FIRST CONTROL CIRCUIT
342
SECOND CONTROL CIRCUIT
350
344
THIRD CONTROL CIRCUIT
352
332
+
30b
−
30a
+
30e
+
30f
−
30c
−
30d
+
30g
+
30i
−
30h
−
30j

FIG.23

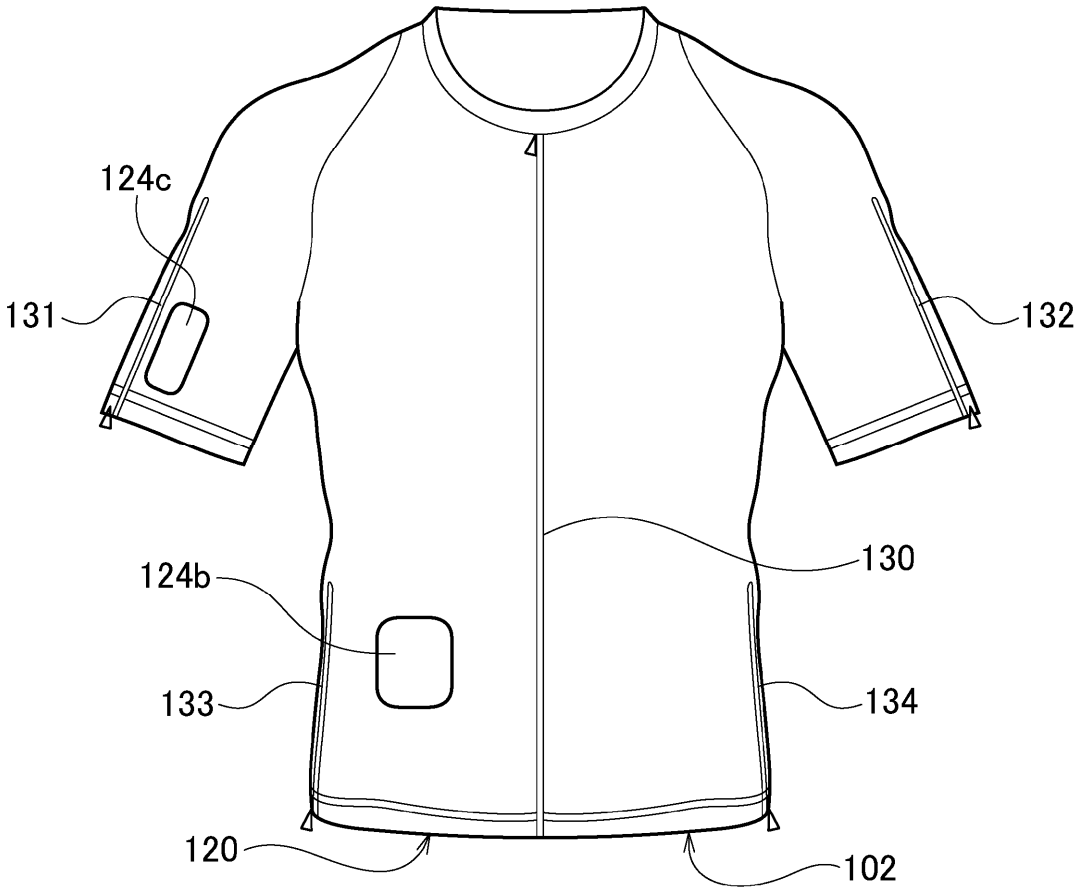

FIG.24

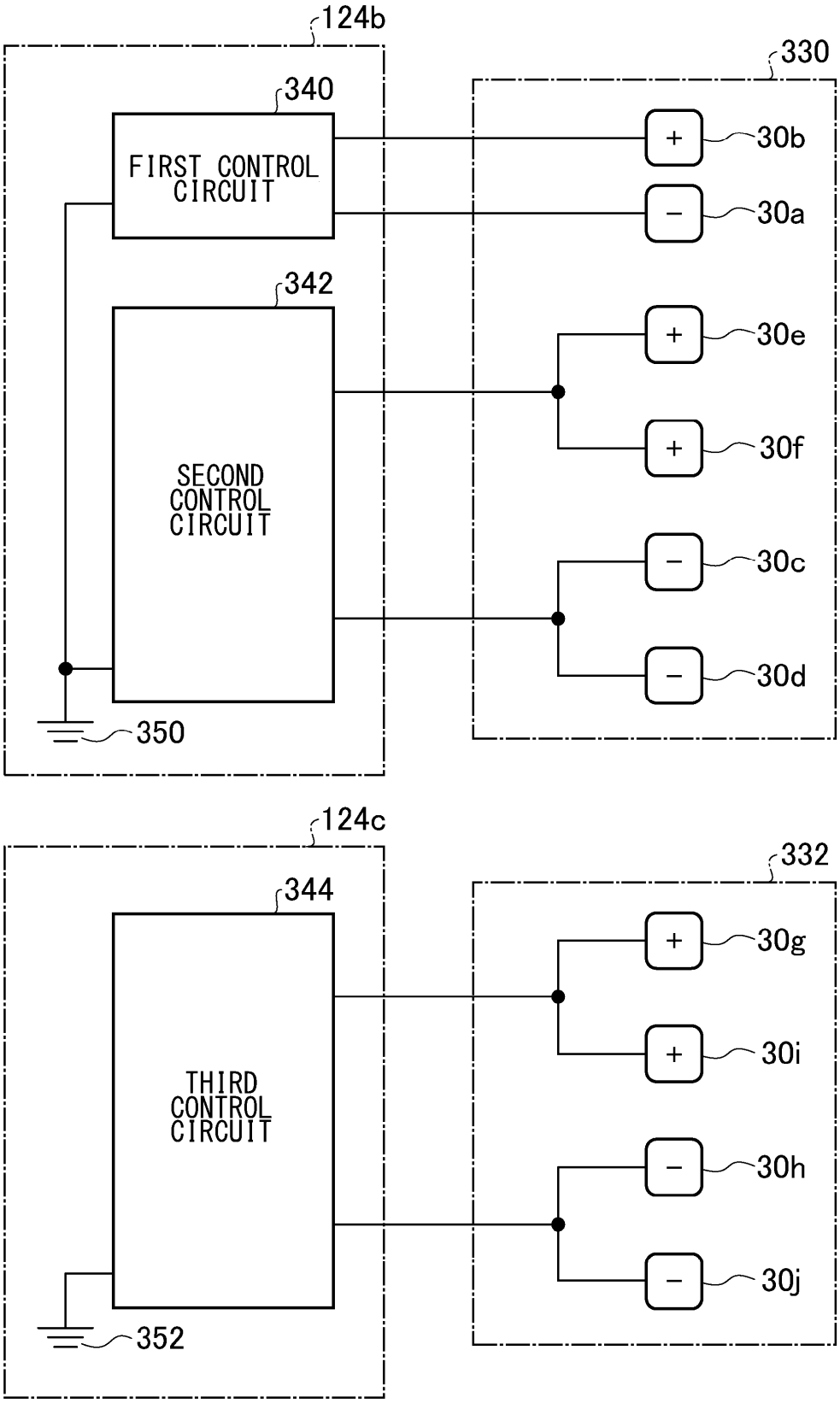
124b
330
340
FIRST CONTROL CIRCUIT
342
SECOND CONTROL CIRCUIT
350
+
30b
−
30a
+
30e
+
30f
−
30c
−
30d
124c
332
344
THIRD CONTROL CIRCUIT
352
+
30g
+
30i
−
30h
−
30j

FIG.25

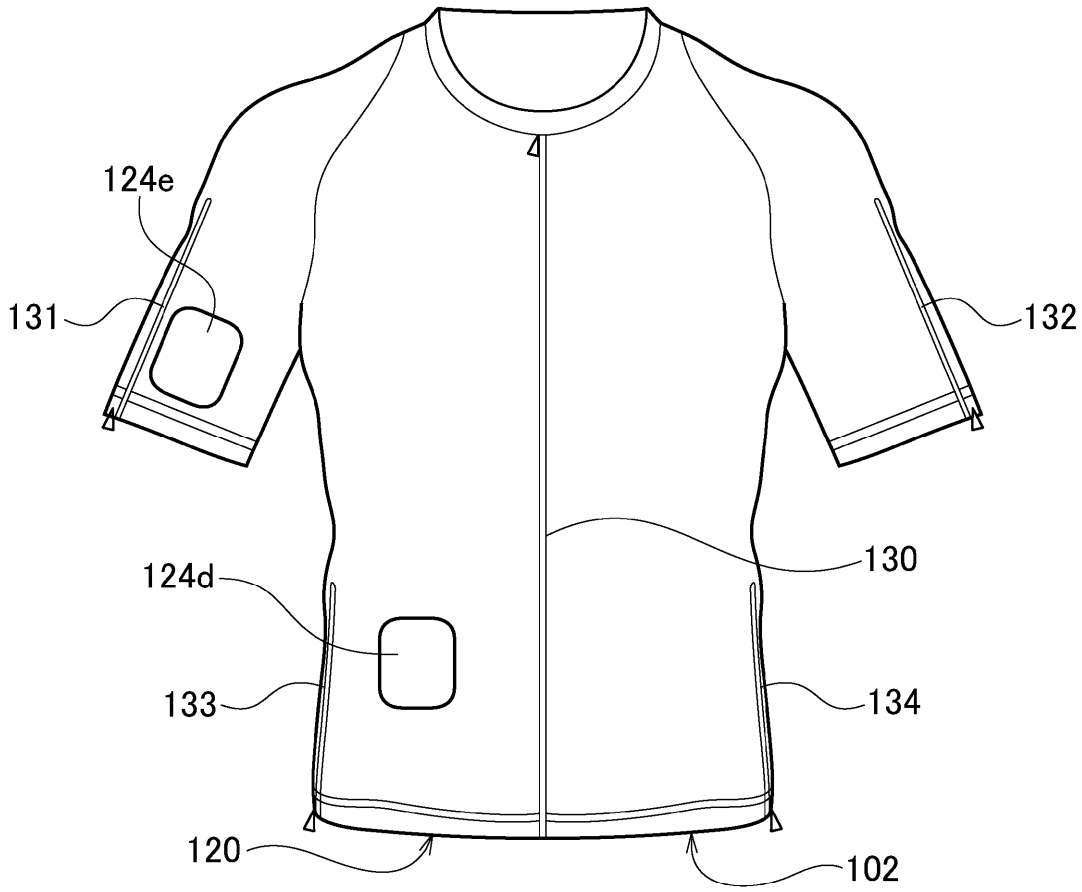

FIG.26

