(12) INTERNATIONAL APPLICATION PUBLISHED UNDER THE PATENT COOPERATION TREATY (PCT)

(19) World Intellectual Property Organization
International Bureau

(43) International Publication Date
5 May 2011 (05.05.2011)

PCT

(10) International Publication Number
WO 2011/053152 A3

(51) International Patent Classification:
B07B 1/46 (2006.01) *F16B 21/06* (2006.01)

(21) International Application Number:
PCT/NO2010/000384

(22) International Filing Date:
27 October 2010 (27.10.2010)

(25) Filing Language: English

(26) Publication Language: English

(30) Priority Data:
61/255,356 27 October 2009 (27.10.2009) US
NO20093231 27 October 2009 (27.10.2009) NO

(71) Applicant *(for all designated States except US)*: **OPTIPRO AS** [NO/NO]; Vipeveien 8, N-6783 Stryn (NO).

(72) Inventor; and

(75) Inventor/Applicant *(for US only)*: **DAHL, Bjørn** [NO/NO]; Opheim, N-6789 Loen (NO).

(74) Agent: **FLUGES PATENT AS**; Postboks 27, N-1629 Gamle Fredrikstad (NO).

(81) Designated States *(unless otherwise indicated, for every kind of national protection available)*: AE, AG, AL, AM, AO, AT, AU, AZ, BA, BB, BG, BH, BR, BW, BY, BZ, CA, CH, CL, CN, CO, CR, CU, CZ, DE, DK, DM, DO, DZ, EC, EE, EG, ES, FI, GB, GD, GE, GH, GM, GT, HN, HR, HU, ID, IL, IN, IS, JP, KE, KG, KM, KN, KP, KR, KZ, LA, LC, LK, LR, LS, LT, LU, LY, MA, MD, ME, MG, MK, MN, MW, MX, MY, MZ, NA, NG, NI, NO, NZ, OM, PE, PG, PH, PL, PT, RO, RS, RU, SC, SD, SE, SG, SK, SL, SM, ST, SV, SY, TH, TJ, TM, TN, TR, TT, TZ, UA, UG, US, UZ, VC, VN, ZA, ZM, ZW.

(84) Designated States *(unless otherwise indicated, for every kind of regional protection available)*: ARIPO (BW, GH, GM, KE, LR, LS, MW, MZ, NA, SD, SL, SZ, TZ, UG, ZM, ZW), Eurasian (AM, AZ, BY, KG, KZ, MD, RU, TJ, TM), European (AL, AT, BE, BG, CH, CY, CZ, DE, DK, EE, ES, FI, FR, GB, GR, HR, HU, IE, IS, IT, LT, LU, LV, MC, MK, MT, NL, NO, PL, PT, RO, RS, SE, SI, SK, SM, TR), OAPI (BF, BJ, CF, CG, CI, CM, GA, GN, GQ, GW, ML, MR, NE, SN, TD, TG).

Published:

— *with international search report (Art. 21(3))*

— *before the expiration of the time limit for amending the claims and to be republished in the event of receipt of amendments (Rule 48.2(h))*

(88) Date of publication of the international search report:
3 November 2011

(54) Title: AN IMPROVED SHAKER SCREEN FILTER FOR A DRILLING FLUID SHAKER

Fig. 5a

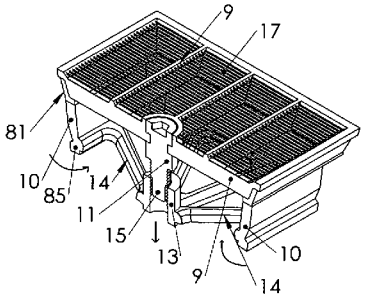

Fig. 5b

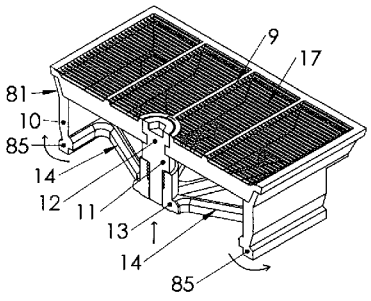

(57) Abstract: The invention relates to an improved cell plug filter (8) for a shaker screen filter (2) with a main frame (1) for being mounted in a well fluid shale shaker (7). The cell plug filter (8) comprise a layer of screen cloth (20) on top of a support layer (18, 17) in a cell plug filter (8) comprising a cell plug filter frame (81) to be held in a cell frame (4) and comprises a pre-tensioned locking mechanism (10, 12, 13, 15) comprising a locking profile (85) for locking the cell plug filter frame (81) in the cell frame (4). The locking mechanism (85, 10, 12, 13, 15) comprises a displacement mechanism (12, 13, 14) for unlocking by moving the locking profile (85) out of engagement with the edge profile (5) of the cell frame (4) to releasing the cell plug filter frame (81) from the cell frame (4).

WO 2011/053152 A3