(12) INTERNATIONAL APPLICATION PUBLISHED UNDER THE PATENT COOPERATION TREATY (PCT)

(19) World Intellectual Property Organization
International Bureau

(43) International Publication Date
22 September 2011 (22.09.2011)

PCT

(10) International Publication Number
WO 2011/115505 A3

(51) International Patent Classification:
B63B 21/50 (2006.01)

(21) International Application Number:
PCT/NO2011/000089

(22) International Filing Date:
17 March 2011 (17.03.2011)

(25) Filing Language: English

(26) Publication Language: English

(30) Priority Data:
20100418 19 March 2010 (19.03.2010) NO

(71) Applicant *(for all designated States except US)*: **ADVANCED PRODUCTION AND LOADING AS** [NO/NO]; Vikaveien 85, NO-4816 Kolbjørnsvik (NO).

(72) Inventor; and

(75) Inventor/Applicant *(for US only)*: **ASKESTAD, Sigmund** [NO/NO]; Grønland, NO-4900 Tvedestrand (NO).

(74) Agent: **TANDBERGS PATENTKONTOR AS**; P.O. Box 1570 Vika, NO-0118 Oslo (NO).

(81) Designated States *(unless otherwise indicated, for every kind of national protection available)*: AE, AG, AL, AM, AO, AT, AU, AZ, BA, BB, BG, BH, BR, BW, BY, BZ, CA, CH, CL, CN, CO, CR, CU, CZ, DE, DK, DM, DO, DZ, EC, EE, EG, ES, FI, GB, GD, GE, GH, GM, GT, HN, HR, HU, ID, IL, IN, IS, JP, KE, KG, KM, KN, KP, KR, KZ, LA, LC, LK, LR, LS, LT, LU, LY, MA, MD, ME, MG, MK, MN, MW, MX, MY, MZ, NA, NG, NI, NO, NZ, OM, PE, PG, PH, PL, PT, RO, RS, RU, SC, SD, SE, SG, SK, SL, SM, ST, SV, SY, TH, TJ, TM, TN, TR, TT, TZ, UA, UG, US, UZ, VC, VN, ZA, ZM, ZW.

(84) Designated States *(unless otherwise indicated, for every kind of regional protection available)*: ARIPO (BW, GH, GM, KE, LR, LS, MW, MZ, NA, SD, SL, SZ, TZ, UG, ZM, ZW), Eurasian (AM, AZ, BY, KG, KZ, MD, RU, TJ, TM), European (AL, AT, BE, BG, CH, CY, CZ, DE, DK, EE, ES, FI, FR, GB, GR, HR, HU, IE, IS, IT, LT, LU, LV, MC, MK, MT, NL, NO, PL, PT, RO, RS, SE, SI, SK, SM, TR), OAPI (BF, BJ, CF, CG, CI, CM, GA, GN, GQ, GW, ML, MR, NE, SN, TD, TG).

Published:

— *with international search report (Art. 21(3))*

— *before the expiration of the time limit for amending the claims and to be republished in the event of receipt of amendments (Rule 48.2(h))*

(88) Date of publication of the international search report:
17 November 2011

(54) Title: DEVICE FOR ROTATING TURNTABLE

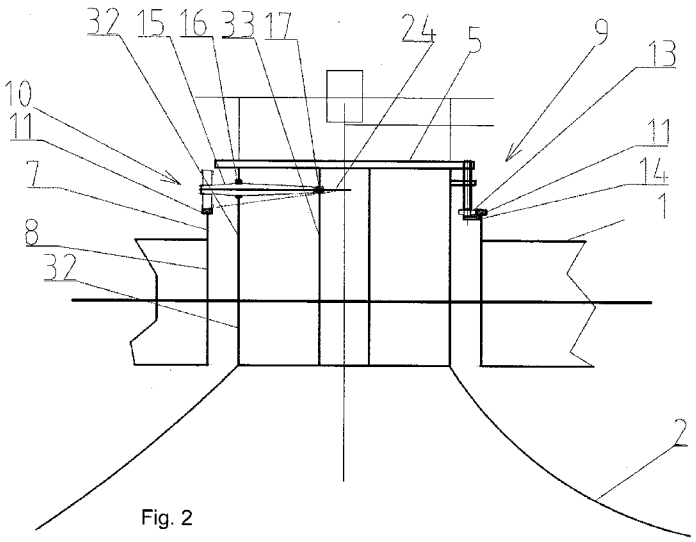

Fig. 2

(57) Abstract: A device for rotating turntable comprises a turret (5) and a turntable bearing (6, 7) for a drilling or production vessel (1) for recovery of oil offshore, the turret (5) is rotatable in a through-going opening or well (8) in the hull of the vessel and having axial and radial bearing assemblies arranged in a polar array about the turret centre line. In order to reduce the substantial wear caused by relative movements between the axial wheels (12) of the bearing assembly, including axial wheel shafts (15), and the circular rail (11) on the bearing support structure (7), the axial wheels (12) are conically shaped with a double curved surface rolling on the upward facing edge of the circular rail (11) with a slope aligned with an extension line (24) of the rail (11) substantially intersecting with the shaft centre line (34) at the centre line (35) of the turret (5). The radial bearing assembly includes horizontally arranged radial wheels (13) with double curved surface. Each wheel (13) is rolling on an inward facing edge of the circular rail (11).

WO 2011/115505 A3