Fig. 1

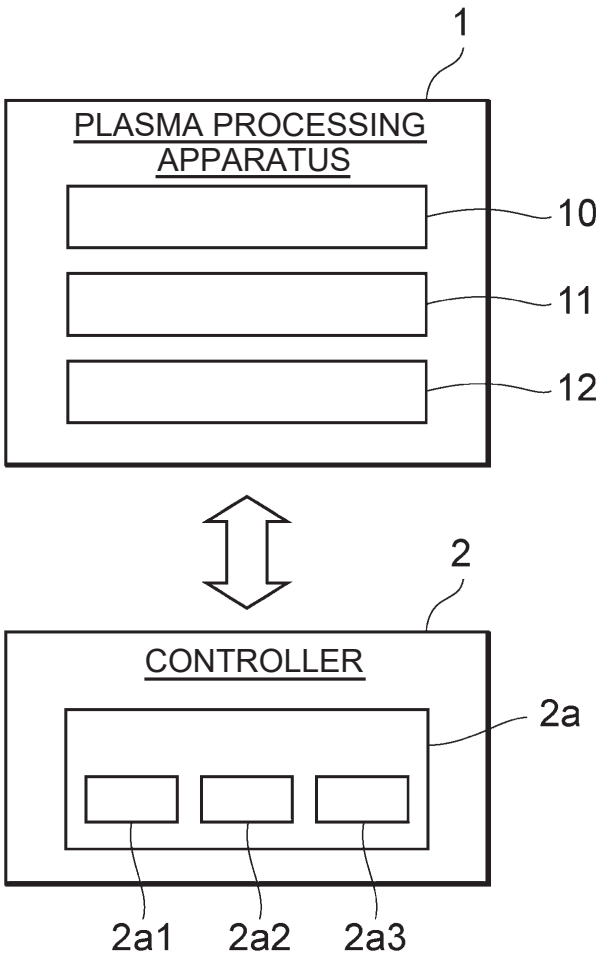
1
PLASMA PROCESSING APPARATUS
10
11
12
2
CONTROLLER
2a
2a1
2a2
2a3

Fig. 2

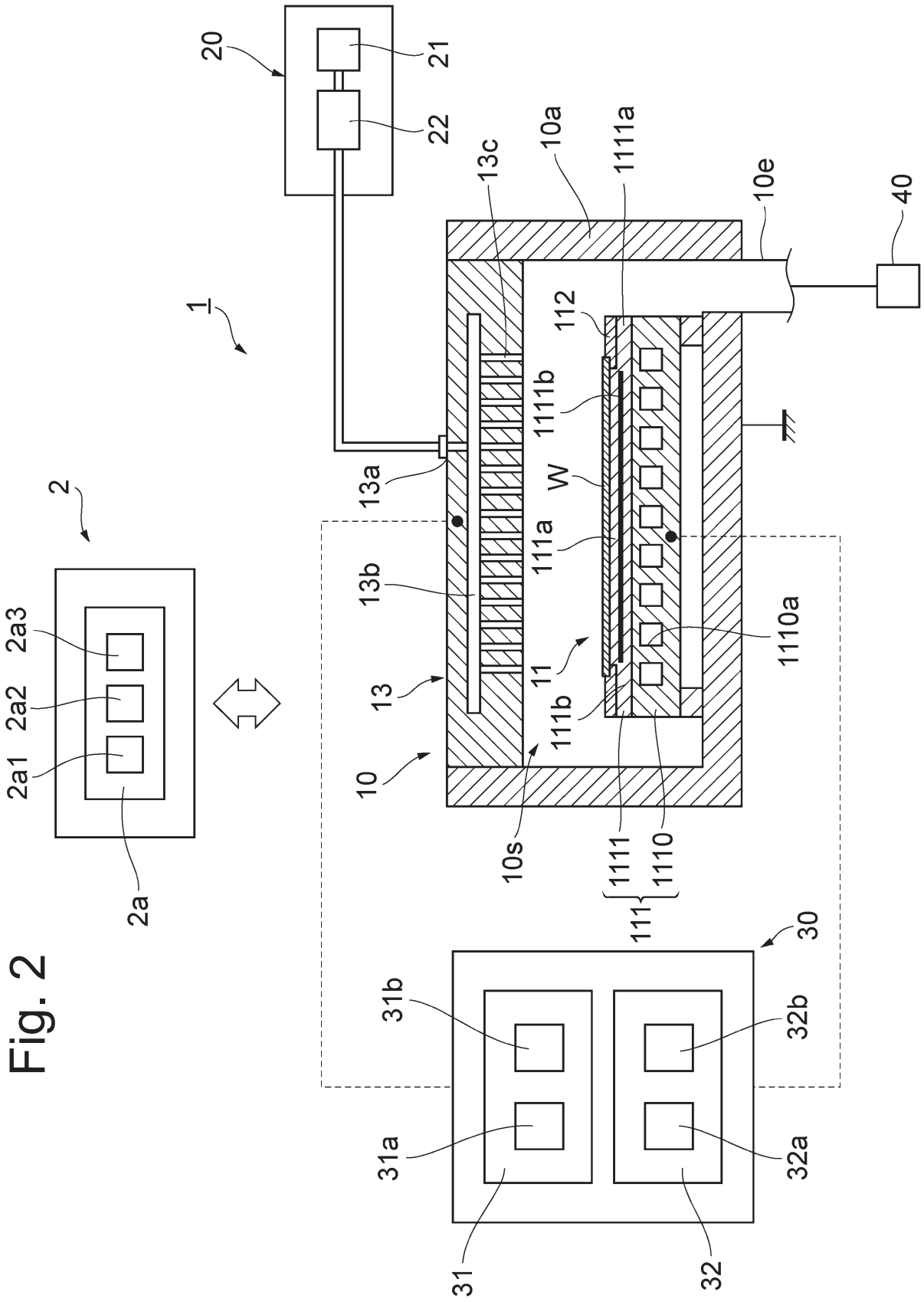
20
21
22
1
2
2a3
2a2
2a1
2a
13c
10a
1111a
10e
40
112
1111b
W
13a
111a
13b
13
11
1110a
111b
10
10s
1111
1110
111
30
31b
32b
31a
32a
31
32

Fig. 3

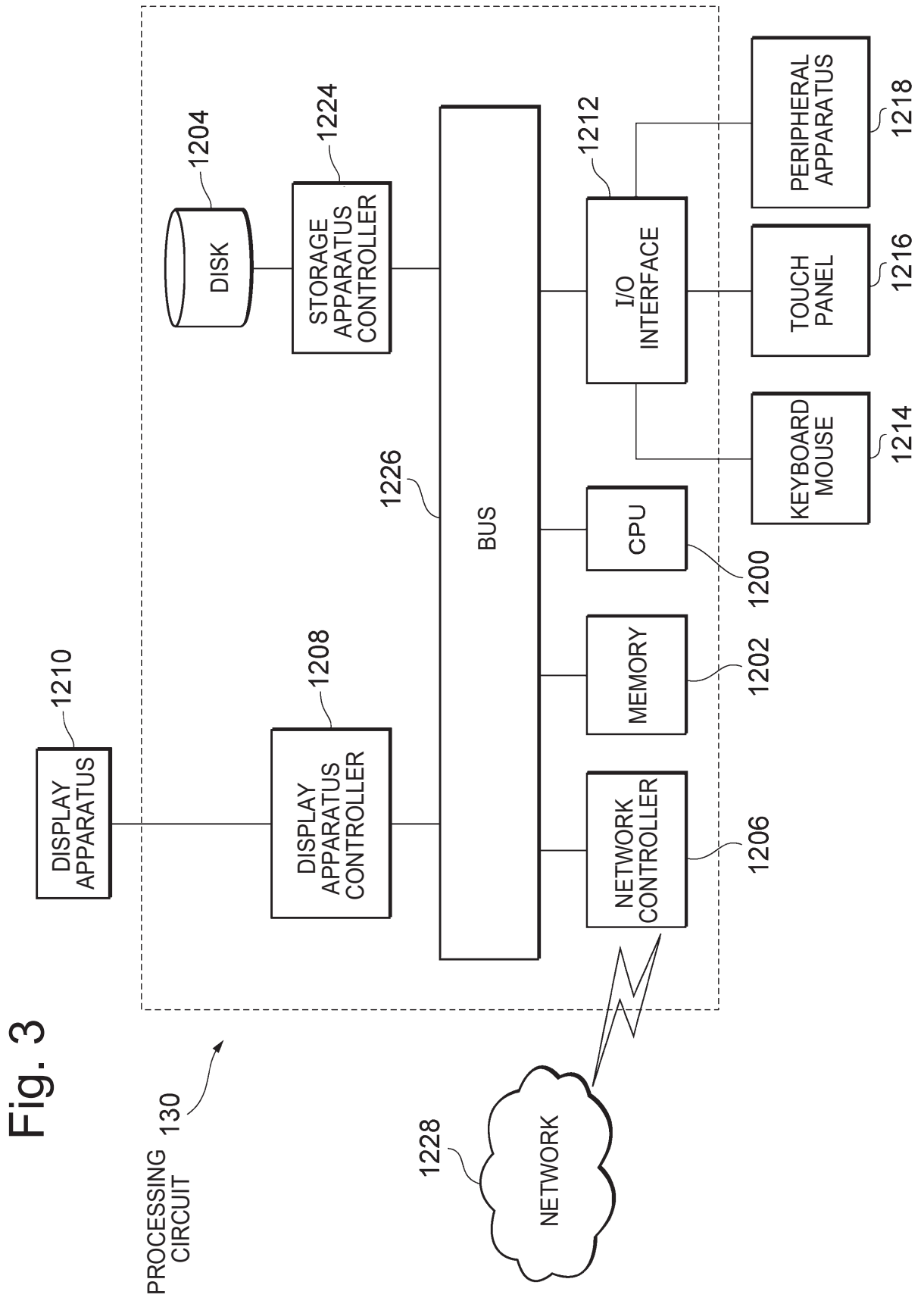
PROCESSING CIRCUIT
130
DISPLAY APPARATUS
1210
DISPLAY APPARATUS CONTROLLER
1208
DISK
1204
STORAGE APPARATUS CONTROLLER
1224
BUS
1226
I/O INTERFACE
1212
PERIPHERAL APPARATUS
1218
TOUCH PANEL
1216
KEYBOARD MOUSE
1214
CPU
1200
MEMORY
1202
NETWORK CONTROLLER
1206
NETWORK
1228

Fig. 4

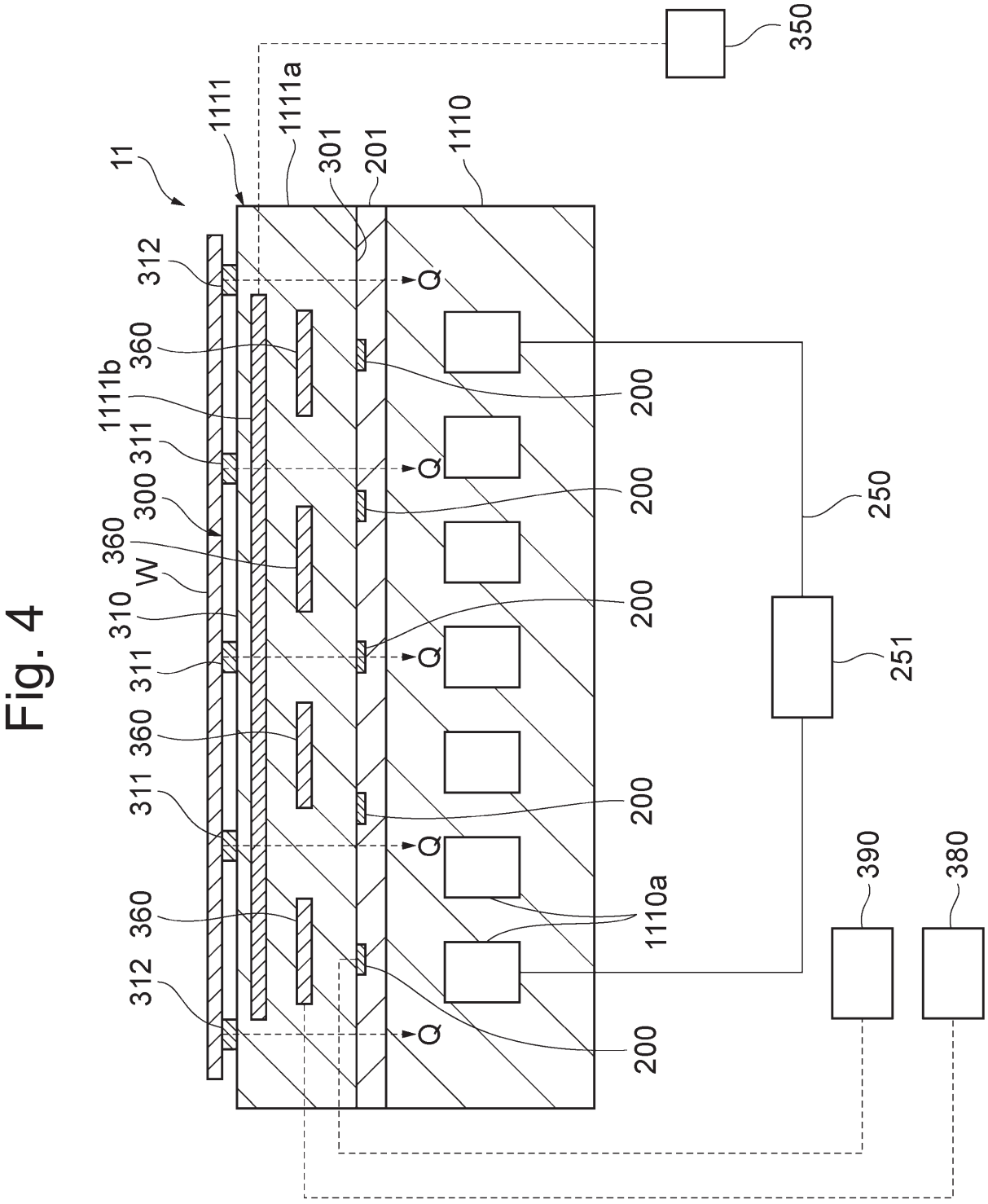
11
1111
1111a
301
201
1110
350
312
360
1111b
311
300
W
310
Q
200
250
251
390
380
1110a

Fig. 5

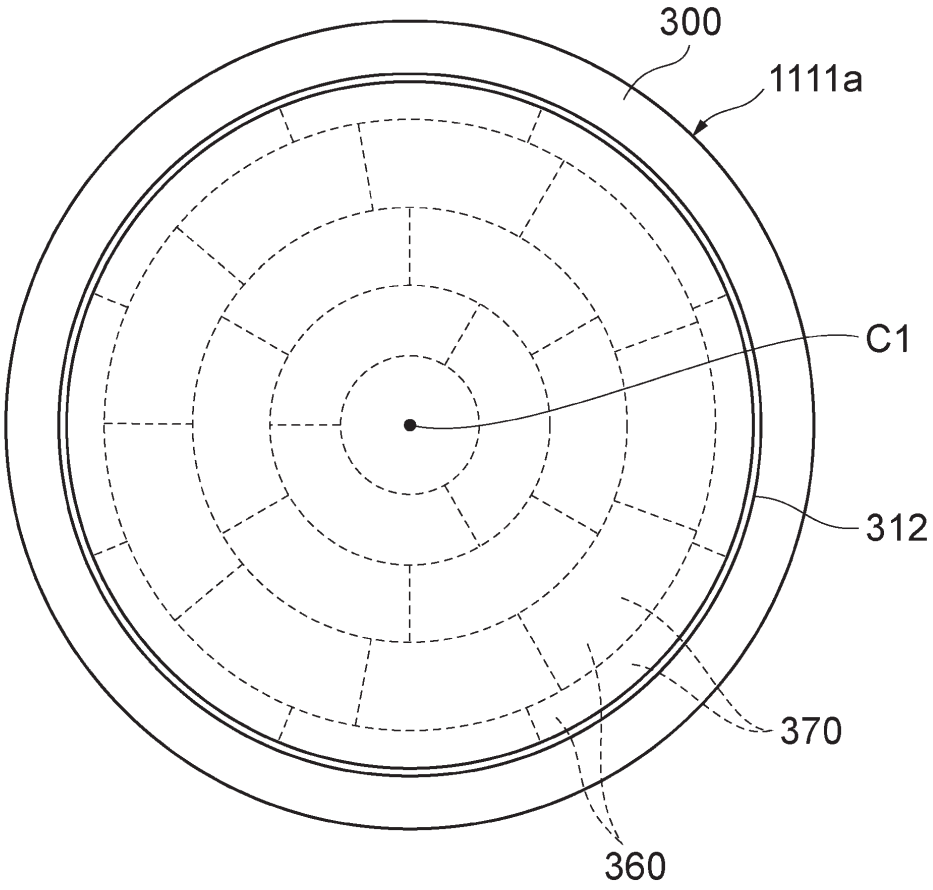

Fig. 6

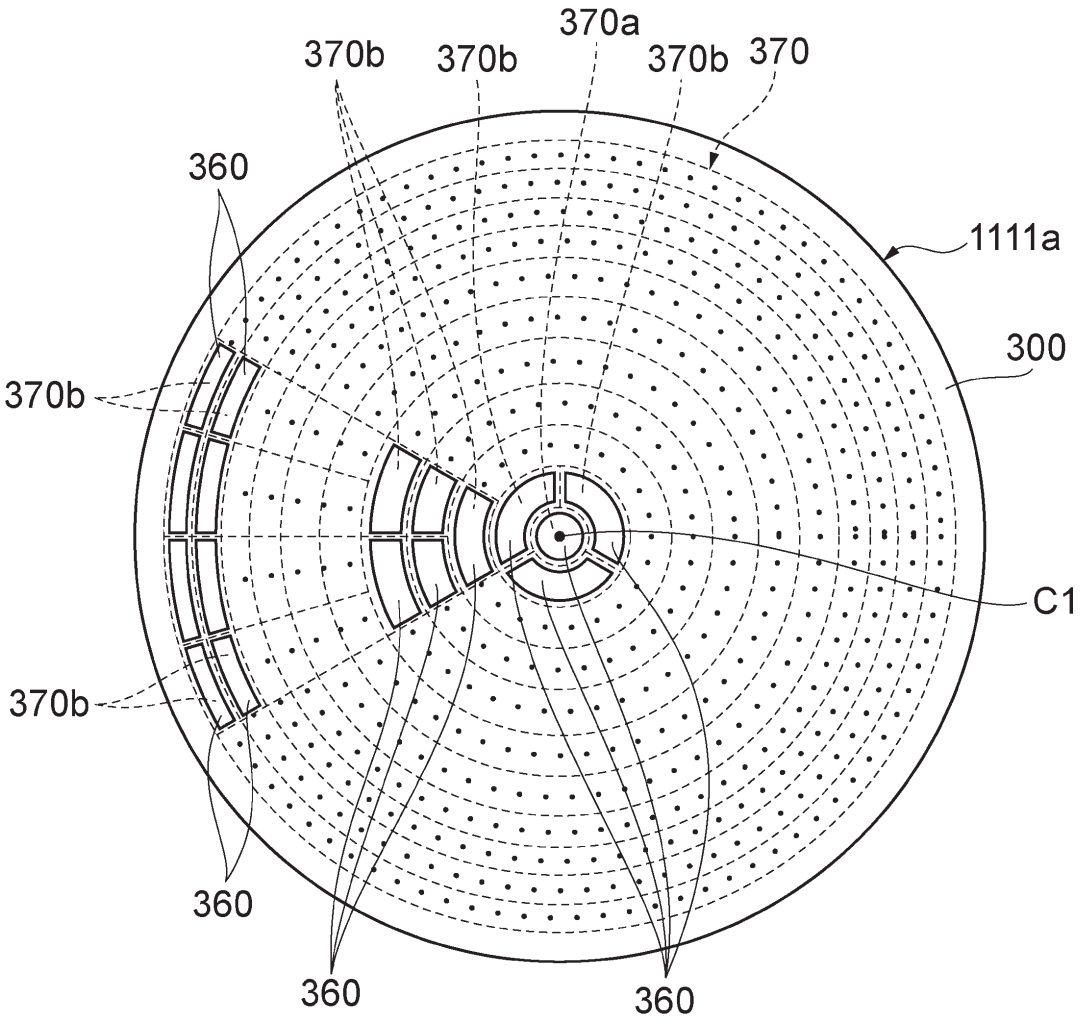

Fig. 7

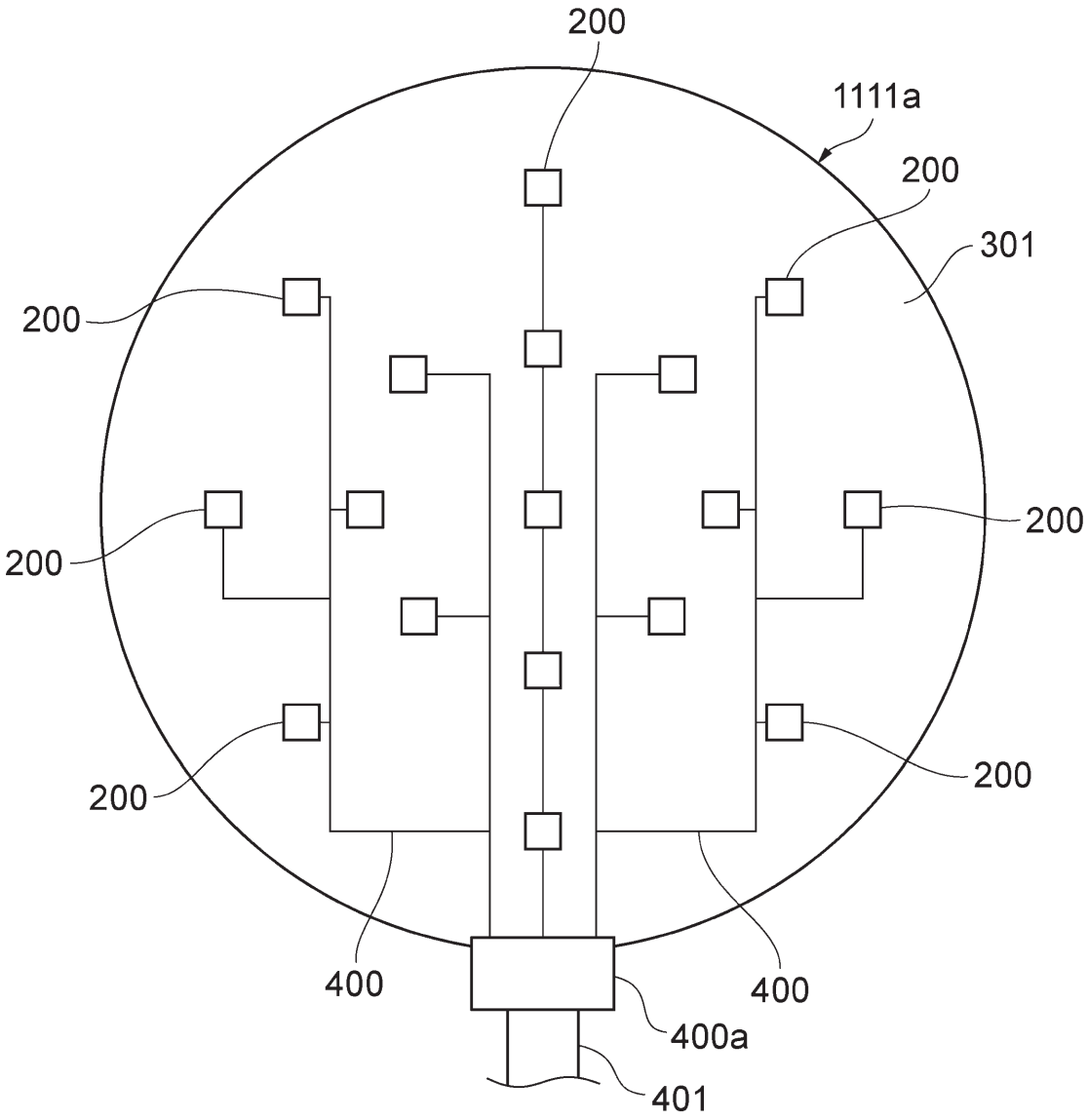

Fig. 8

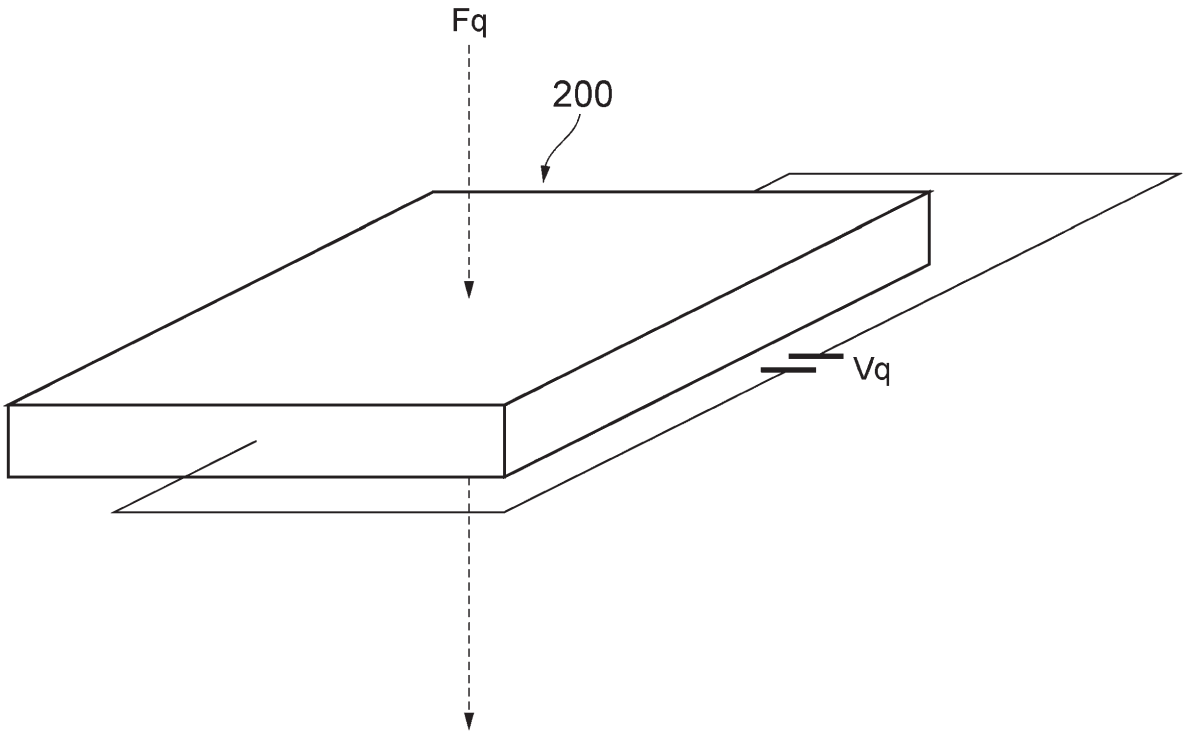
Fq
200
Vq

Fig. 9

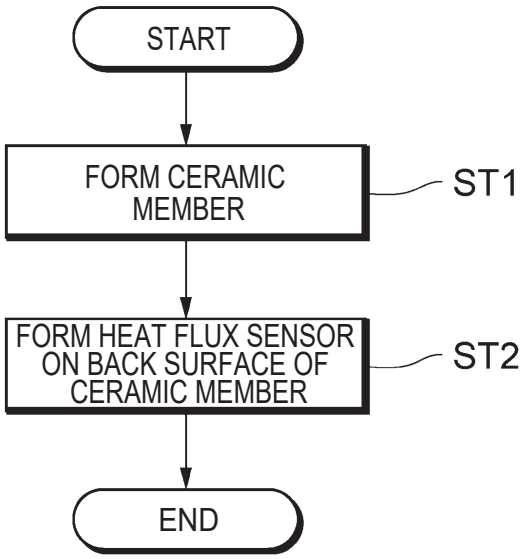
START
FORM CERAMIC MEMBER
ST1
FORM HEAT FLUX SENSOR ON BACK SURFACE OF CERAMIC MEMBER
ST2
END