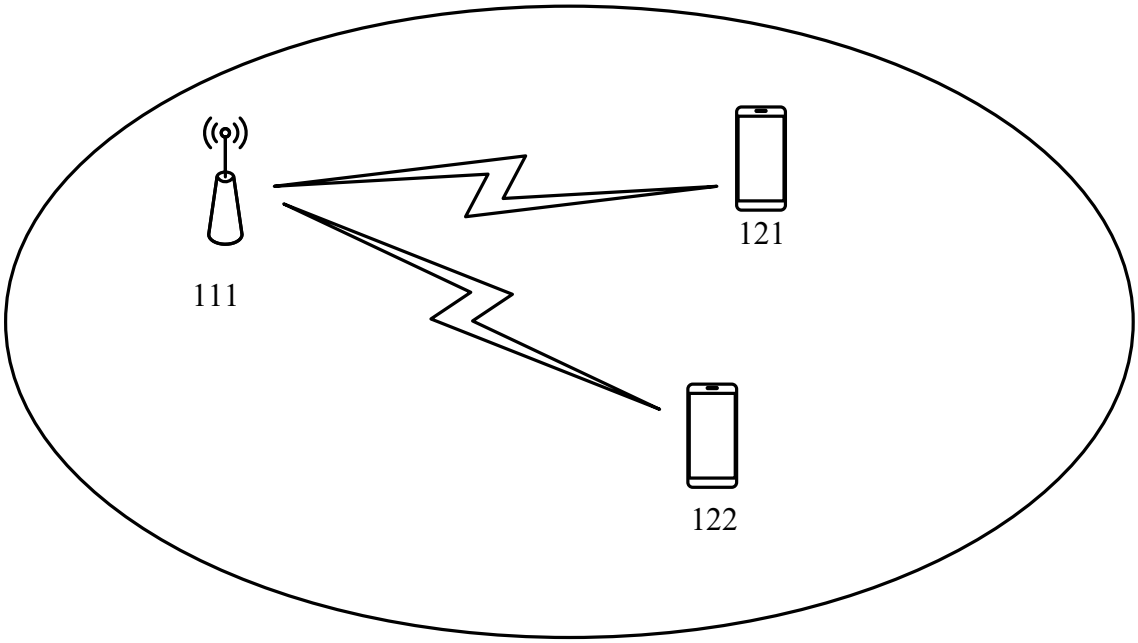


FIG. 1

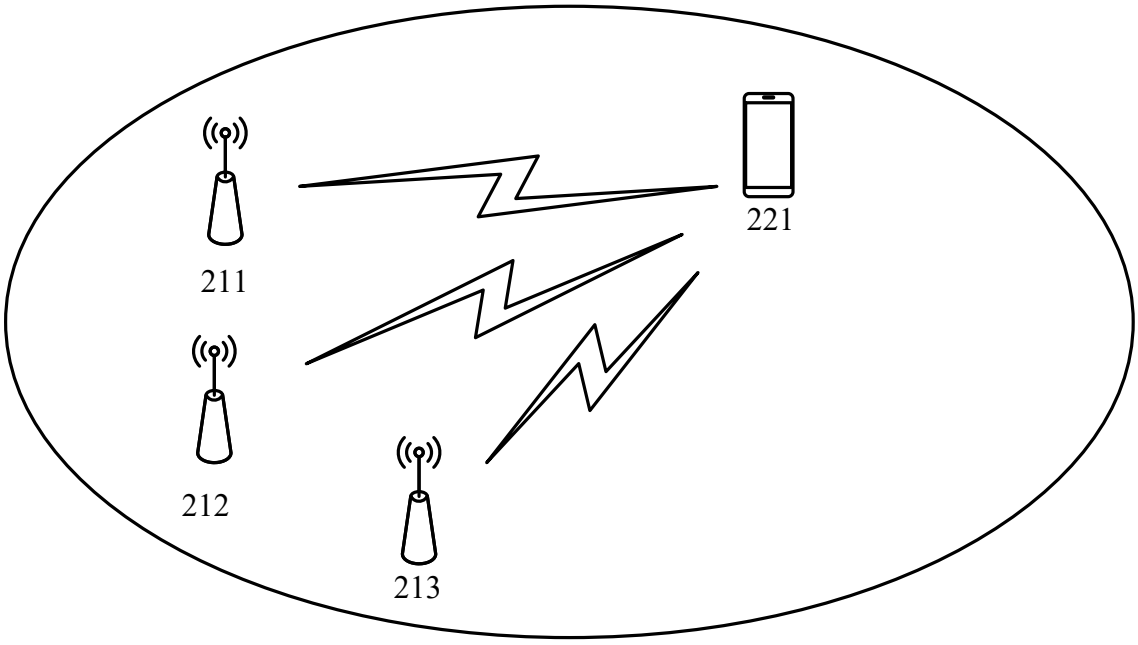


FIG. 2

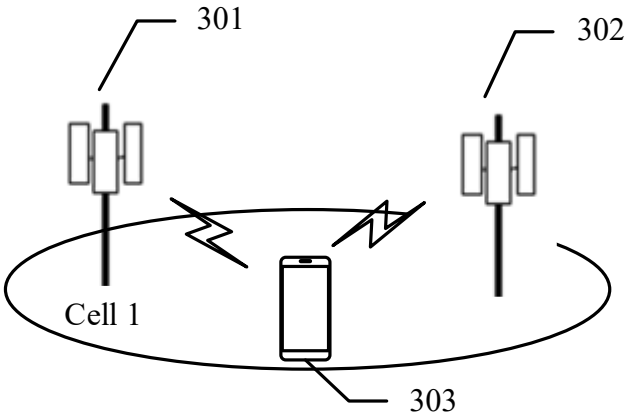


FIG. 3

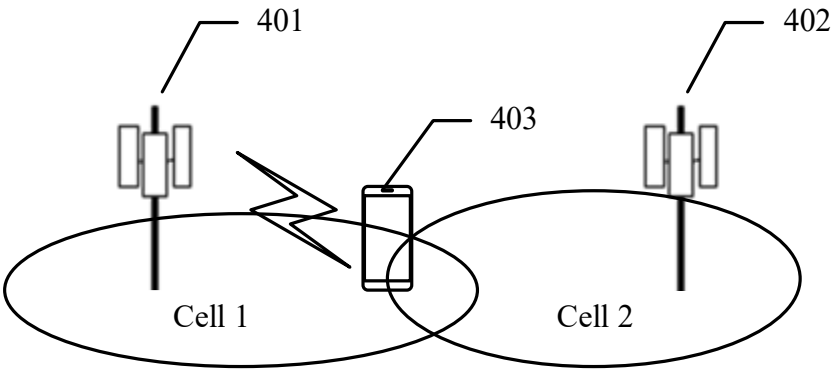


FIG. 4

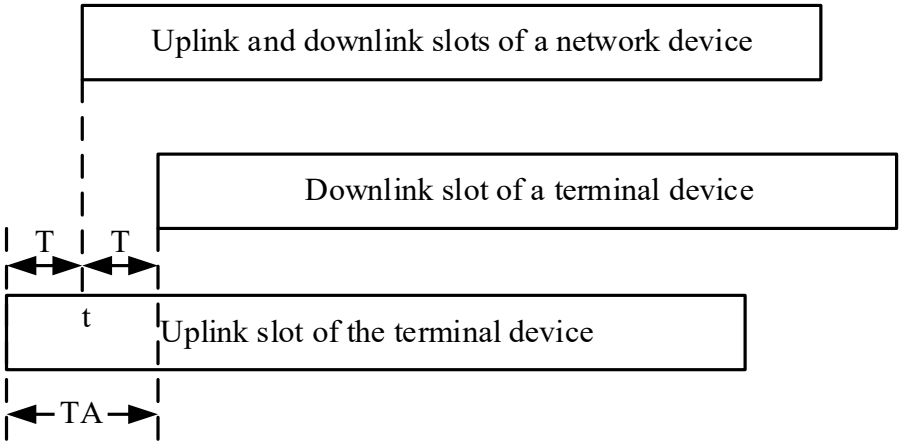


FIG. 5

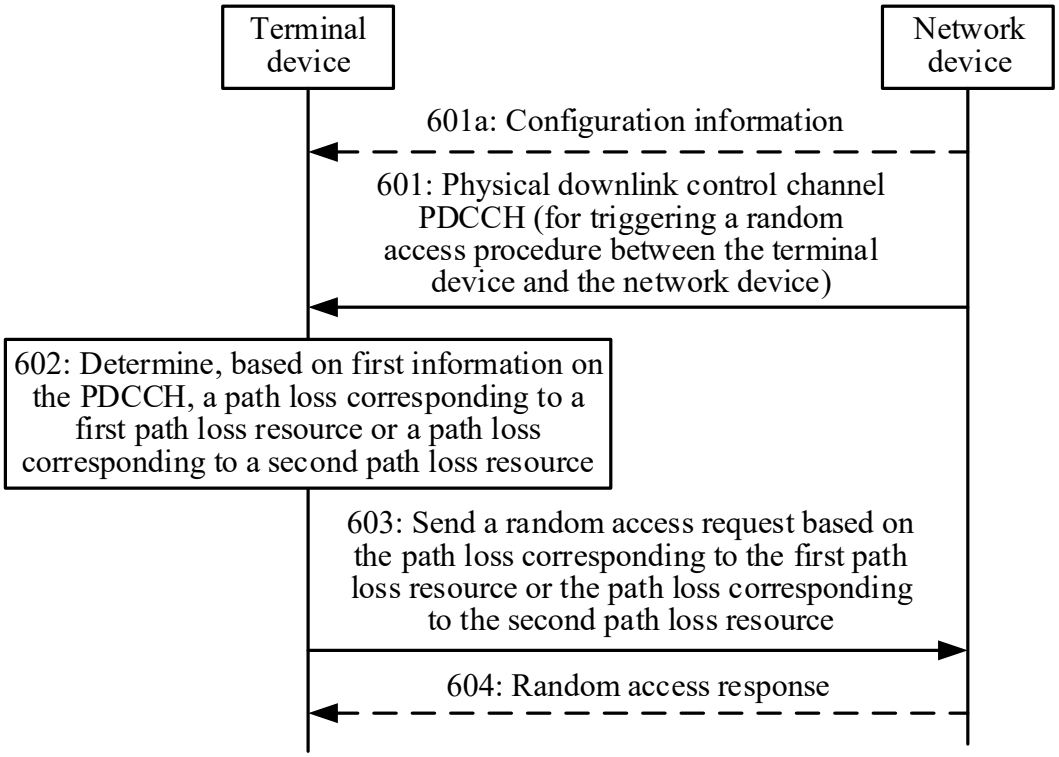


FIG. 6

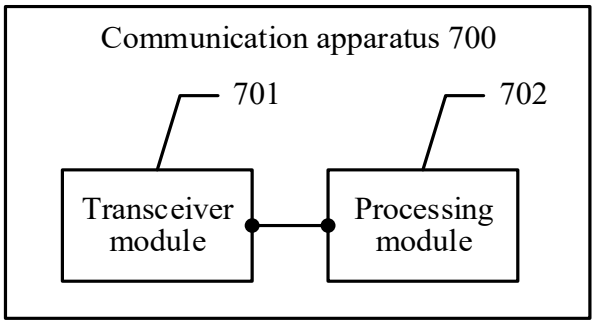


FIG. 7

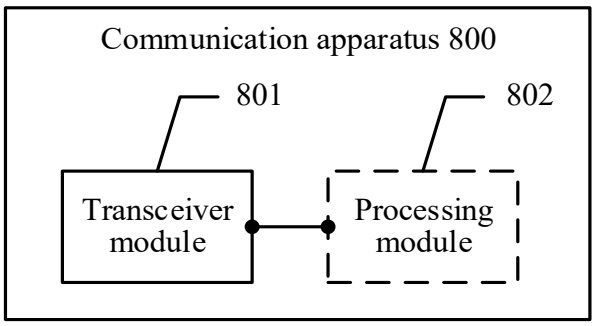


FIG. 8

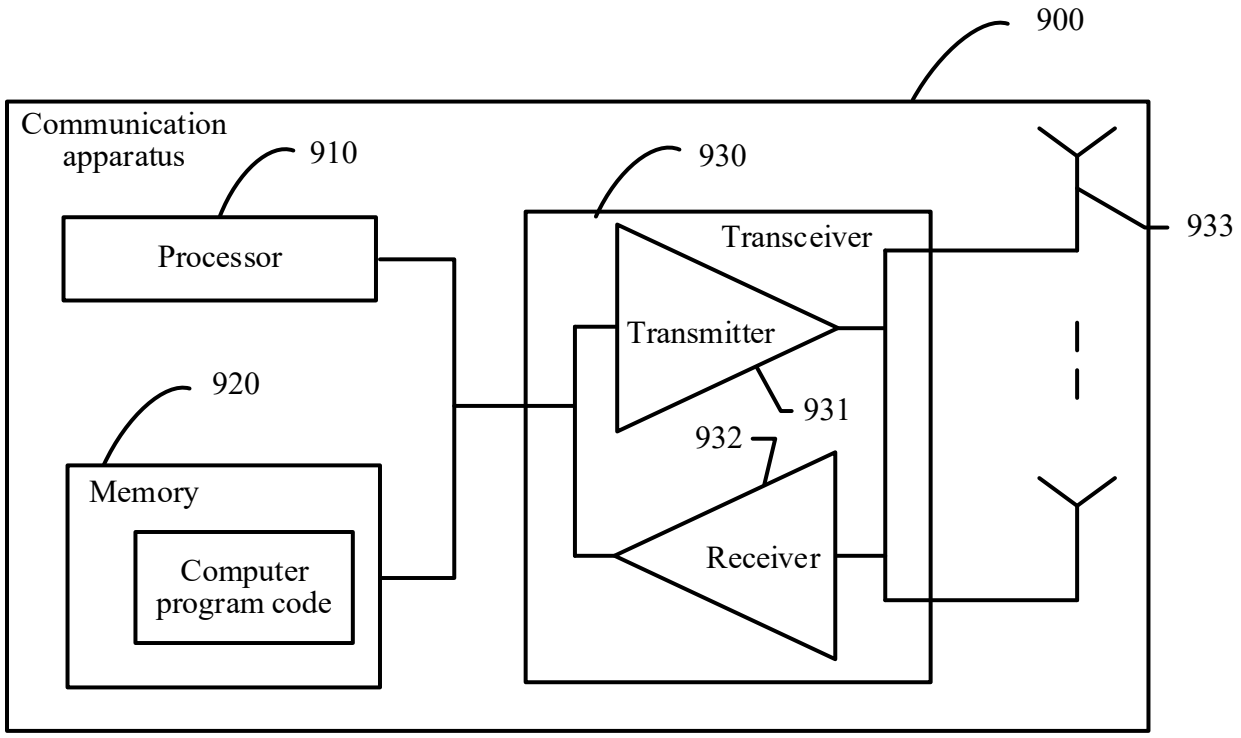
900
Communication apparatus
910
Processor
930
Transceiver
933
Transmitter
931
920
932
Memory
Receiver
Computer program code

FIG. 9

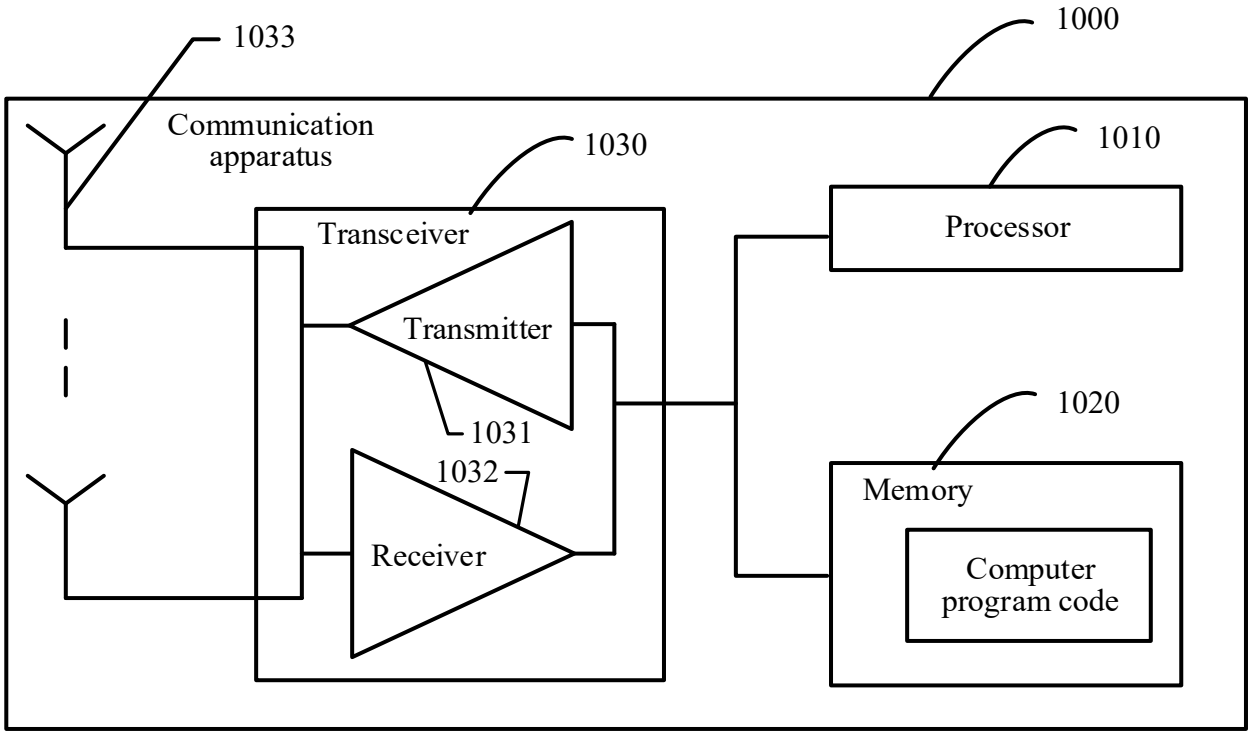
1033
1000
Communication apparatus
1030
1010
Transceiver
Processor
Transmitter
1031
1020
1032
Memory
Receiver
Computer program code

FIG. 10