(12) INTERNATIONAL APPLICATION PUBLISHED UNDER THE PATENT COOPERATION TREATY (PCT)

(19) World Intellectual Property Organization
International Bureau

(43) International Publication Date
4 February 2010 (04.02.2010)

PCT

(10) International Publication Number
WO 2010/014266 A3

(51) International Patent Classification:
B01J 8/00 (2006.01)

(21) International Application Number:
PCT/US2009/035575

(22) International Filing Date:
27 February 2009 (27.02.2009)

(25) Filing Language: English

(26) Publication Language: English

(30) Priority Data:
12/038,163 27 February 2008 (27.02.2008) US

(71) Applicant *(for all designated States except US)*: **UNION CARBIDE CHEMICALS & PLASTICS TECHNOLOGY CORPORATION** [US/US]; 2020 Dow Center, Midland, MI 48674 (US).

(72) Inventors; and

(75) Inventors/Applicants *(for US only)*: **PARRISH, John, Roberts** [US/US]; 5002 Dempsey Drive, Charleston, WV 25313 (US). **DRABISH, Jeffrey, Brian** [US/US]; 120 Canterbury Circle, Elkview, WV 25071 (US). **LONGORIA, Oscar, M.** [US/US]; 510 St. Francis Circle, Rockport, TX 78382 (US). **SWECKER, James, Leland** [US/US]; 165 Elk River Road, S., Clendenin, WV 25045 (US).

(74) Agents: **HANSBRO, Kevin, R.** et al.; The Dow Chemical Company, 2040 Dow Center, Midland, MI 48674 (US).

(81) Designated States *(unless otherwise indicated, for every kind of national protection available)*: AE, AG, AL, AM, AO, AT, AU, AZ, BA, BB, BG, BH, BR, BW, BY, BZ, CA, CH, CN, CO, CR, CU, CZ, DE, DK, DM, DO, DZ, EC, EE, EG, ES, FI, GB, GD, GE, GH, GM, GT, HN, HR, HU, ID, IL, IN, IS, JP, KE, KG, KM, KN, KP, KR, KZ, LA, LC, LK, LR, LS, LT, LU, LY, MA, MD, ME, MG, MK, MN, MW, MX, MY, MZ, NA, NG, NI, NO, NZ, OM, PG, PH, PL, PT, RO, RS, RU, SC, SD, SE, SG, SK, SL, SM, ST, SV, SY, TJ, TM, TN, TR, TT, TZ, UA, UG, US, UZ, VC, VN, ZA, ZM, ZW.

[Continued on next page]

(54) Title: IMPROVED RAW MATERIAL EFFICIENCY METHOD AND PROCESS

FIG. 1

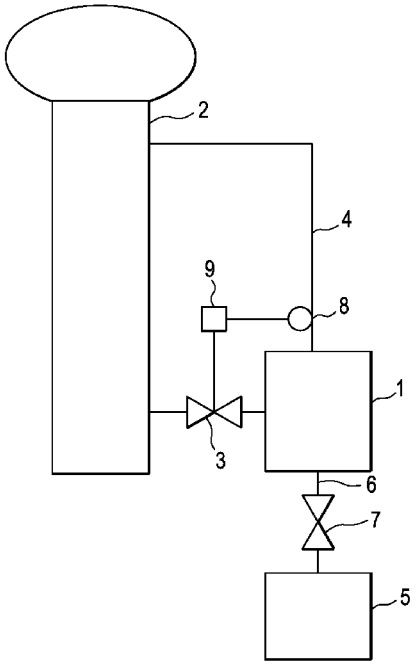

(57) Abstract: A method and apparatus are disclosed for controlling product discharge from a fluidized bed reactor and for minimizing the loss of the unreacted monomer in the fiuidizing gas upon removing the solid polymer product from the reactor. The method and apparatus utilize at least one detector in the product tank or its vent line and a control system in communication with the detector and the product tank fill valve, along with certain algorithms, to adjust by an iterative process, the product discharge time, thereby maximizing resin fill in the product tank and minimizing the lost reactor gas volume.

WO 2010/014266 A3

(84) **Designated States** *(unless otherwise indicated, for every kind of regional protection available)*: ARIPO (BW, GH, GM, KE, LS, MW, MZ, NA, SD, SL, SZ, TZ, UG, ZM, ZW), Eurasian (AM, AZ, BY, KG, KZ, MD, RU, TJ, TM), European (AT, BE, BG, CH, CY, CZ, DE, DK, EE, ES, FI, FR, GB, GR, HR, HU, IE, IS, IT, LT, LU, LV, MC, MK, MT, NL, NO, PL, PT, RO, SE, SI, SK, TR), OAPI (BF, BJ, CF, CG, CI, CM, GA, GN, GQ, GW, ML, MR, NE, SN, TD, TG).

Published:

— *with international search report (Art. 21(3))*

— *before the expiration of the time limit for amending the claims and to be republished in the event of receipt of amendments (Rule 48.2(h))*

(88) **Date of publication of the international search report**:
25 March 2010