[Fig. 1]

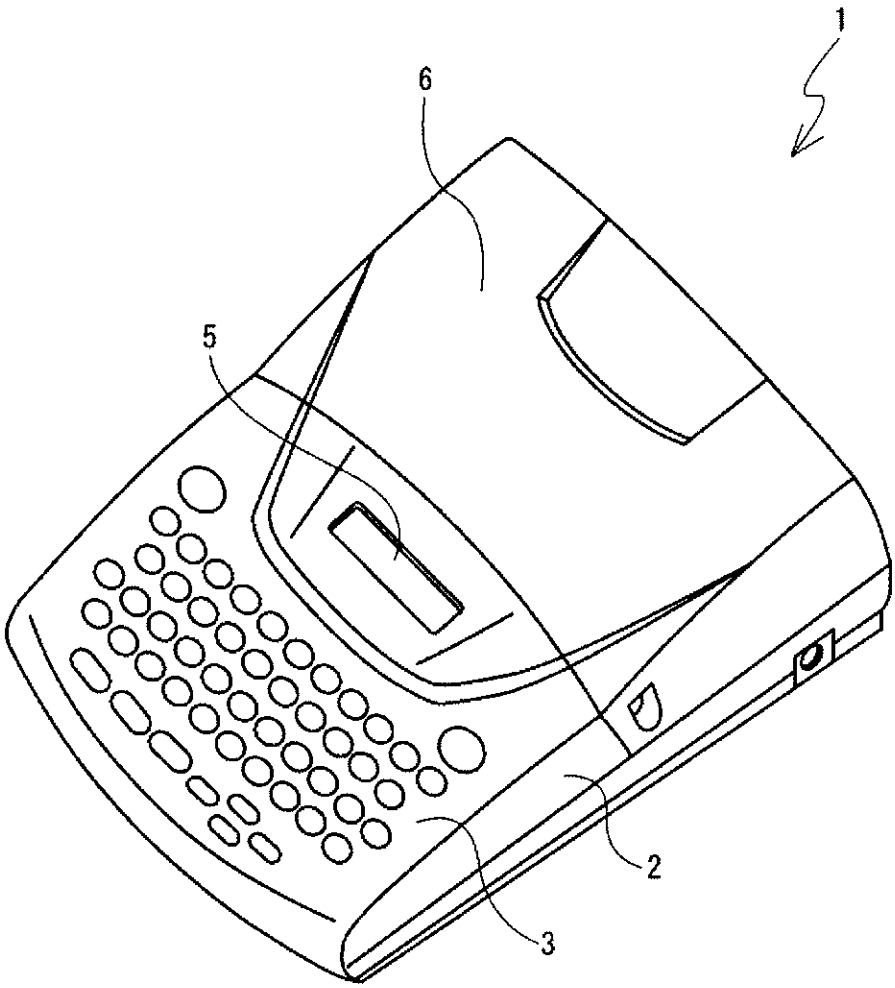

[Fig. 2]

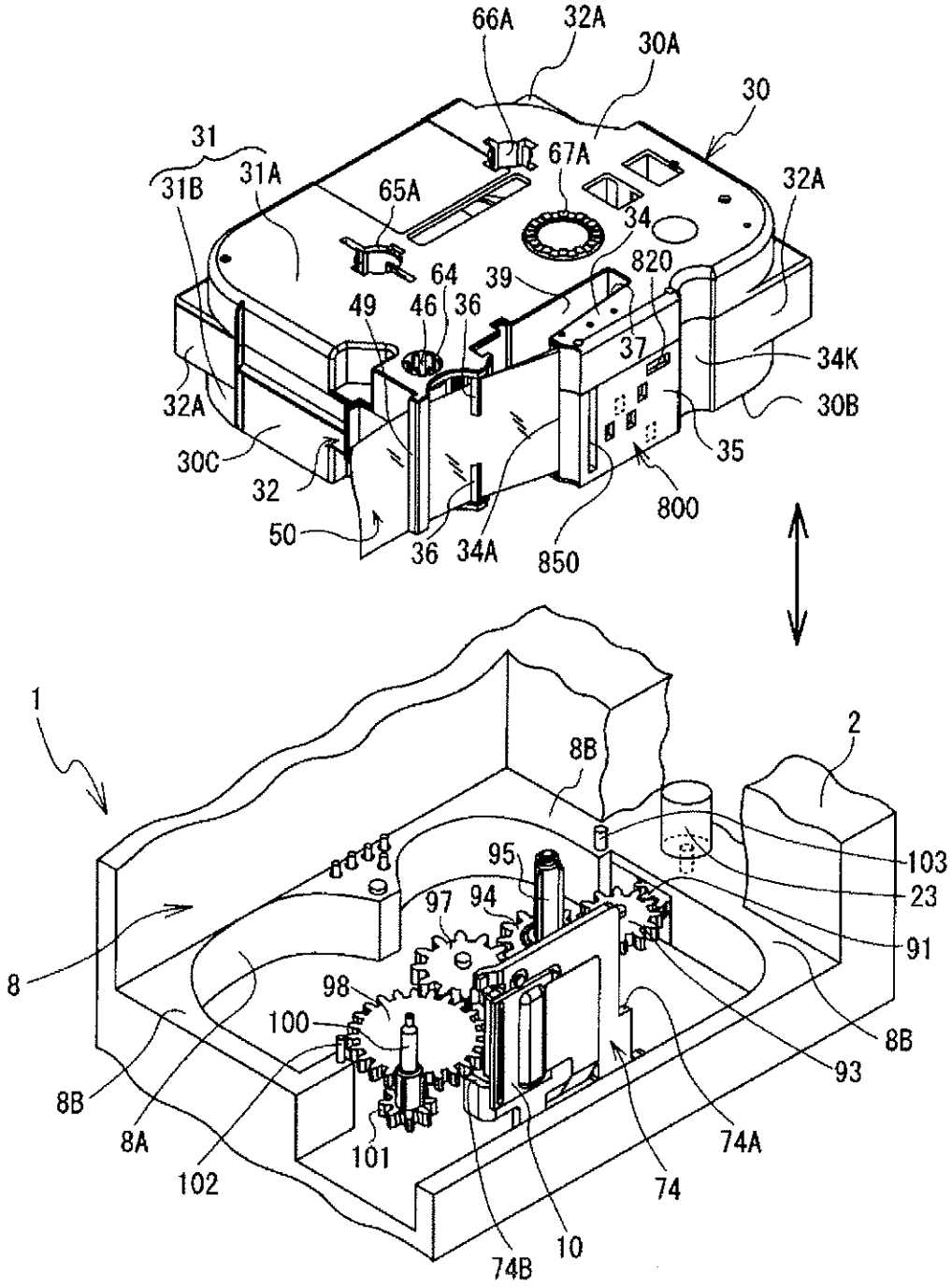
66A
32A
30A
30
31
31B
31A
67A
65A
34
32A
820
64
39
49
46
36
37
34K
30B
32A
30C
32
35
50
36
34A
850
800
1
2
8B
103
95
23
97
94
91
8
98
100
8B
93
8B
8A
74A
102
101
74
74B
10

[Fig. 3]

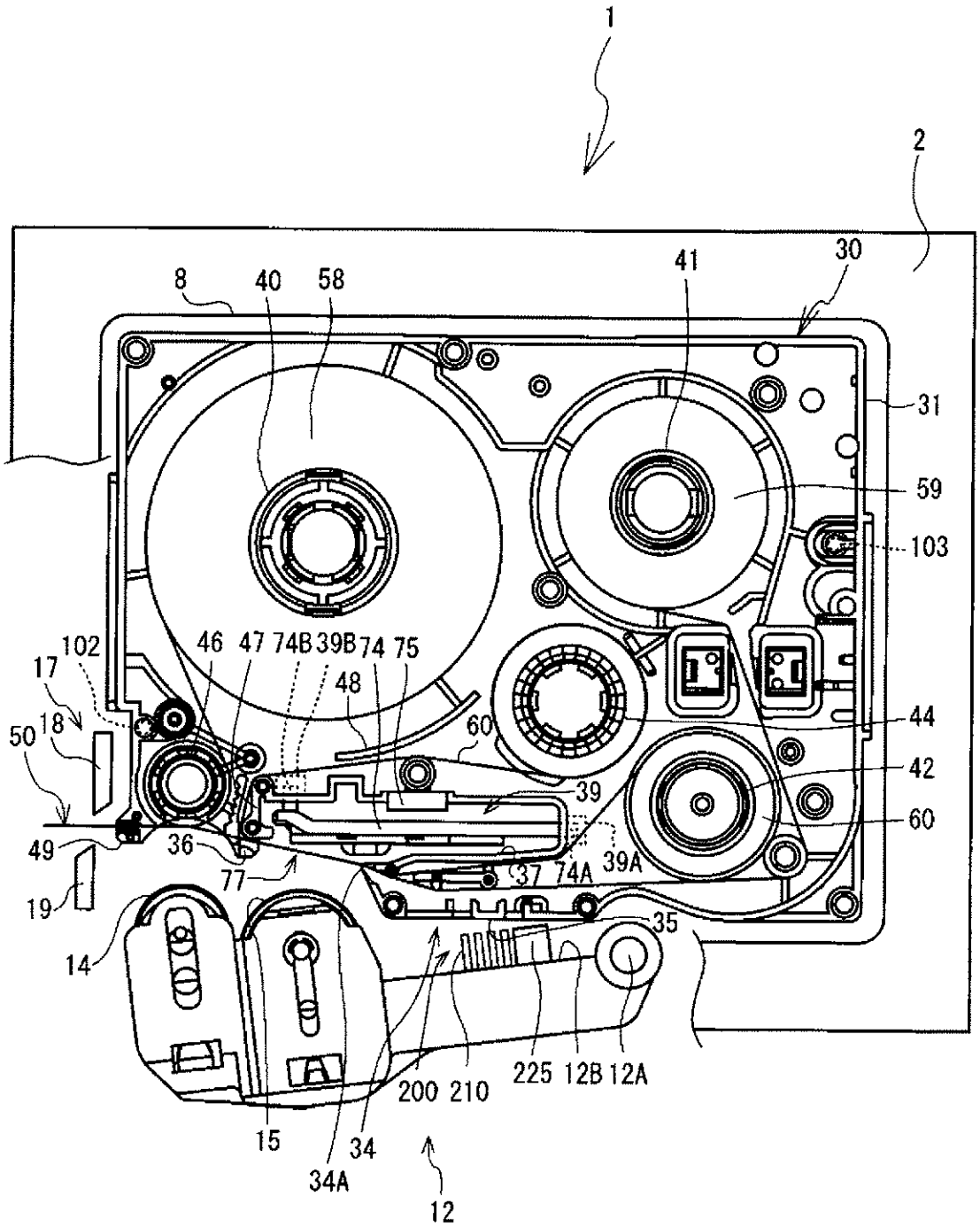
1
2
8
40
58
41
30
31
59
103
44
42
60
39
39A
37
74A
35
102
17
18
50
49
19
14
46
47
74B
39B
74
75
48
60
36
77
225
12B
12A
200
210
15
34
34A
12

[Fig. 4]

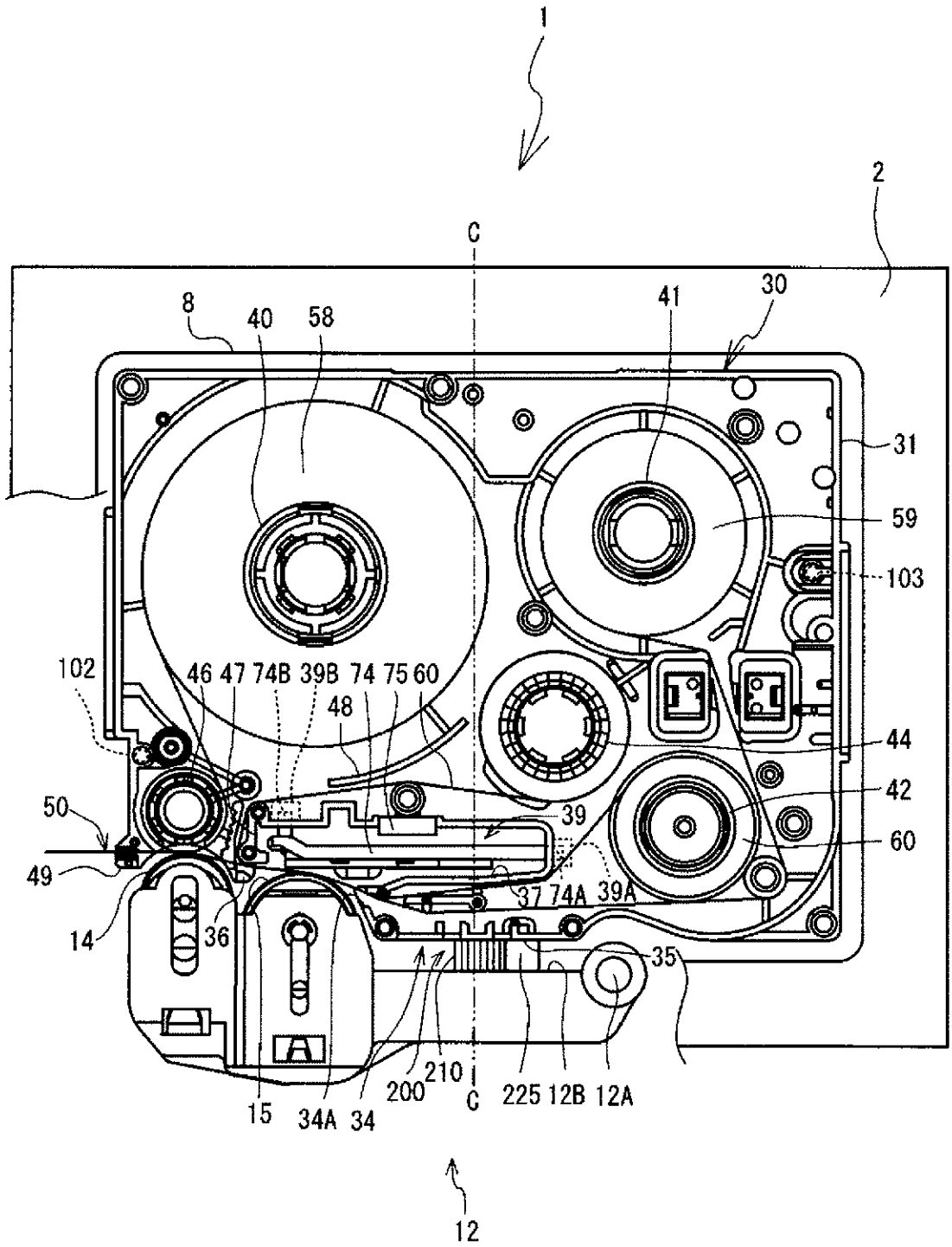
1
2
C
8
40
58
41
30
31
59
103
102
46 47 74B 39B 74 75 60
48
44
42
50
39
60
49
37 74A 39A
14
36
35
A
15
34A
34
200
210
C
225 12B 12A
12

[Fig. 5]

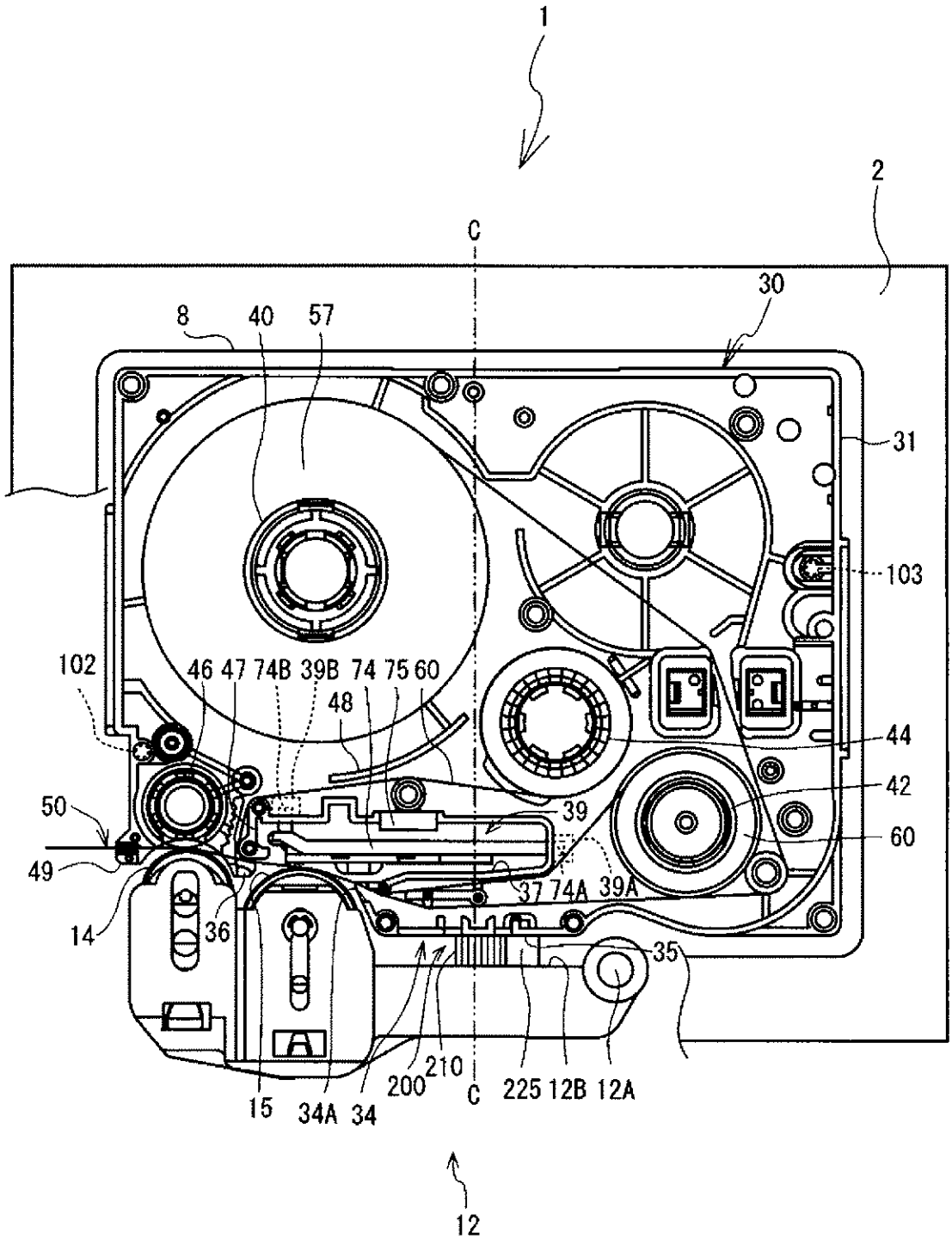
1
2
C
30
8
40
57
31
103
102
46 47 74B 39B 74 75 60
48
44
42
50
39
60
49
37 74A 39A
14
36
35
15
34A 34
200
210
C
225 12B 12A
12

[Fig. 6]

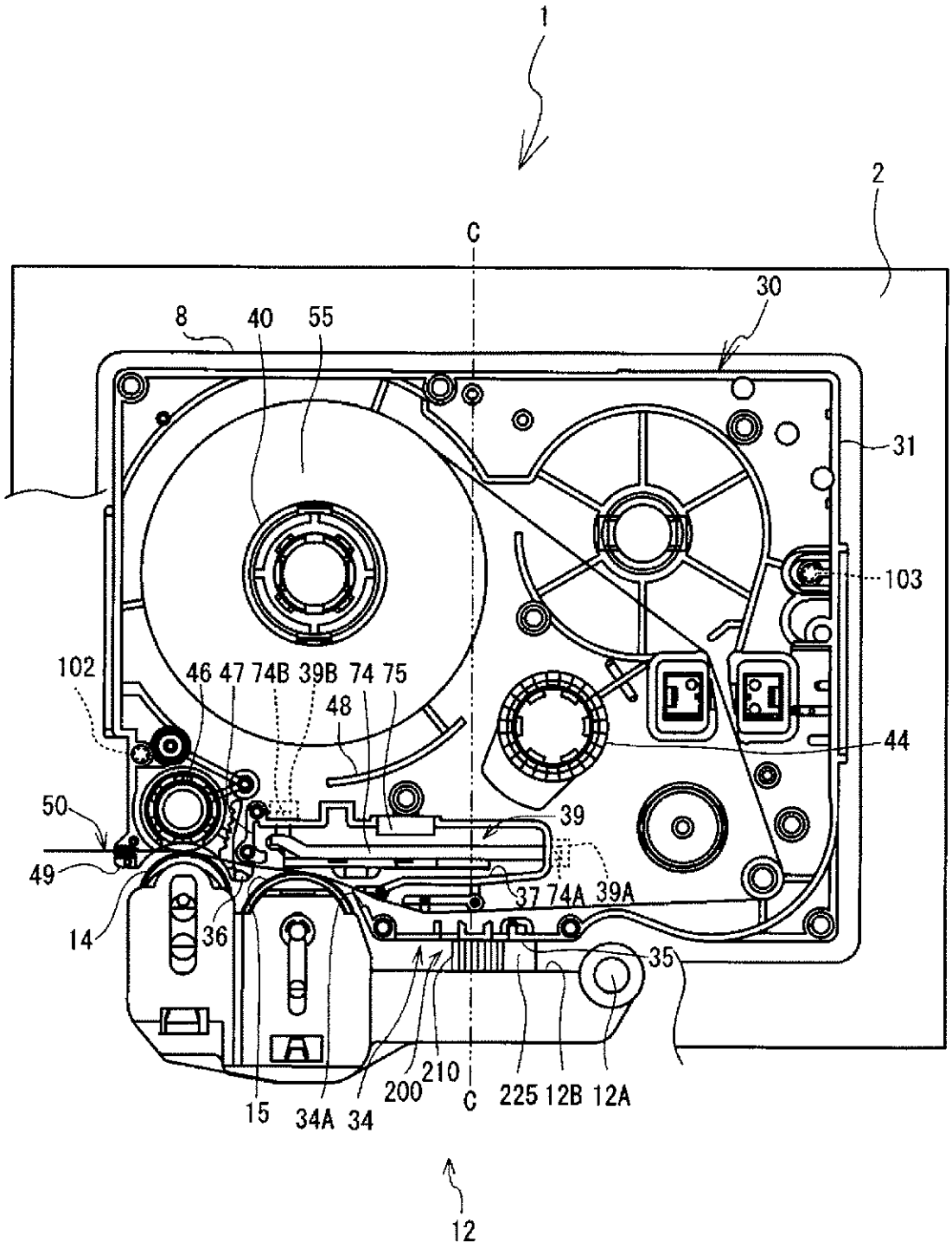
1
2
C
30
8
40
55
31
103
102
46 47 74B 39B 74 75
48
44
50
39
49
37 74A 39A
14
36
35
15
34A 34
200
210
C
225 12B 12A
12

[Fig. 7]

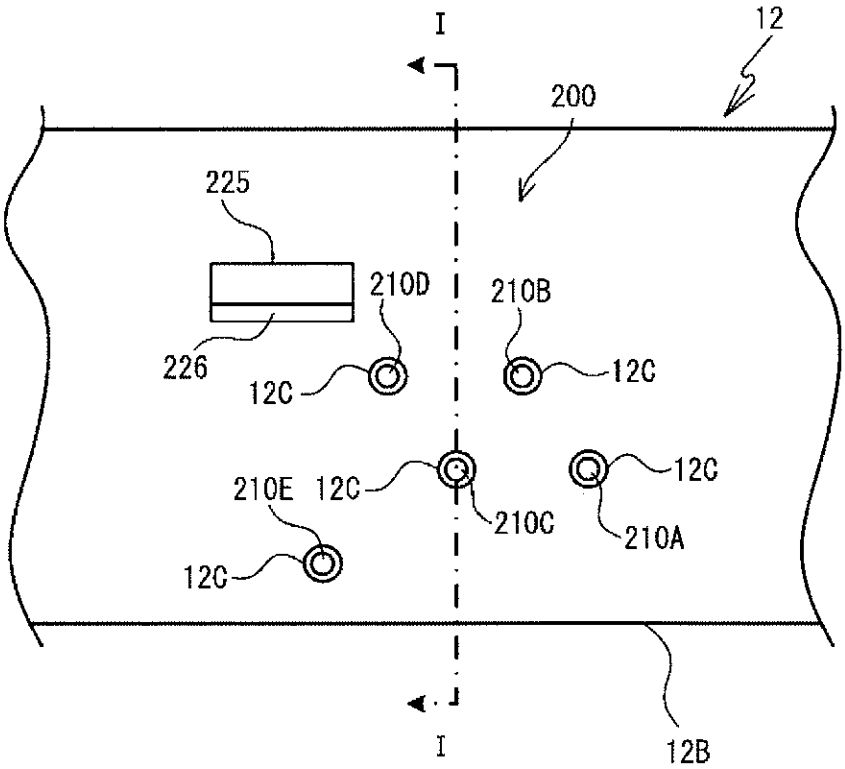
I
12
200
225
210D
210B
226
12C
12C
210E
12C
12C
210C
12C
210A
12C
I
12B

[Fig. 8]

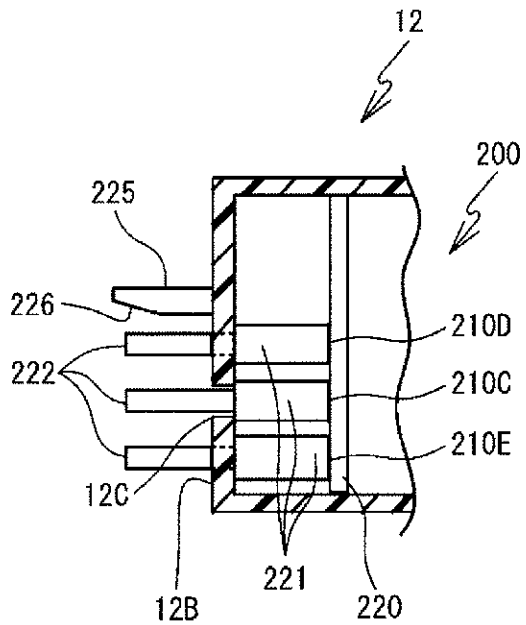
12
200
225
226
222
210D
210C
210E
12C
12B
221
220

[Fig. 9]

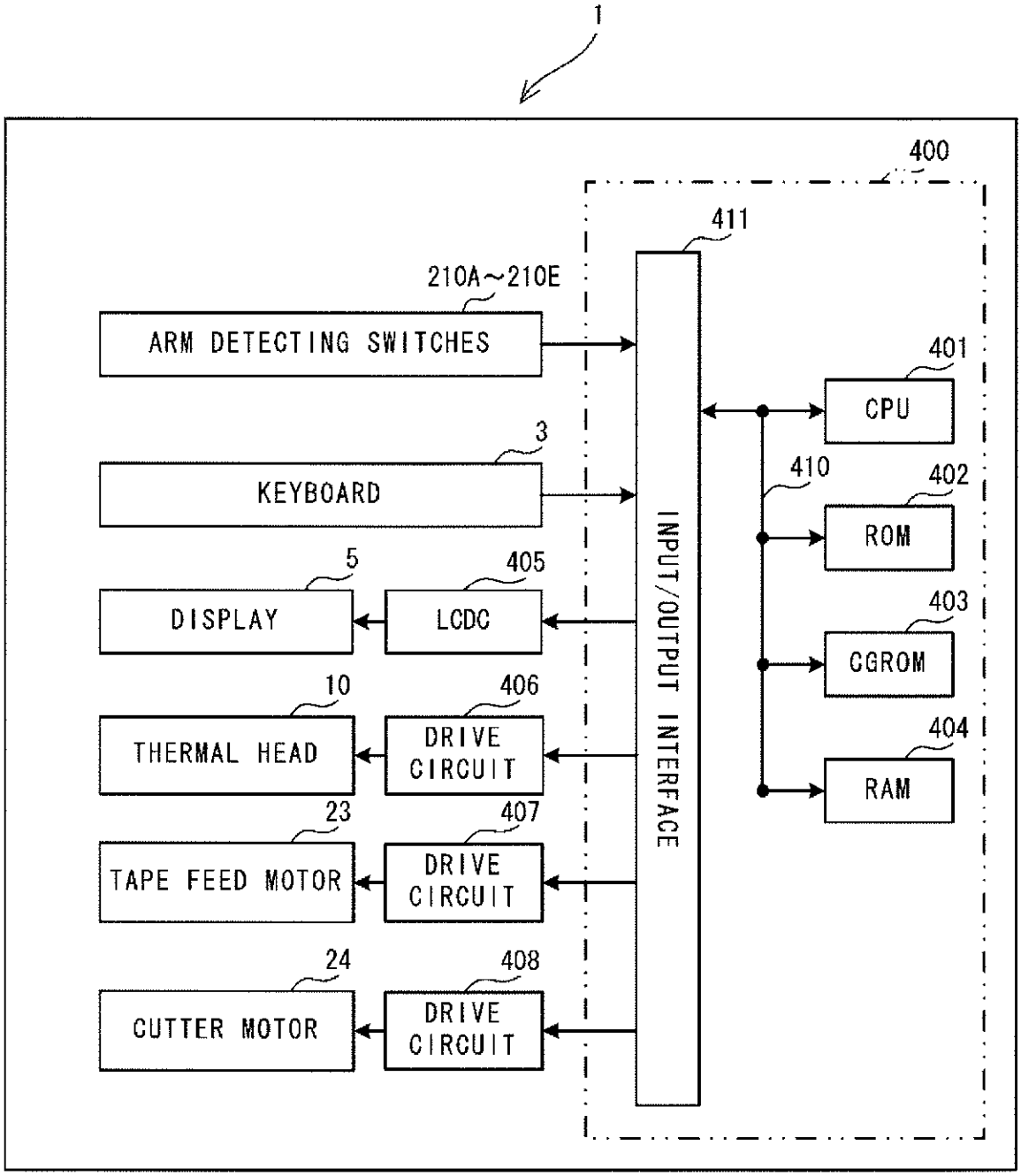
1
400
411
210A~210E
ARM DETECTING SWITCHES
3
KEYBOARD
5
DISPLAY
405
LCDC
10
THERMAL HEAD
406
DRIVE CIRCUIT
23
TAPE FEED MOTOR
407
DRIVE CIRCUIT
24
CUTTER MOTOR
408
DRIVE CIRCUIT
INPUT/OUTPUT INTERFACE
401
CPU
410
402
ROM
403
CGROM
404
RAM

[Fig. 10]

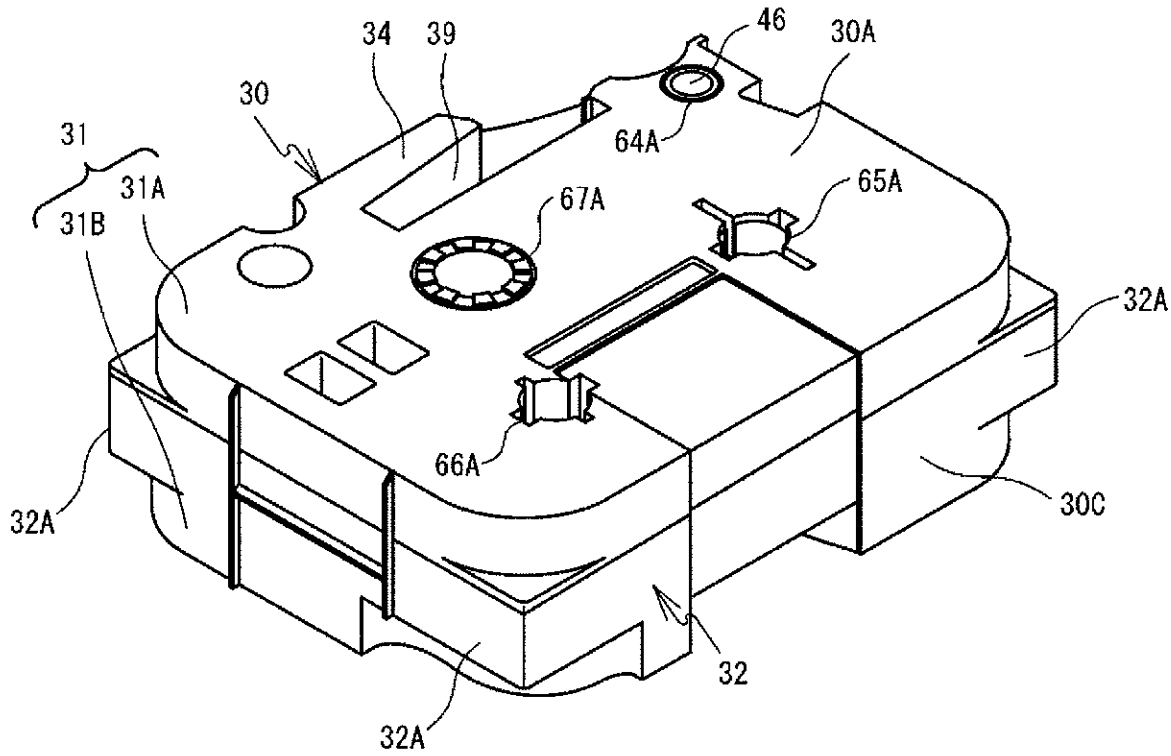
34
39
46
30A
30
64A
31
31A
31B
67A
65A
32A
66A
32A
30C
32
32A

[Fig. 11]

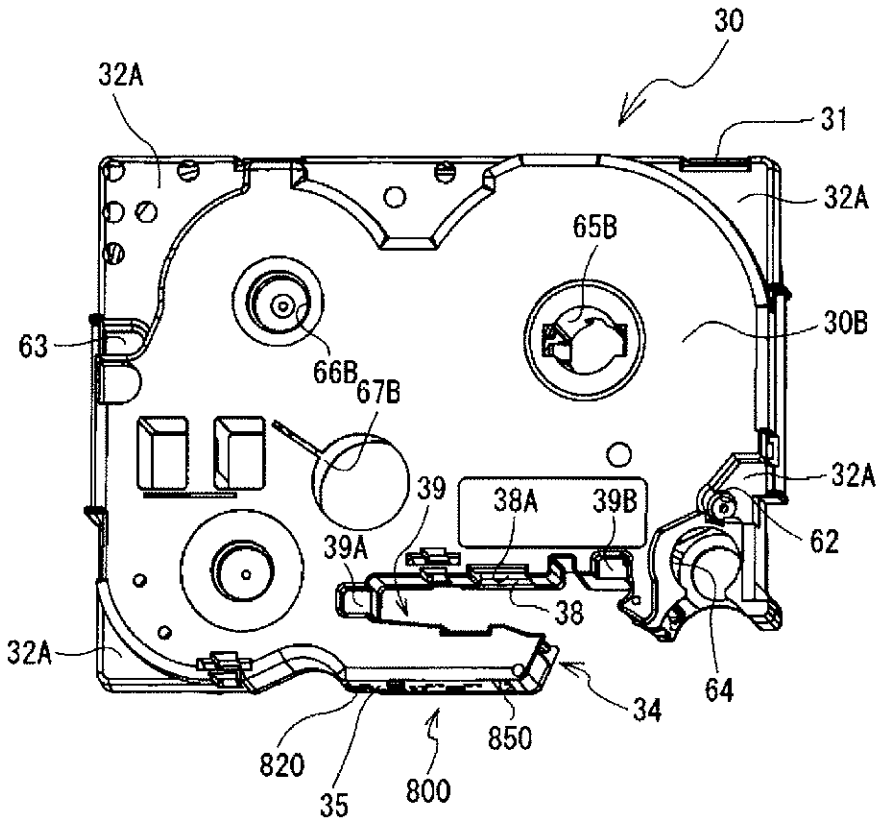
30
32A
31
32A
65B
63
30B
66B
67B
39
38A
39B
32A
62
39A
38
32A
64
34
820
850
35
800

[Fig. 12]

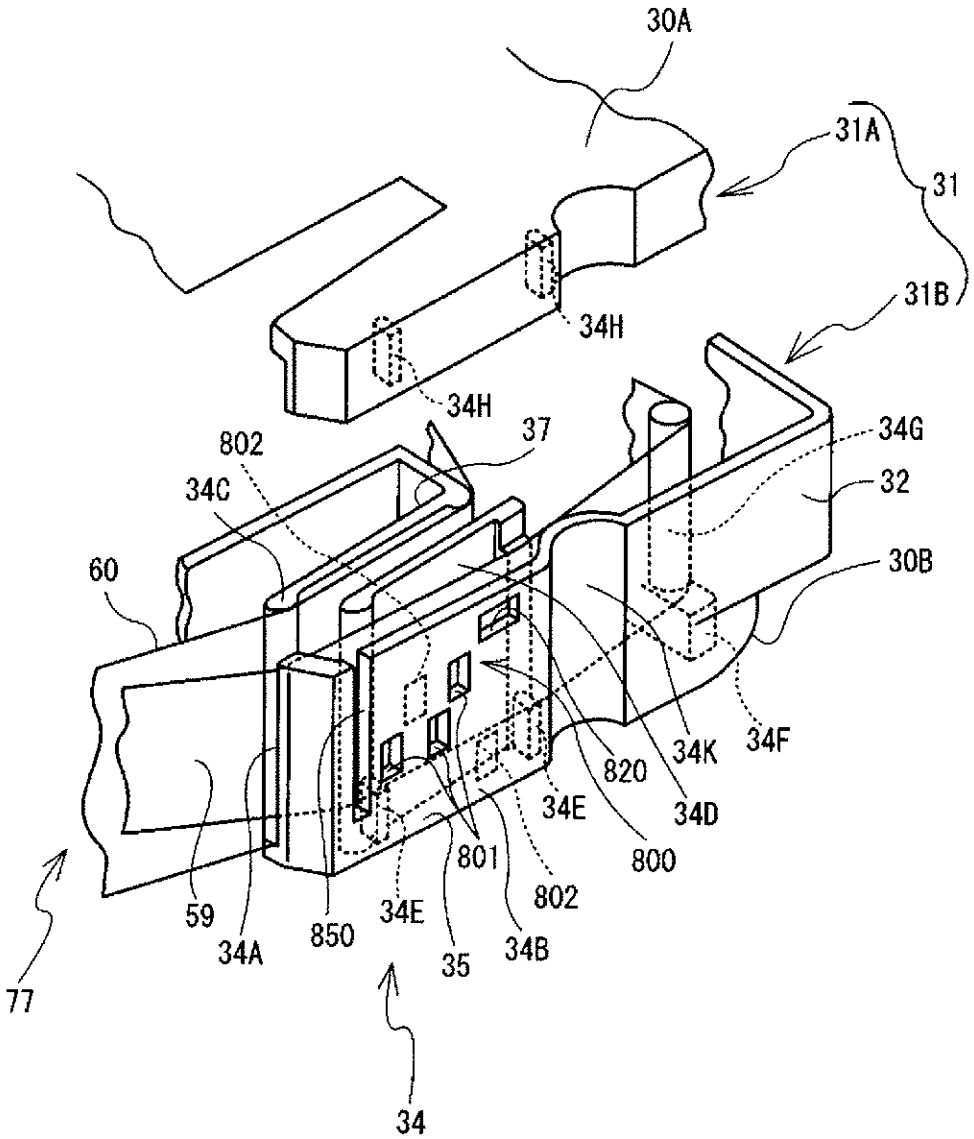
30A
31A
31
31B
34H
34H
802
37
34C
34G
32
60
30B
34K
34F
820
34E
34D
800
801
802
59
34A
850
34E
35
34B
77
34

[Fig. 13]

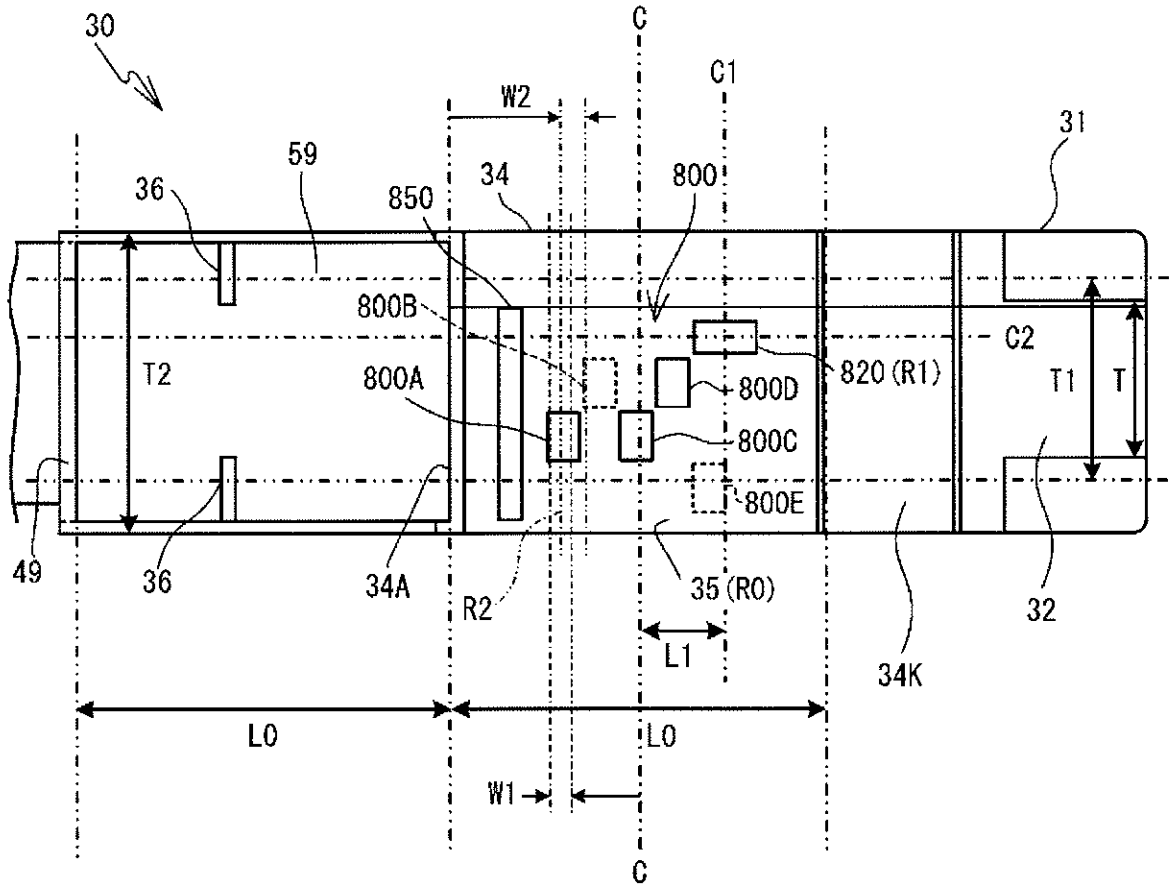
30
C
C1
W2
31
59
36
34
850
800
800B
C2
T2
800A
800D
820 (R1)
T1
T
800C
800E
49
36
34A
R2
35 (R0)
32
L1
34K
L0
L0
W1
C

[Fig. 14]

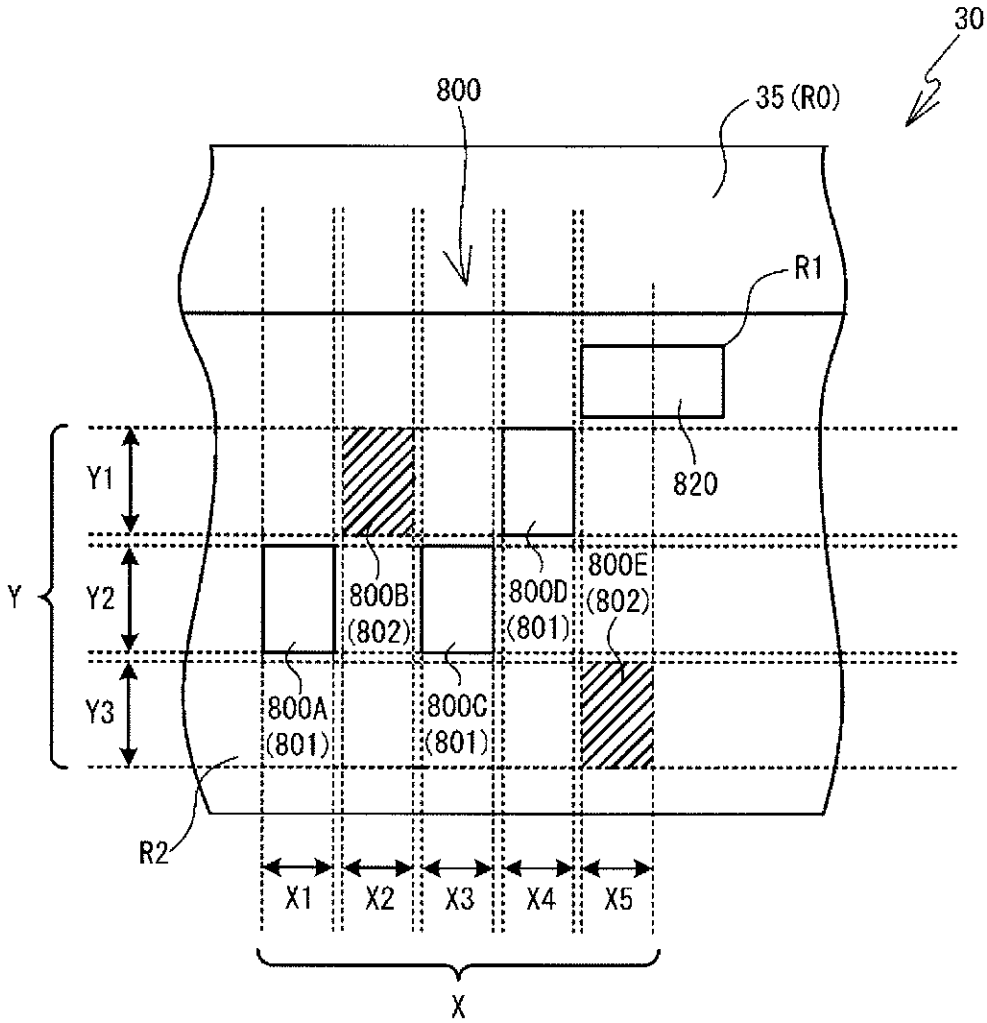
30
800
35 (R0)
R1
820
Y1
Y2
Y3
Y
800B
(802)
800D
(801)
800E
(802)
800A
(801)
800C
(801)
R2
X1
X2
X3
X4
X5
X

[Fig. 15]

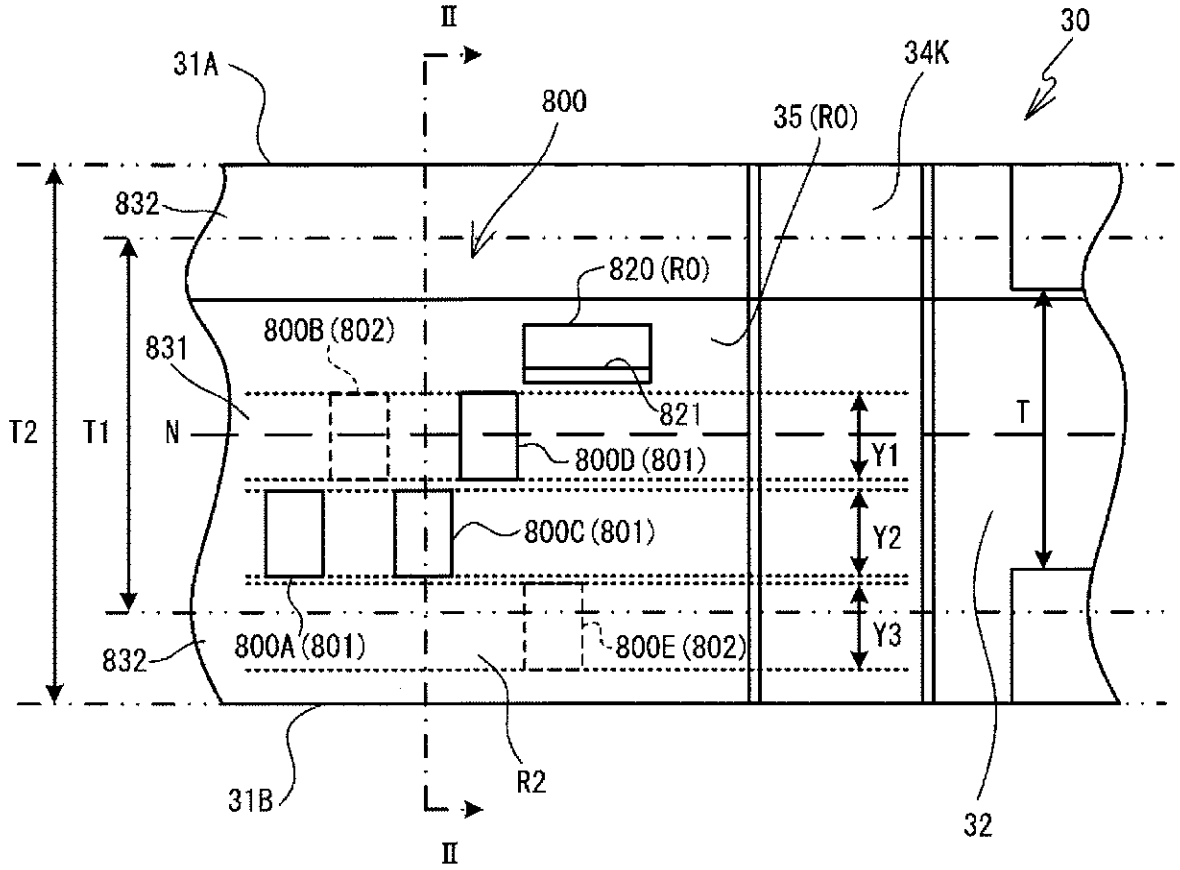
II
31A
800
35 (RO)
34K
30
832
820 (RO)
800B (802)
831
821
T2
T1
N
800D (801)
T
Y1
800C (801)
Y2
Y3
832
800A (801)
800E (802)
31B
R2
32
II

[Fig. 16]

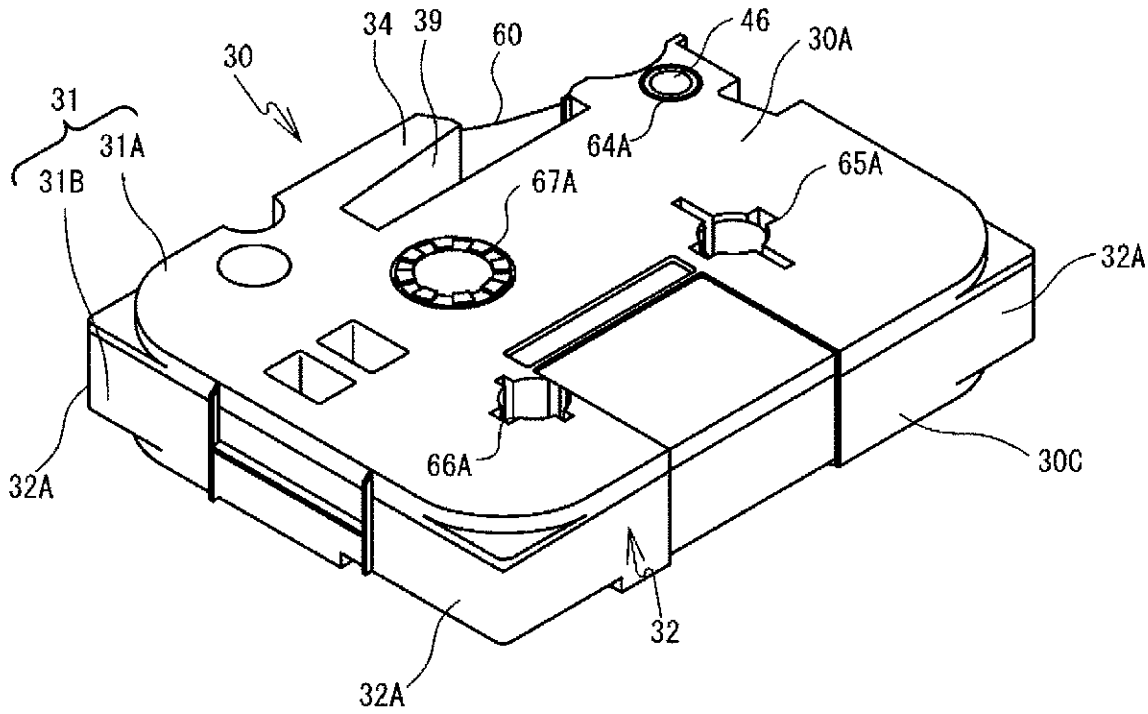
34
39
60
46
30A
30
31
31A
64A
31B
67A
65A
32A
66A
30C
32A
32
32A

[Fig. 17]

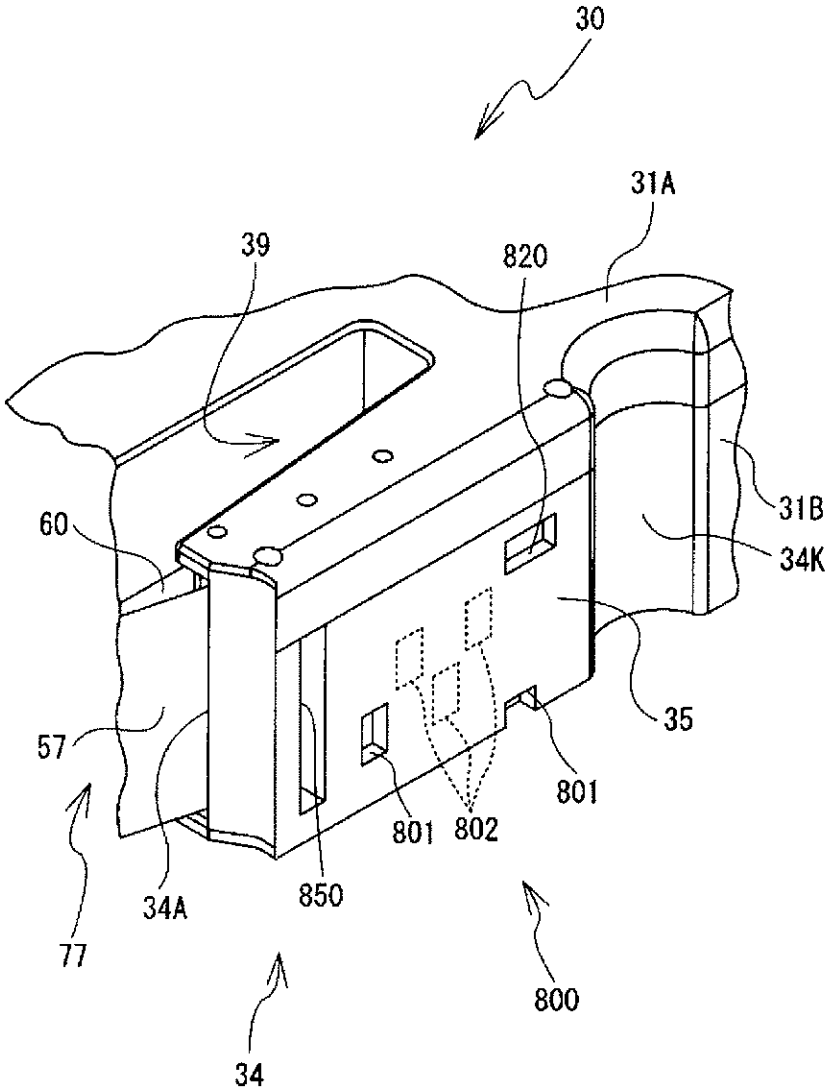

[Fig. 18]

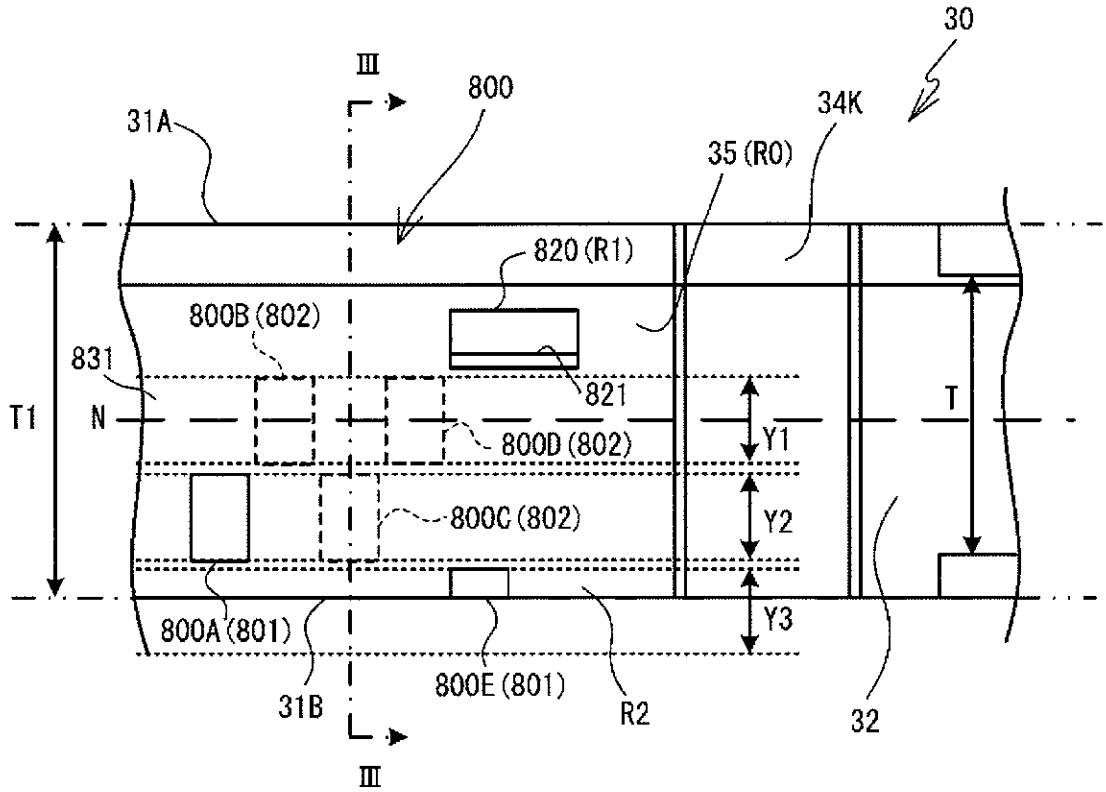
30
III
800
31A
34K
35 (R0)
820 (R1)
800B (802)
831
821
T1
N
800D (802)
Y1
T
Y2
800C (802)
Y3
800A (801)
31B
800E (801)
R2
32
III

[Fig. 19]

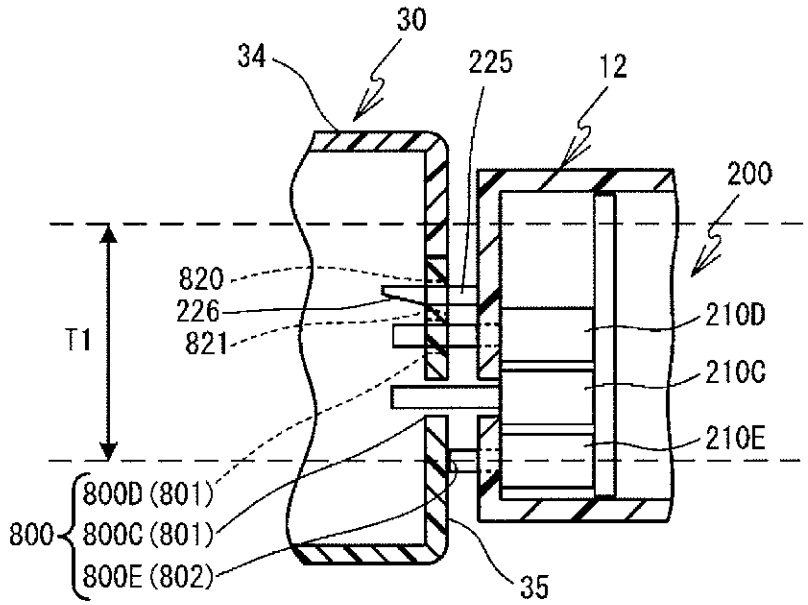
30
34
225
12
200
820
226
821
T1
210D
210C
210E
800
800D (801)
800C (801)
800E (802)
35

[Fig. 20]

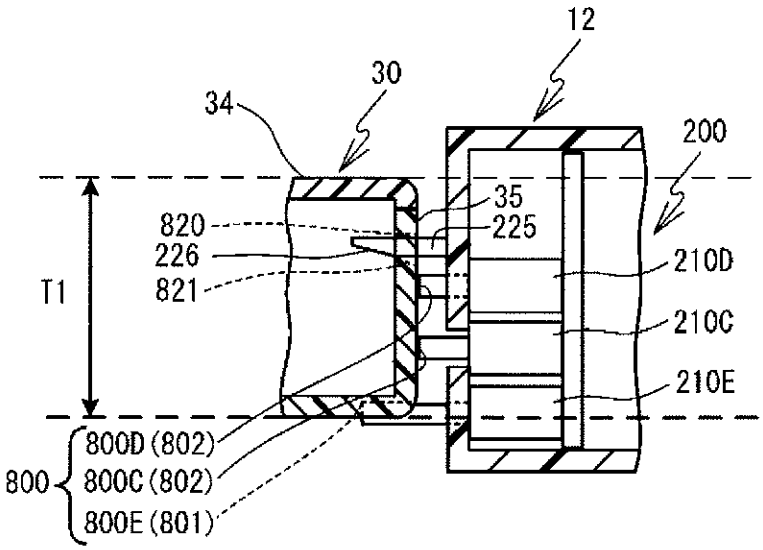
12
30
34
200
35
225
820
226
821
210D
210C
210E
T1
800
800D (802)
800C (802)
800E (801)

[Fig. 21]

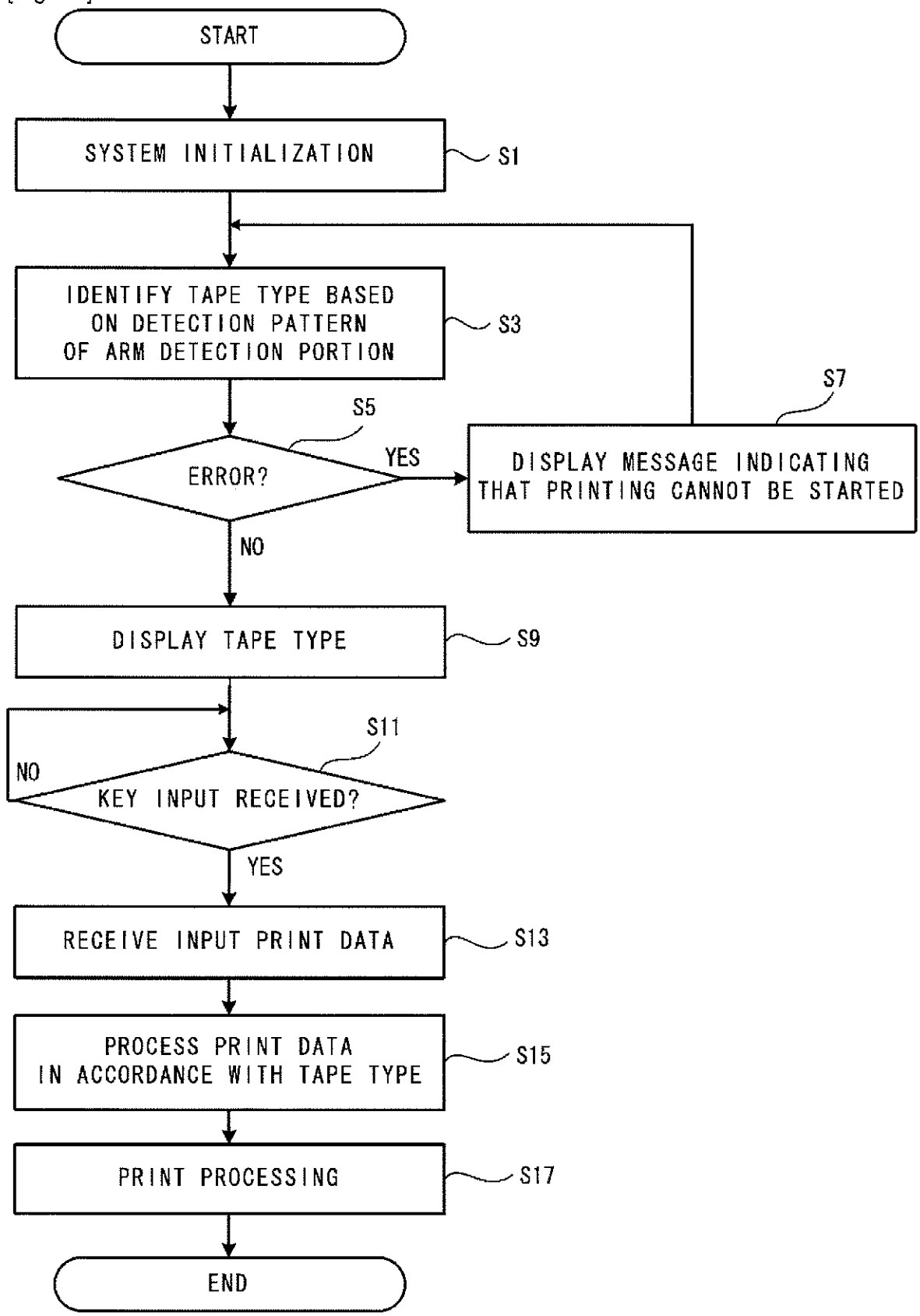
START
SYSTEM INITIALIZATION
S1
IDENTIFY TAPE TYPE BASED ON DETECTION PATTERN OF ARM DETECTION PORTION
S3
S5
ERROR?
YES
S7
DISPLAY MESSAGE INDICATING THAT PRINTING CANNOT BE STARTED
NO
DISPLAY TAPE TYPE
S9
S11
NO
KEY INPUT RECEIVED?
YES
RECEIVE INPUT PRINT DATA
S13
PROCESS PRINT DATA IN ACCORDANCE WITH TAPE TYPE
S15
PRINT PROCESSING
S17
END

[Fig. 22]

510

	LAMINATED	RECEPTOR	CHARACTER COLOR	REMARKS	SW1	SW2	SW3	SW4	SW5
0				ERROR1	0	0	0	0	0
1	6		BLACK		0	0	0	1	0
2	9		BLACK		1	0	0	1	0
3	12		BLACK		0	1	0	1	0
4	SPARE				1	1	0	1	0
5	9		COLOR		1	0	0	0	0
6	12		COLOR		0	1	0	0	0
7	SPARE				1	1	0	0	0
8		6	BLACK		0	0	1	1	0
9		9	BLACK		1	0	1	1	0
10		12	BLACK		0	1	1	1	0
11		3.5	COLOR		1	1	1	0	0
12		6	COLOR		0	0	1	0	0
13		9	COLOR		1	0	1	0	0
14		12	COLOR		0	1	1	0	0
15				ERROR2	1	1	1	1	0
16	18		BLACK		0	0	0	1	1
17	24		BLACK		1	0	0	1	1
18	36		BLACK		0	1	0	1	1
19	SPARE				1	1	0	1	1
20	18		COLOR		0	0	0	0	1
21	24		COLOR		1	0	0	0	1
22	36		COLOR		0	1	0	0	1
23	SPARE				1	1	0	0	1
24		18	COLOR		0	0	1	0	1
25		24	COLOR		1	0	1	0	1
26		36	COLOR		0	1	1	0	1
27		SPARE			1	1	1	0	1
28		18	BLACK		0	0	1	1	1
29		24	BLACK		1	0	1	1	1
30		36	BLACK		0	1	1	1	1
31				ERROR3	1	1	1	1	1

[Fig. 23]

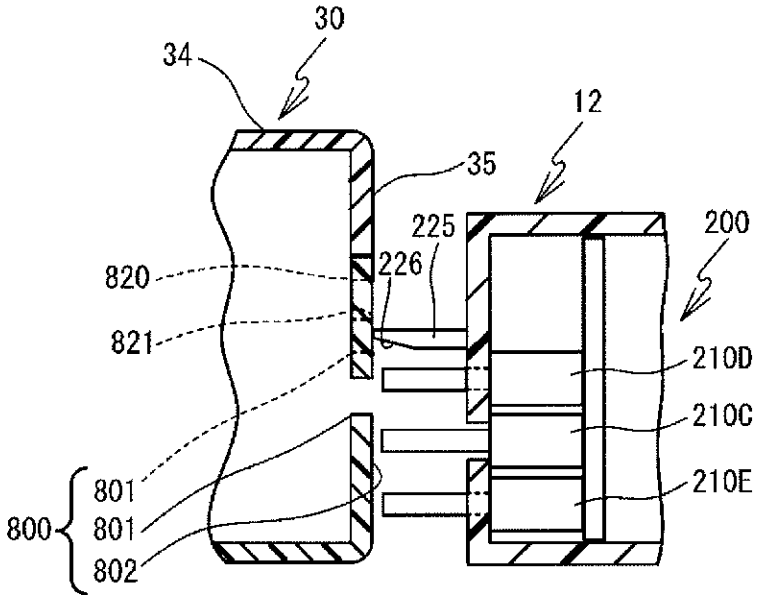
30
34
12
35
225
200
820
226
821
210D
210C
210E
801
800
801
802

[Fig. 24]

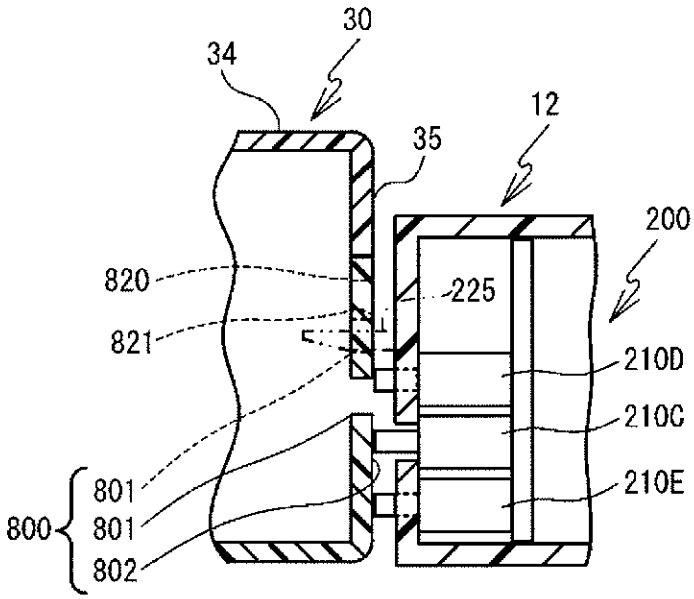
30
34
12
35
200
820
225
821
210D
210C
210E
801
800
801
802

[Fig. 25]

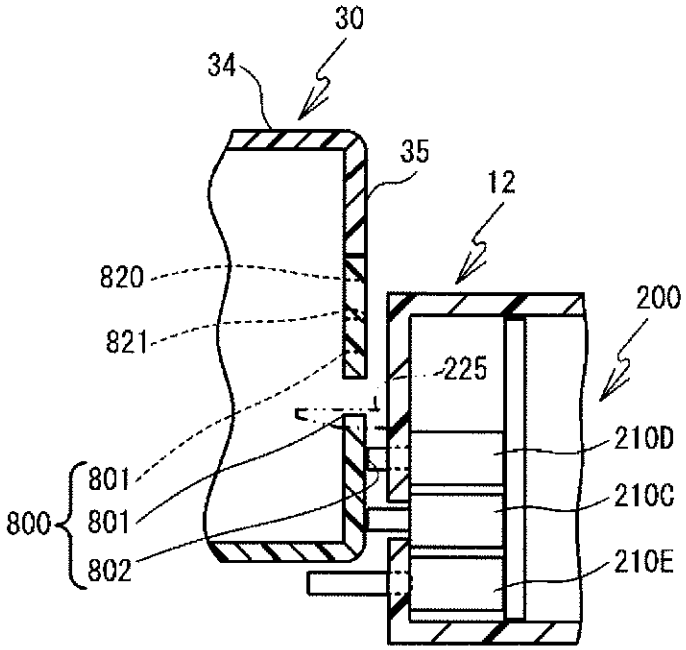
30
34
35
12
820
821
200
225
210D
210C
210E
800
801
801
802

[Fig. 26]

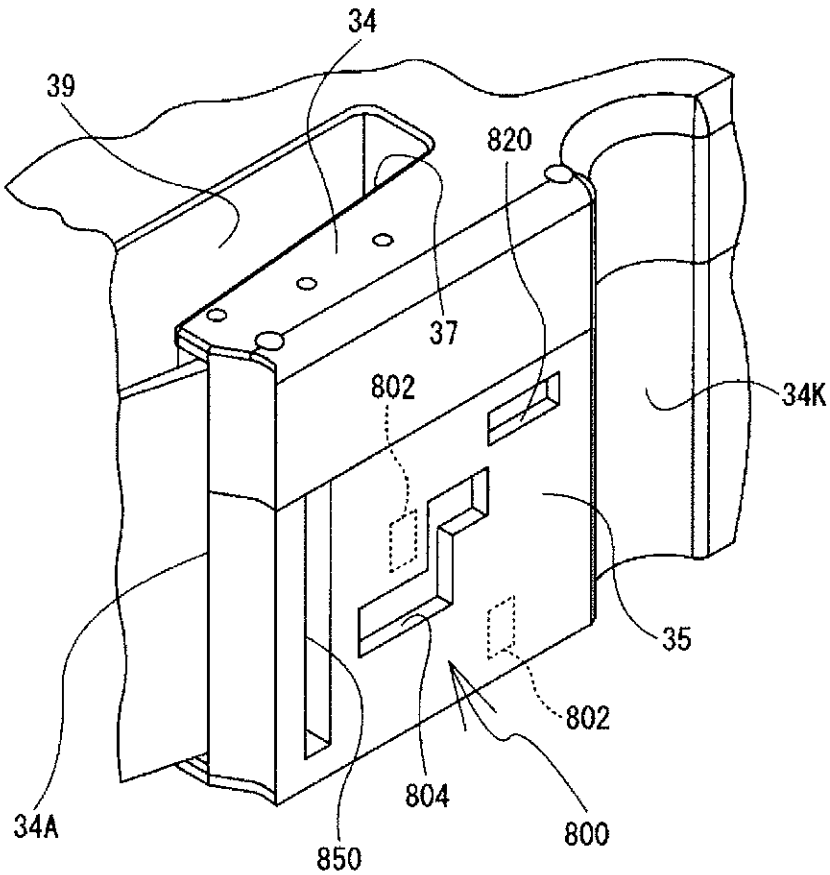
34
39
820
37
802
34K
35
802
804
34A
850
800

[Fig. 27]

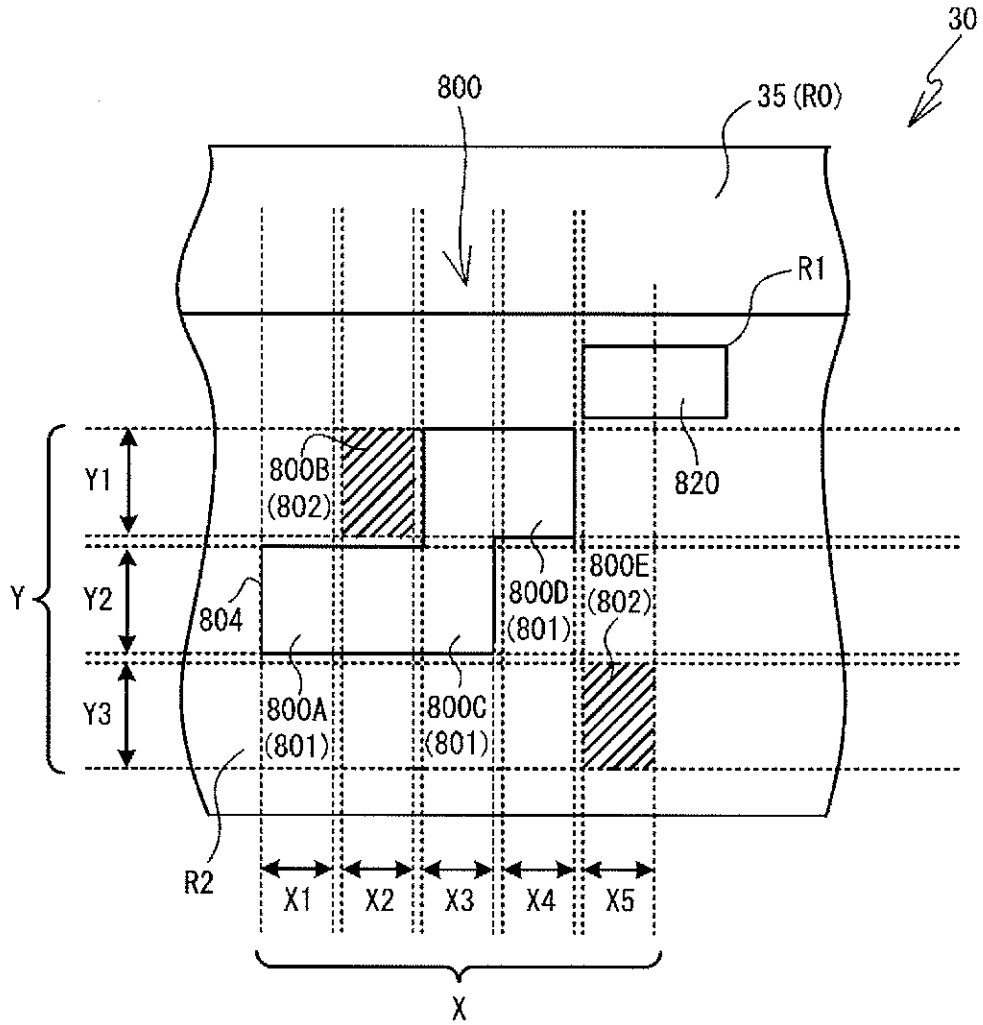
30
800
35 (R0)
R1
820
800B
(802)
800D
(801)
800E
(802)
804
800A
(801)
800C
(801)
R2
Y1
Y2
Y3
Y
X1
X2
X3
X4
X5
X

[Fig. 28]

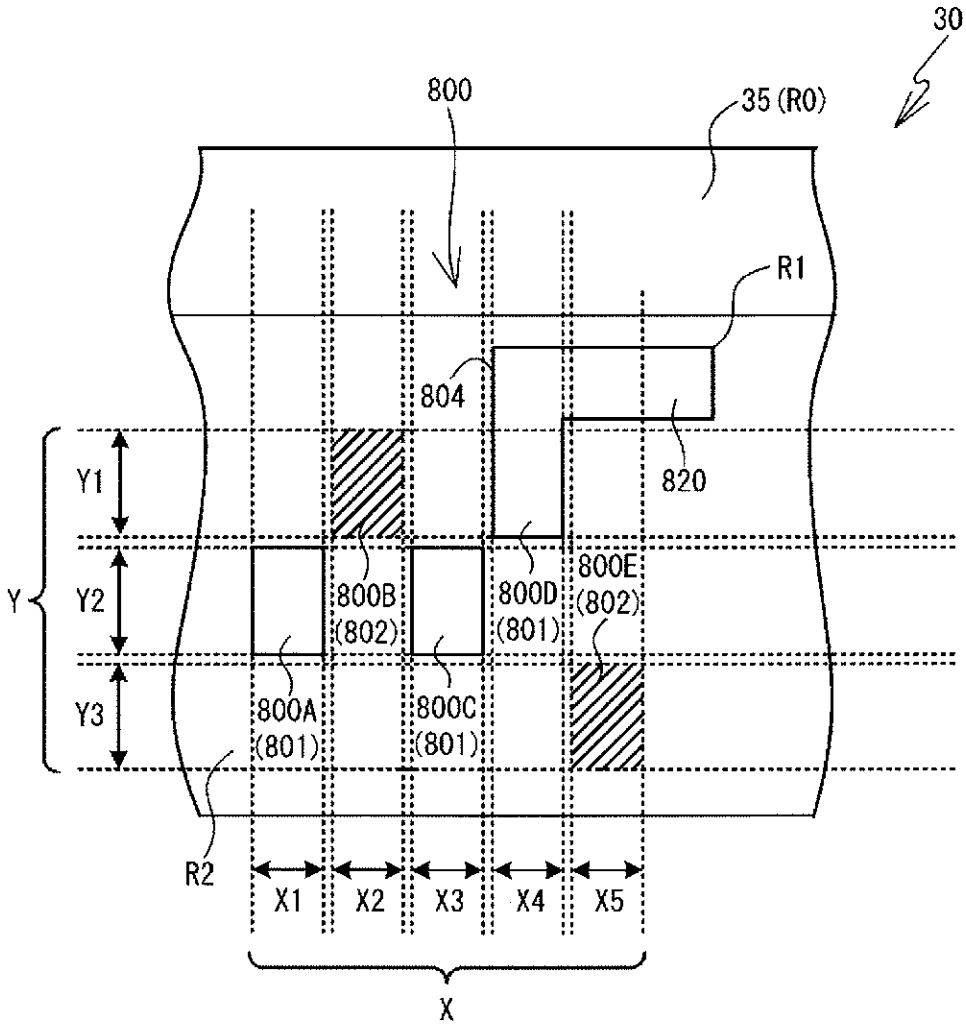
30
800
35 (R0)
R1
804
820
Y1
Y2
Y3
Y
800B
(802)
800D
(801)
800E
(802)
800A
(801)
800C
(801)
R2
X1
X2
X3
X4
X5
X

[Fig. 29]

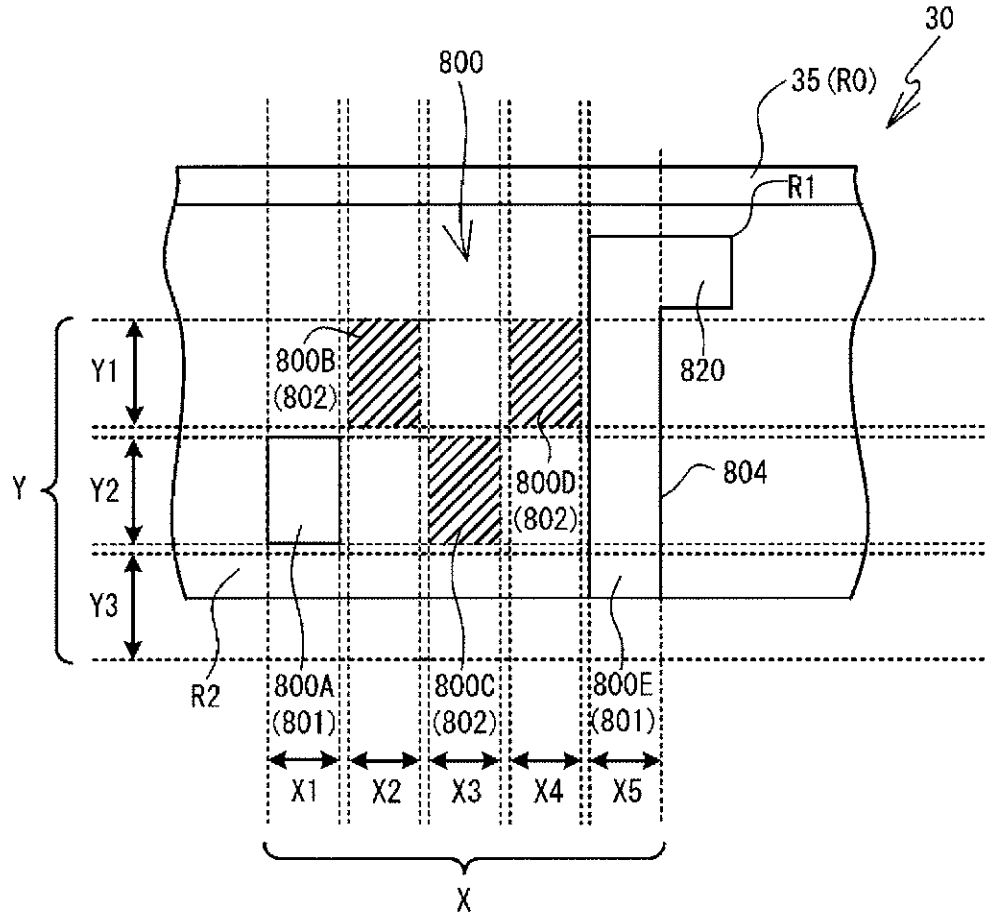
30
800
35 (R0)
R1
820
800B
(802)
800D
(802)
804
Y1
Y2
Y3
Y
R2
800A
(801)
800C
(802)
800E
(801)
X1
X2
X3
X4
X5
X

[Fig. 30]

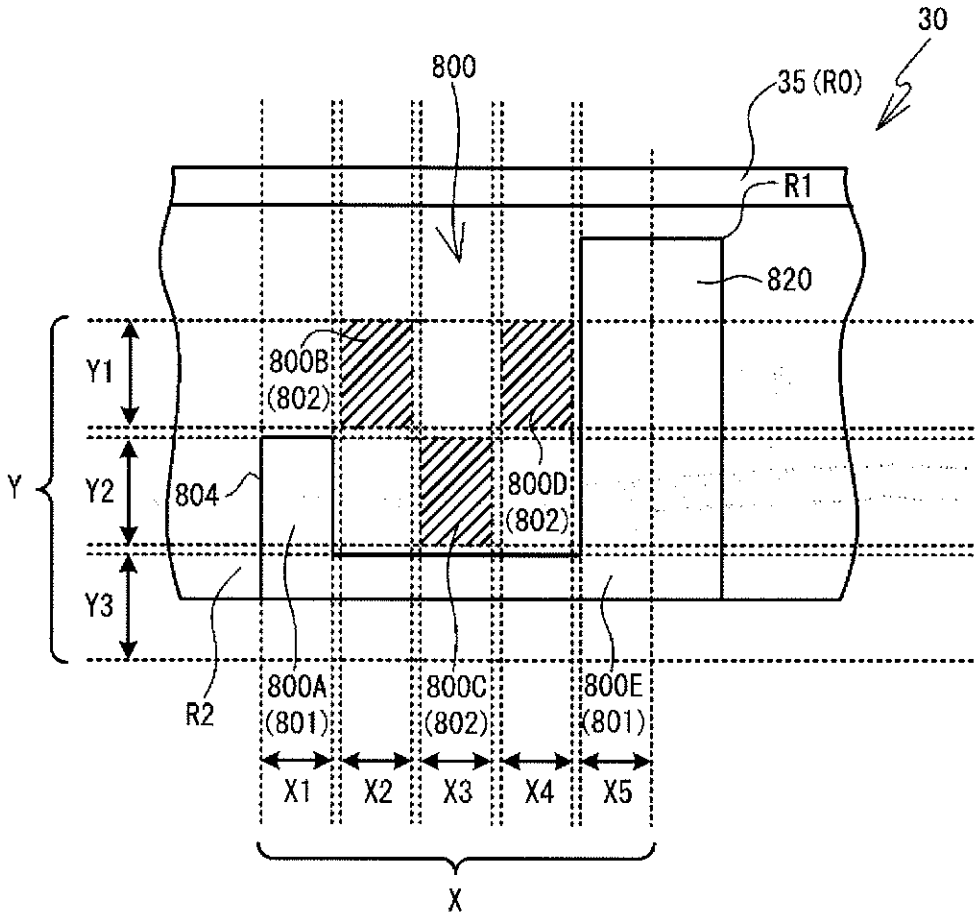
30
800
35 (RO)
R1
820
Y1
800B
(802)
Y
Y2
804
800D
(802)
Y3
R2
800A
(801)
800C
(802)
800E
(801)
X1
X2
X3
X4
X5
X

[Fig. 31]

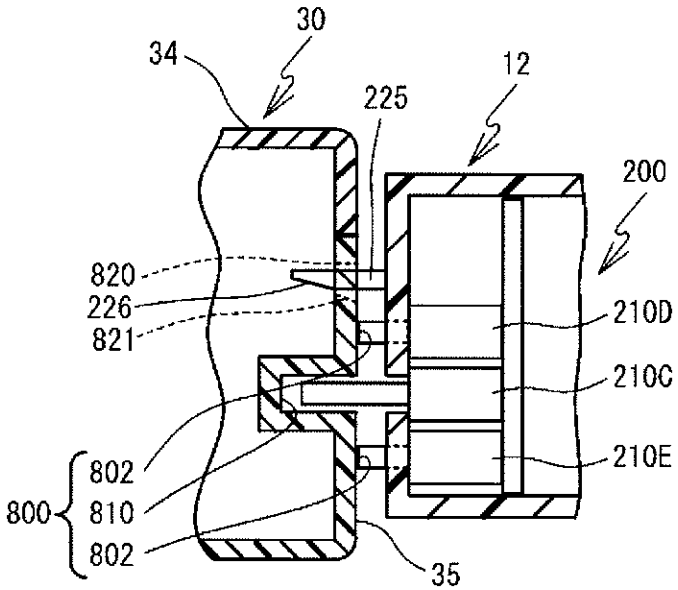
30
34
225
12
200
820
226
821
210D
210C
210E
800
802
810
802
35