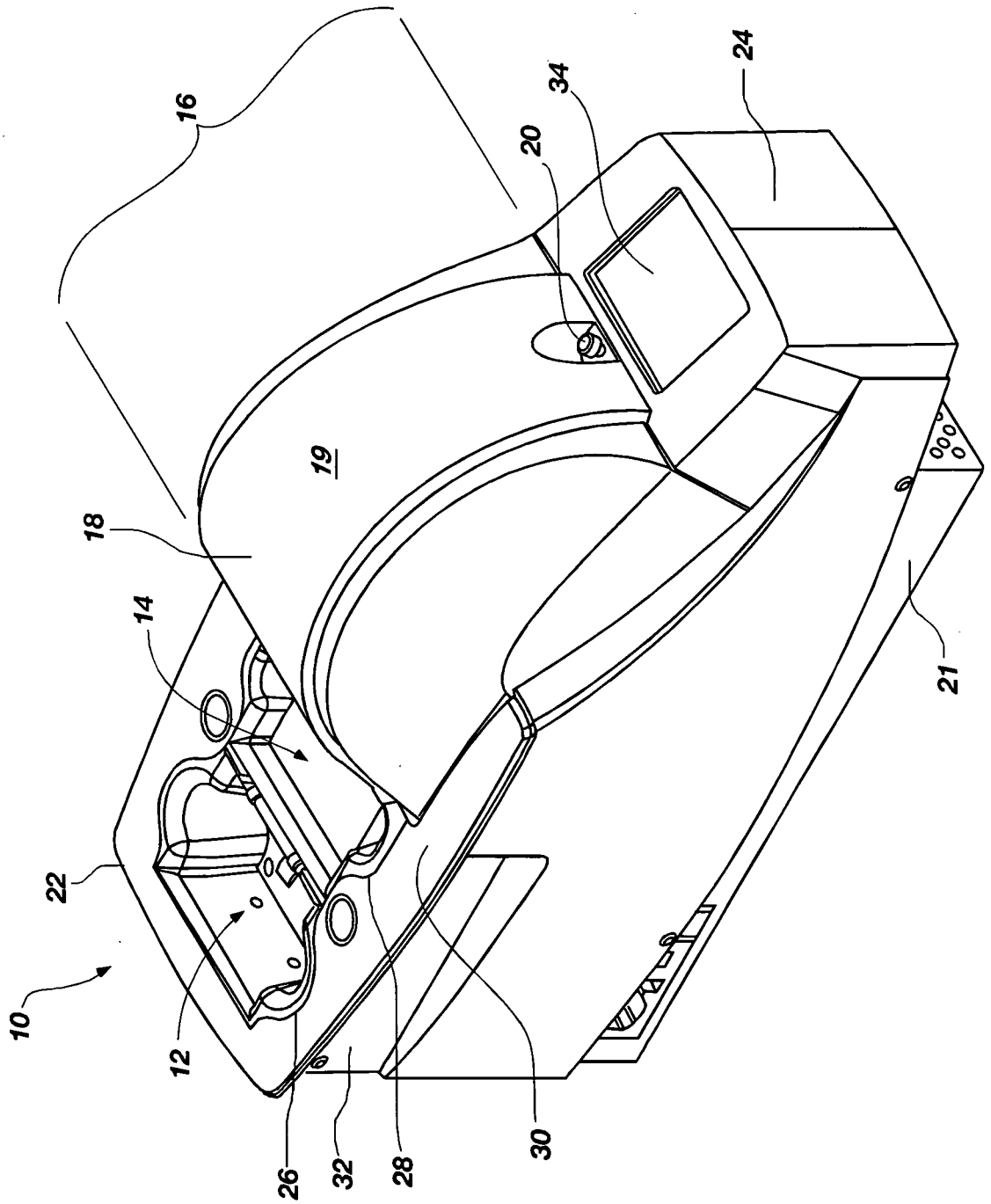

FIG. 1

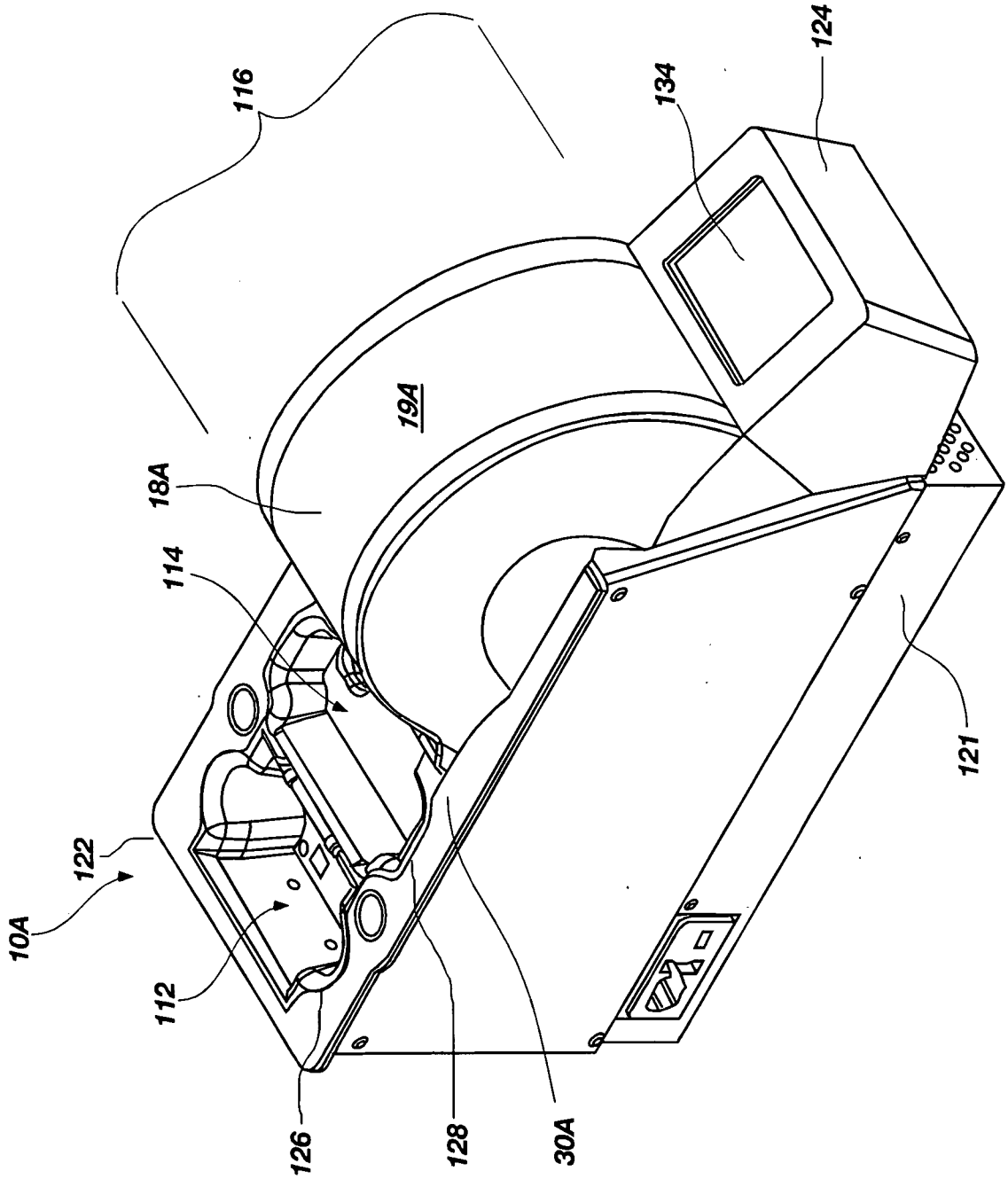

FIG. 2

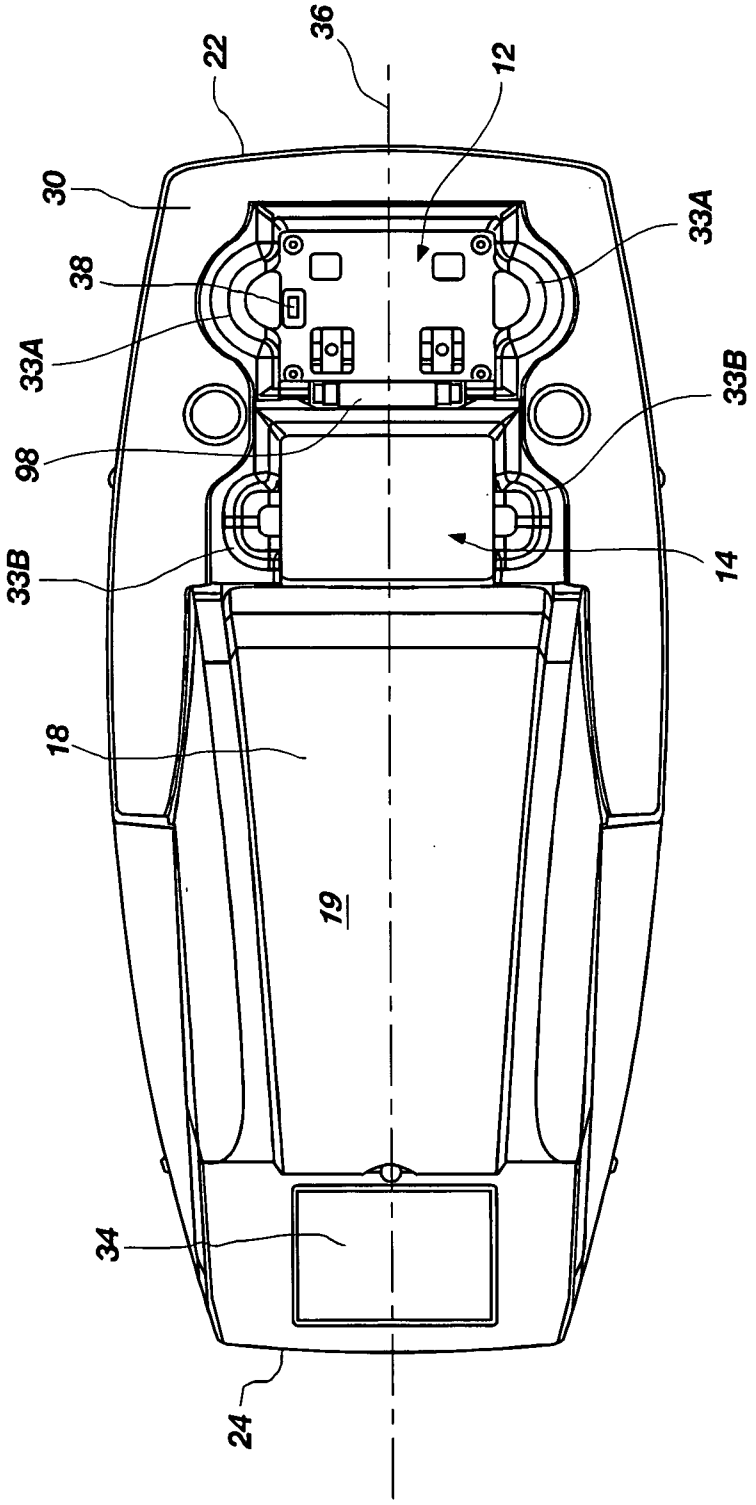

FIG. 3

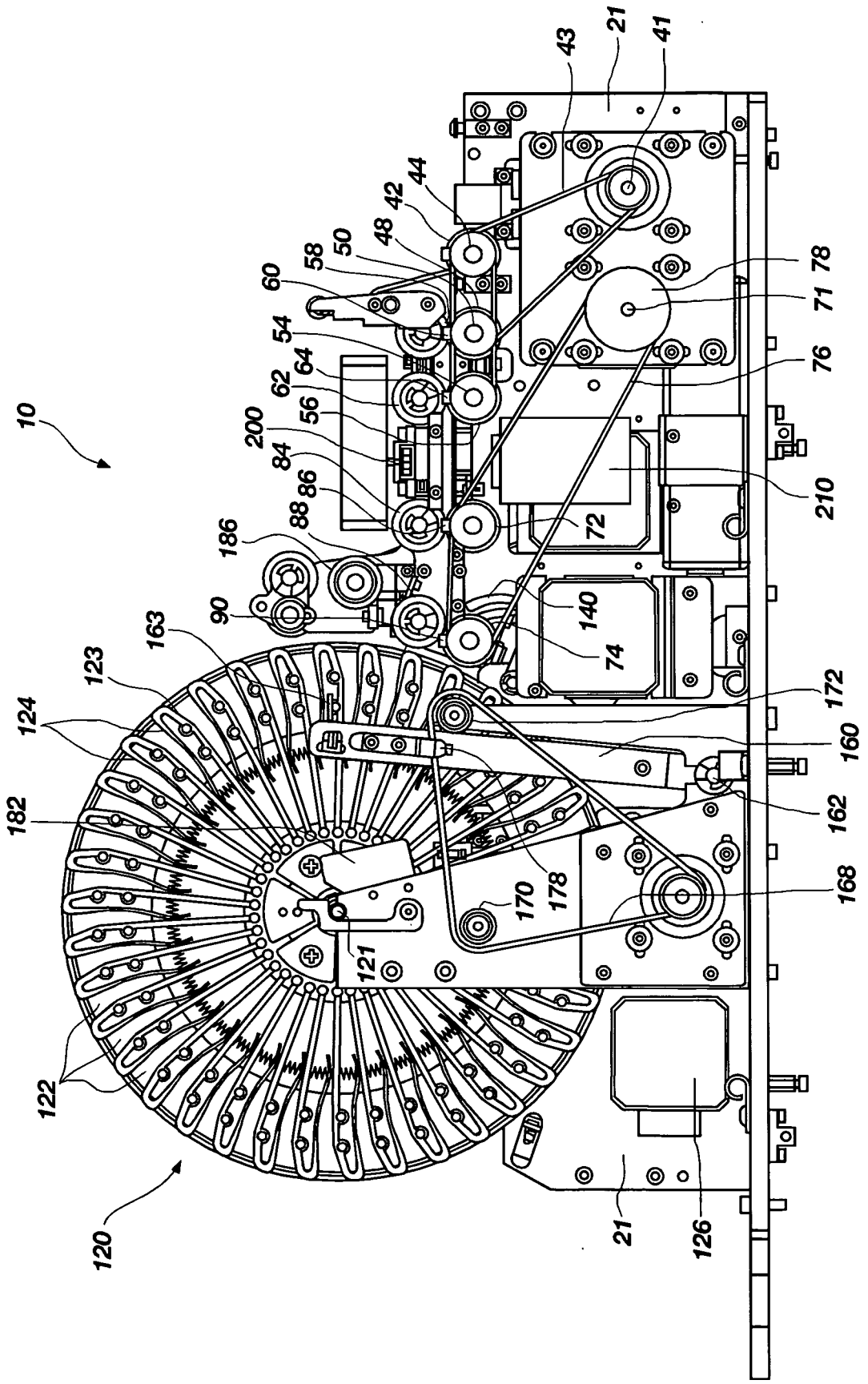
10
120
122
124
182
123
163
90
186
88
86
84
200
56
62
64
54
60
58
50
48
42
44
43
21
41
78
71
76
210
72
140
74
172
160
162
168
178
170
121
126
21

FIG. 4A

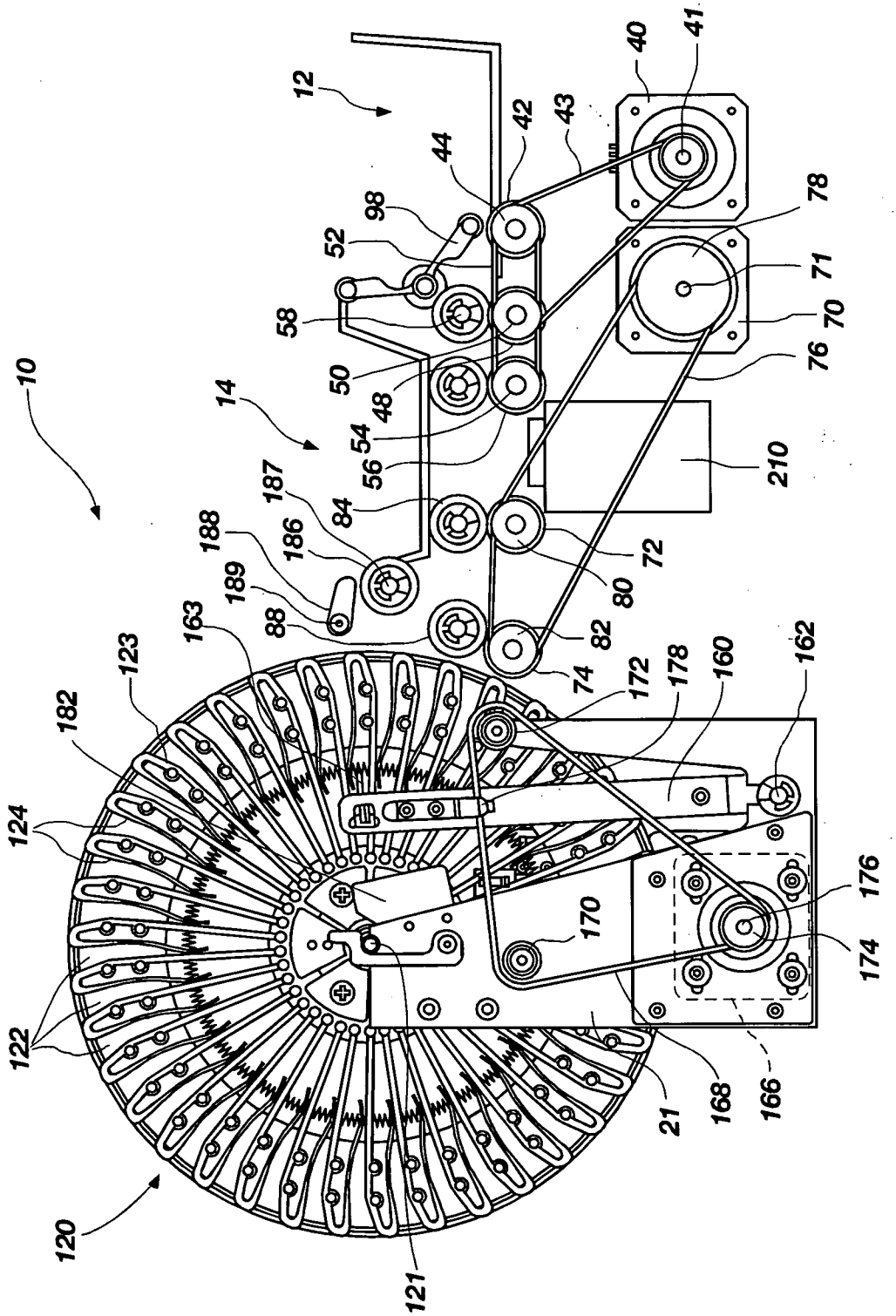
10
12
14
40
41
42
43
44
98
52
58
50
48
54
56
187
84
188
186
189
88
163
123
182
124
122
120
121
78
71
70
76
210
72
80
82
74
172
178
160
162
176
174
170
168
166
21

FIG. 4B

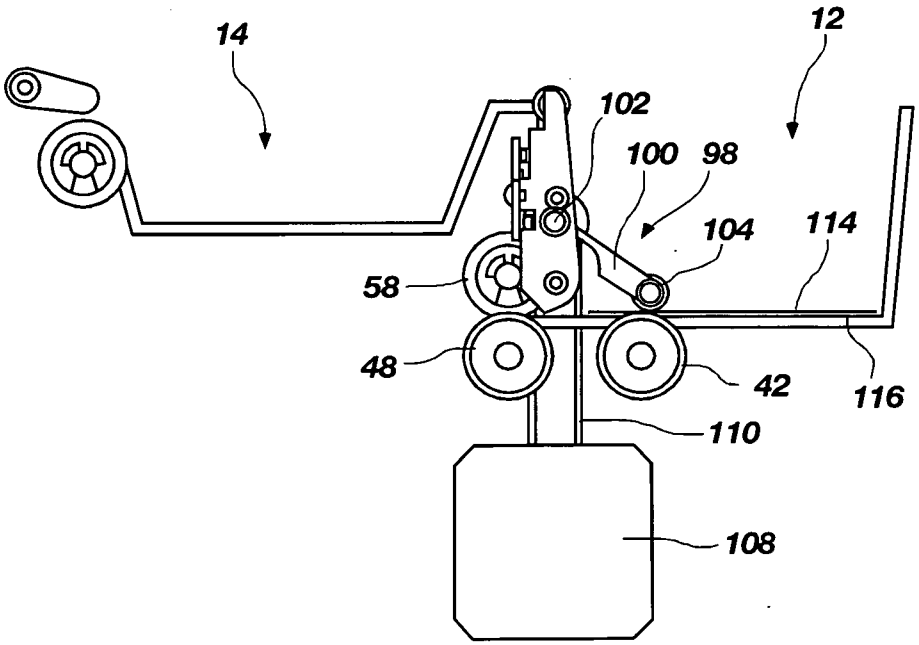
14
12
102
100
98
104
114
58
48
42
116
110
108

FIG. 5

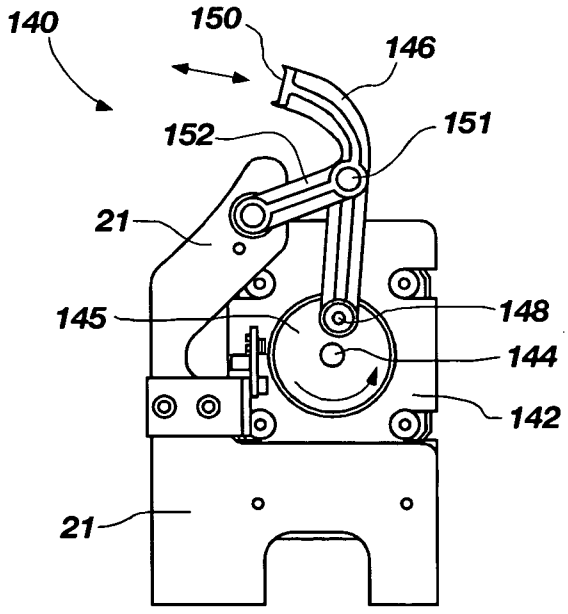
140
150
146
152
151
21
145
148
144
142
21

FIG. 6

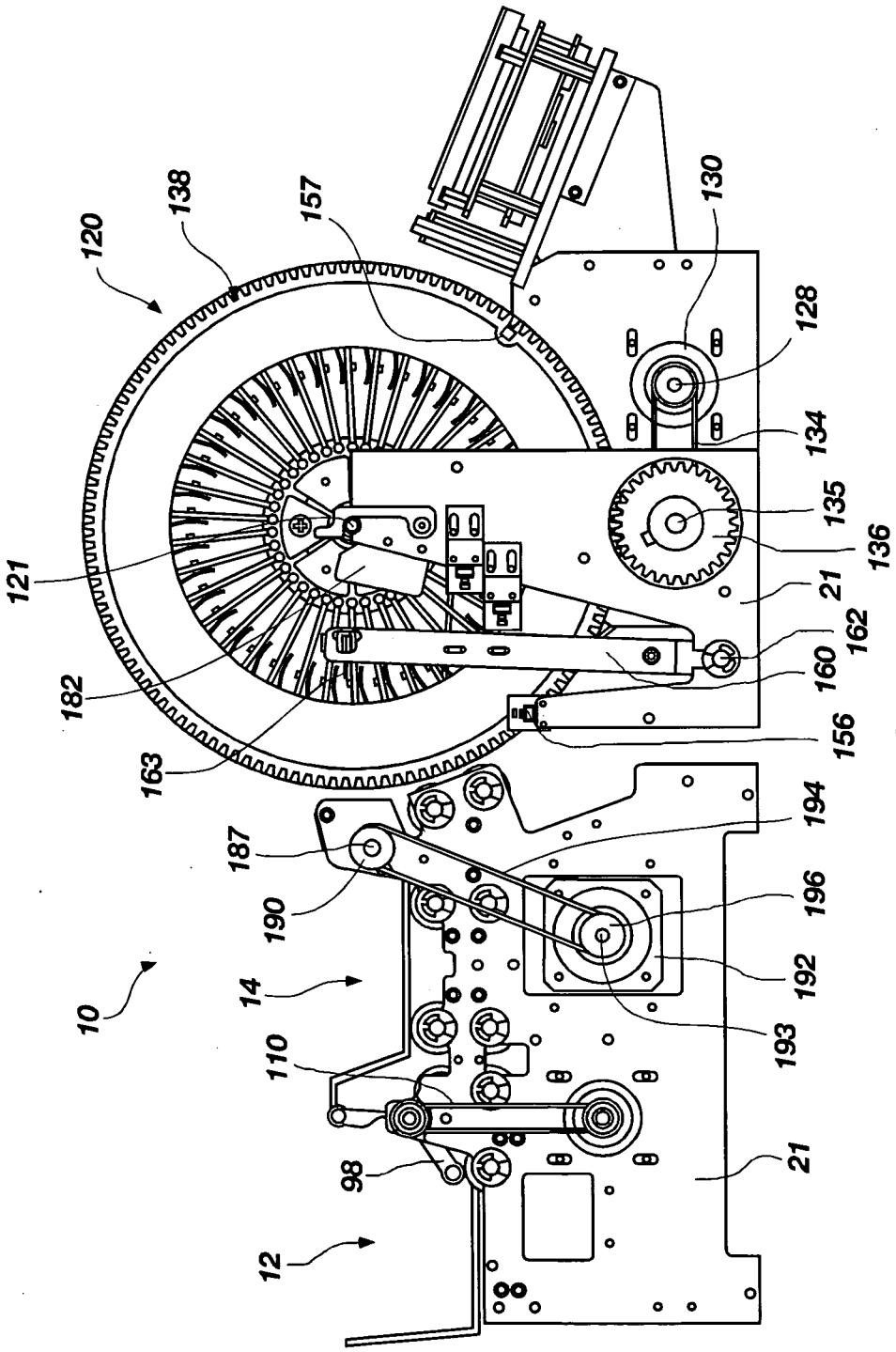
120
138
157
130
128
134
135
136
21
162
160
156
121
182
163
194
187
190
196
192
193
10
14
110
98
12
21

FIG. 7

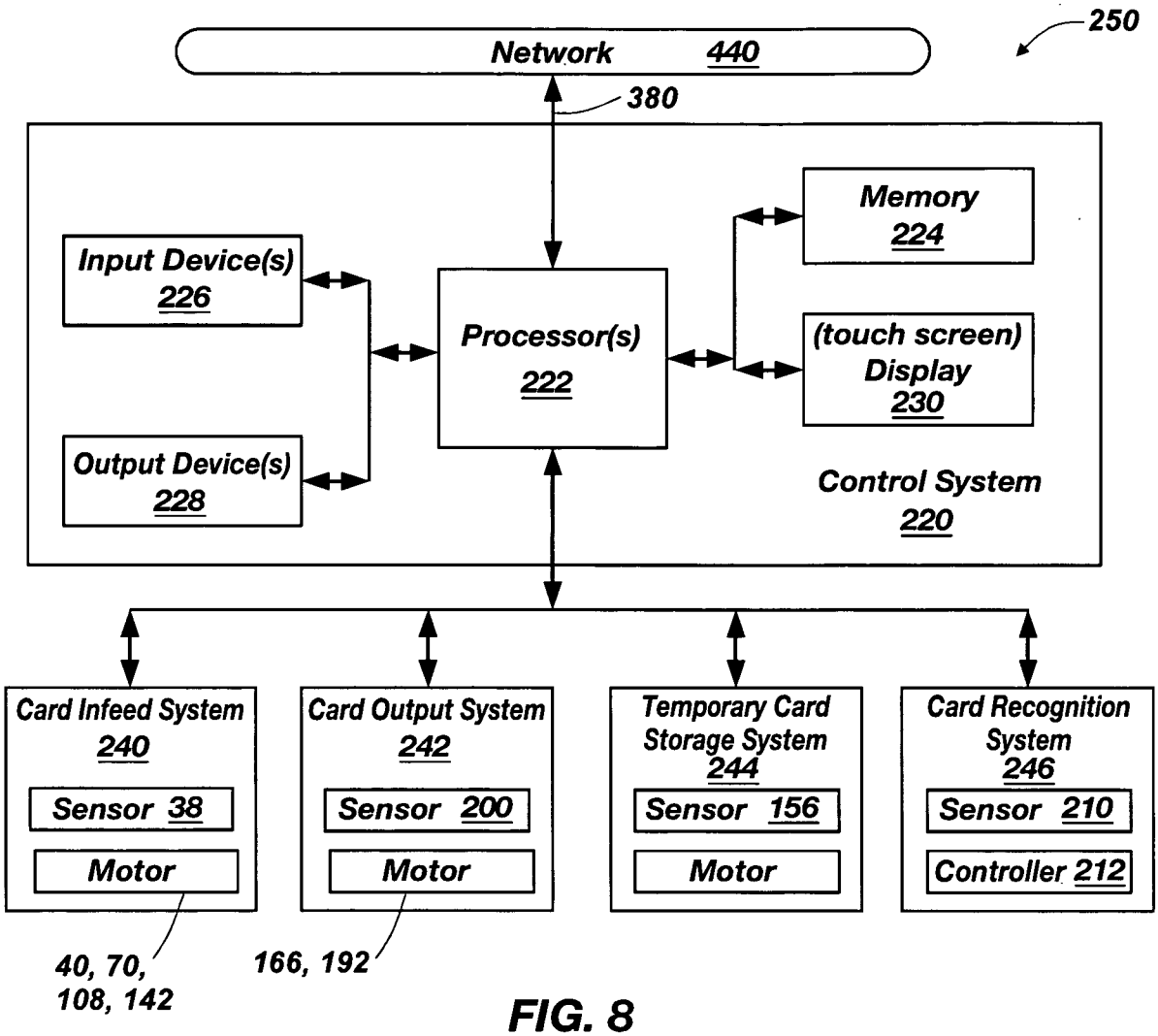
250
Network 440
380
Memory 224
Input Device(s) 226
Processor(s) 222
(touch screen) Display 230
Output Device(s) 228
Control System 220
Card Infeed System 240
Sensor 38
Motor
Card Output System 242
Sensor 200
Motor
Temporary Card Storage System 244
Sensor 156
Motor
Card Recognition System 246
Sensor 210
Controller 212
40, 70, 108, 142
166, 192

FIG. 8

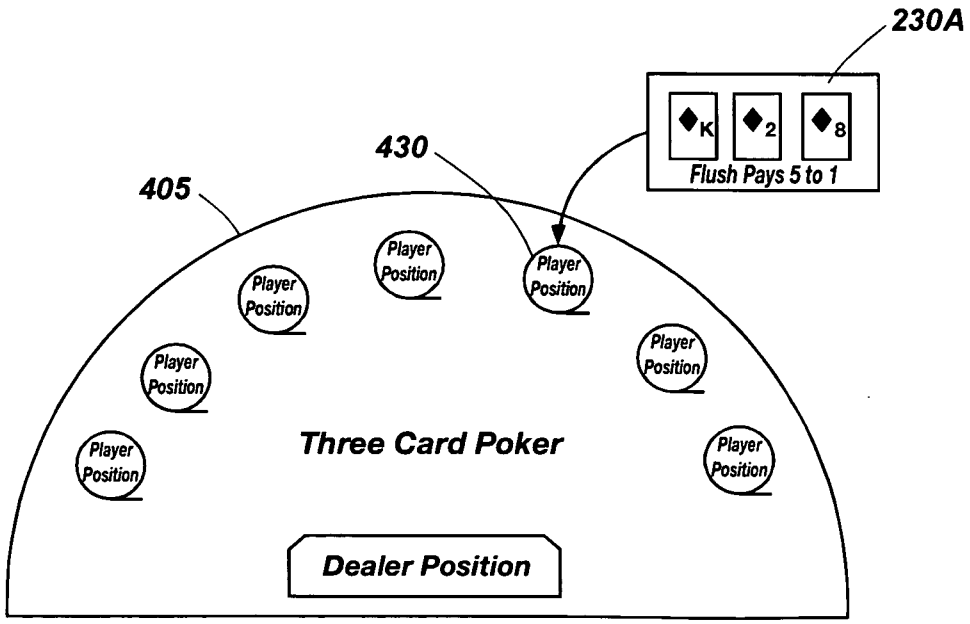
230A
Flush Pays 5 to 1
430
405
Player Position
Three Card Poker
Dealer Position

FIG. 9

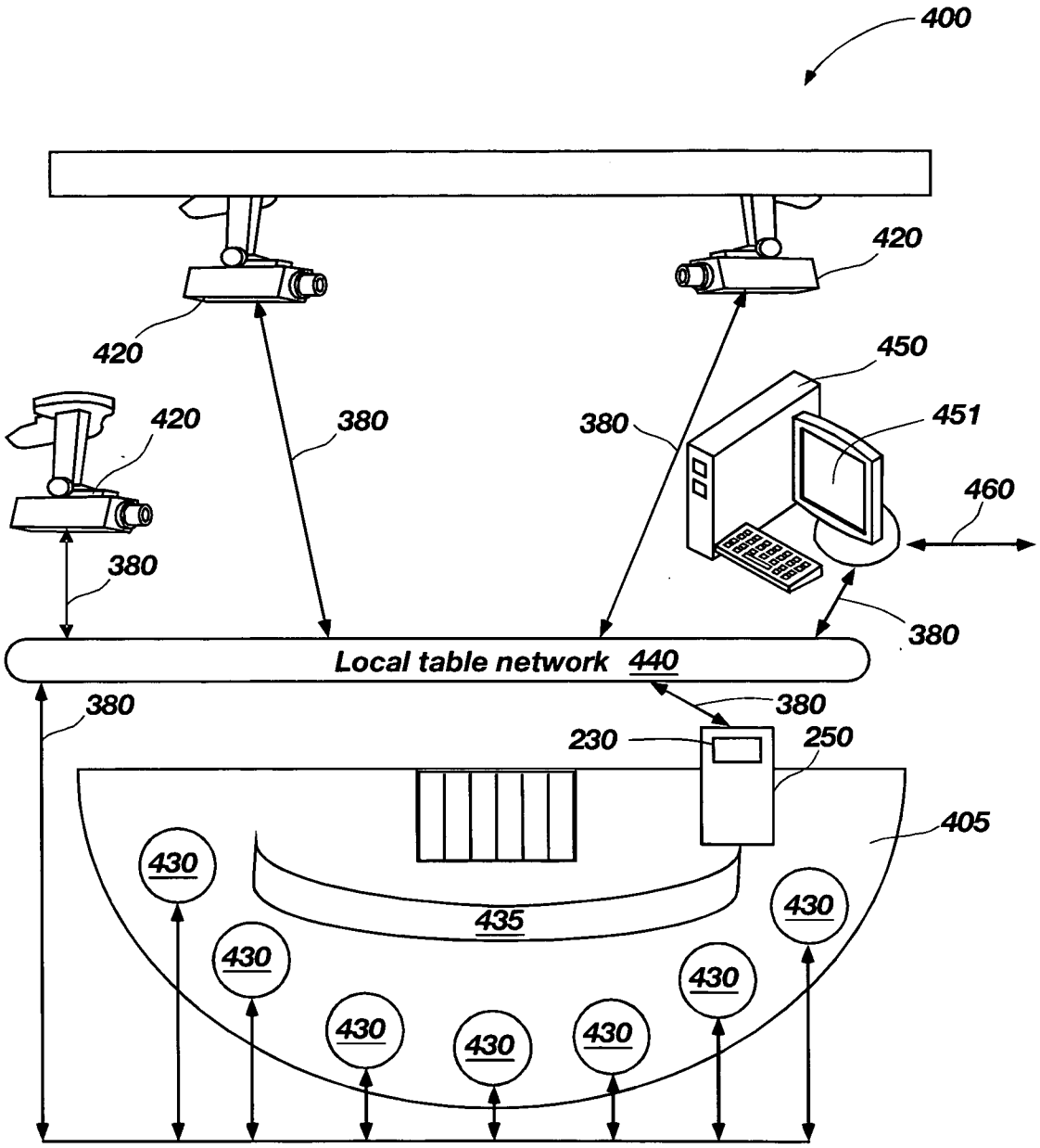
400
420
420
420
450
451
460
380
380
380
380
380
380
Local table network 440
230
250
405
430
430
430
430
430
430
435

FIG. 10

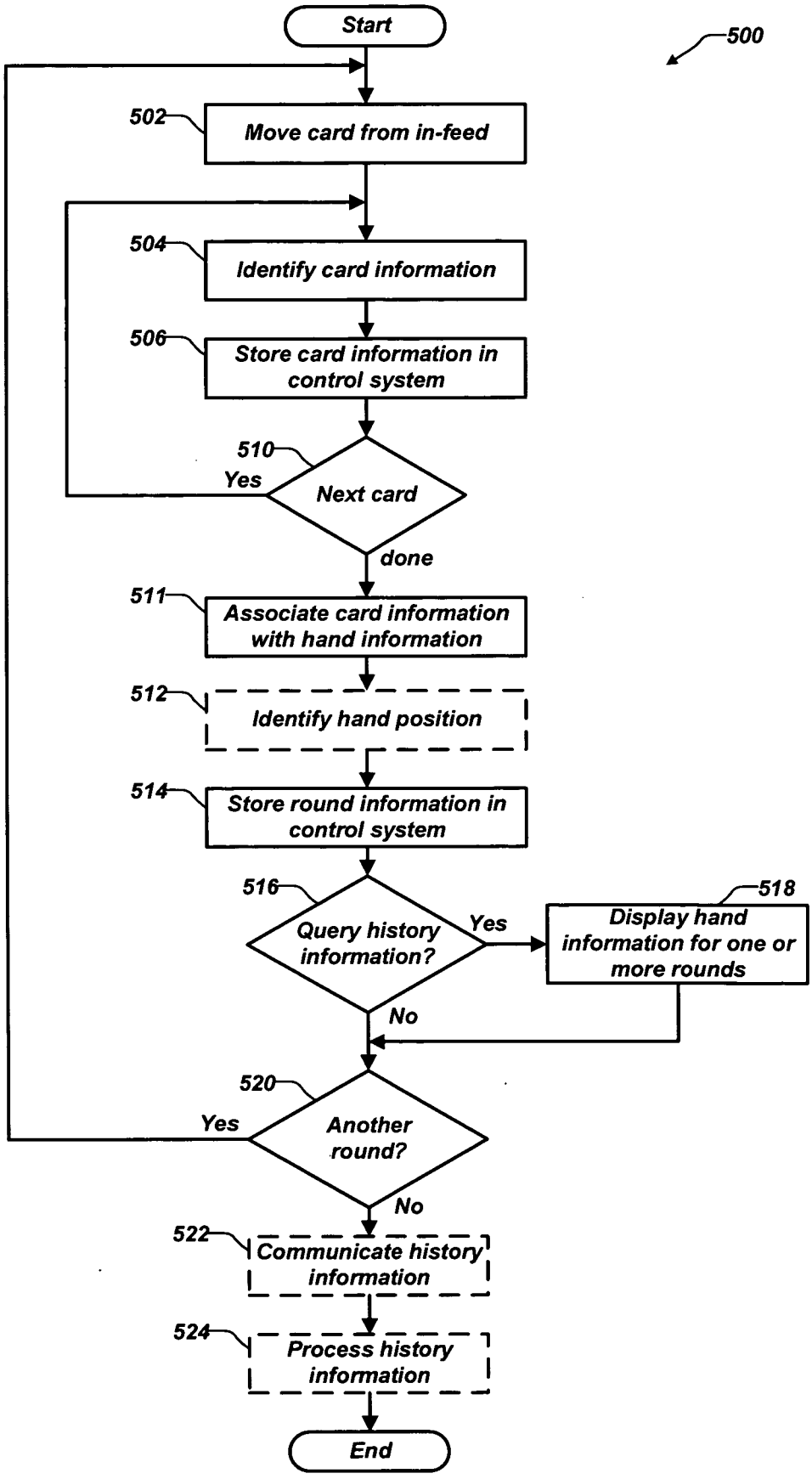
Start
500
502
Move card from in-feed
504
Identify card information
506
Store card information in control system
510
Yes
Next card
done
511
Associate card information with hand information
512
Identify hand position
514
Store round information in control system
516
Query history information?
Yes
518
Display hand information for one or more rounds
No
520
Yes
Another round?
No
522
Communicate history information
524
Process history information
End

FIG. 11