(12) INTERNATIONAL APPLICATION PUBLISHED UNDER THE PATENT COOPERATION TREATY (PCT)

(19) World Intellectual Property Organization
International Bureau

(43) International Publication Date
23 March 2006 (23.03.2006)

PCT

(10) International Publication Number
WO 2006/031500 A2

(51) International Patent Classification:
A61M 5/142 (2006.01)

(21) International Application Number:
PCT/US2005/031658

(22) International Filing Date:
7 September 2005 (07.09.2005)

(25) Filing Language: English

(26) Publication Language: English

(30) Priority Data:
60/609,081 10 September 2004 (10.09.2004) US

(71) Applicant *(for all designated States except US)*: **BECTON, DICKINSON AND COMPANY** [US/US]; 1 Becton Drive, Franklin Lakes, NJ 07417-1880 (US).

(72) Inventors; and

(75) Inventors/Applicants *(for US only)*: **SULLIVAN, Vincent, J.** [US/US]; 106 Ecklin Lane, Cary, NC 27519 (US). **JIANG, Ge** [CN/US]; 3204 Stonesthrow Lane, Apt. 11, Durham, NC 27713 (US). **FERRITER, Matthew, S.** [US/US]; 8111 North Hound Court, Chapel Hill, NC 27516 (US). **POWELL, Kenneth, G.** [US/US]; 4513 Wood Valley Drive, Raleigh, NC 27613 (US). **KINSEY, Spencer, P.** [US/US]; 7 Bridle Path Lane, Vernon, CT 06066 (US). **SAHI, Carl, R.** [US/US]; 389 High Street, Coventry, CT 06238 (US). **POLIDORO, John, M.** [US/US]; 232 Woodmont Drive, Coventry, CT 06238 (US).

(74) Agent: **HIGHET, David, W.**; Becton, Dickinson and Company, 1 Becton Drive, Franklin Lakes, NJ 07417-1880 (US).

(81) Designated States *(unless otherwise indicated, for every kind of national protection available)*: AE, AG, AL, AM, AT, AU, AZ, BA, BB, BG, BR, BW, BY, BZ, CA, CH, CN, CO, CR, CU, CZ, DE, DK, DM, DZ, EC, EE, EG, ES, FI, GB, GD, GE, GH, GM, HR, HU, ID, IL, IN, IS, JP, KE, KG, KM, KP, KR, KZ, LC, LK, LR, LS, LT, LU, LV, MA, MD, MG, MK, MN, MW, MX, MZ, NA, NG, NI, NO, NZ, OM, PG, PH, PL, PT, RO, RU, SC, SD, SE, SG, SK, SL, SM, SY, TJ, TM, TN, TR, TT, TZ, UA, UG, US, UZ, VC, VN, YU, ZA, ZM, ZW.

(84) Designated States *(unless otherwise indicated, for every kind of regional protection available)*: ARIPO (BW, GH, GM, KE, LS, MW, MZ, NA, SD, SL, SZ, TZ, UG, ZM, ZW), Eurasian (AM, AZ, BY, KG, KZ, MD, RU, TJ, TM), European (AT, BE, BG, CH, CY, CZ, DE, DK, EE, ES, FI, FR, GB, GR, HU, IE, IS, IT, LT, LU, LV, MC, NL, PL, PT, RO, SE, SI, SK, TR), OAPI (BF, BJ, CF, CG, CI, CM, GA, GN, GQ, GW, ML, MR, NE, SN, TD, TG).

[Continued on next page]

(54) Title: RECONSTITUTING INFUSION DEVICE

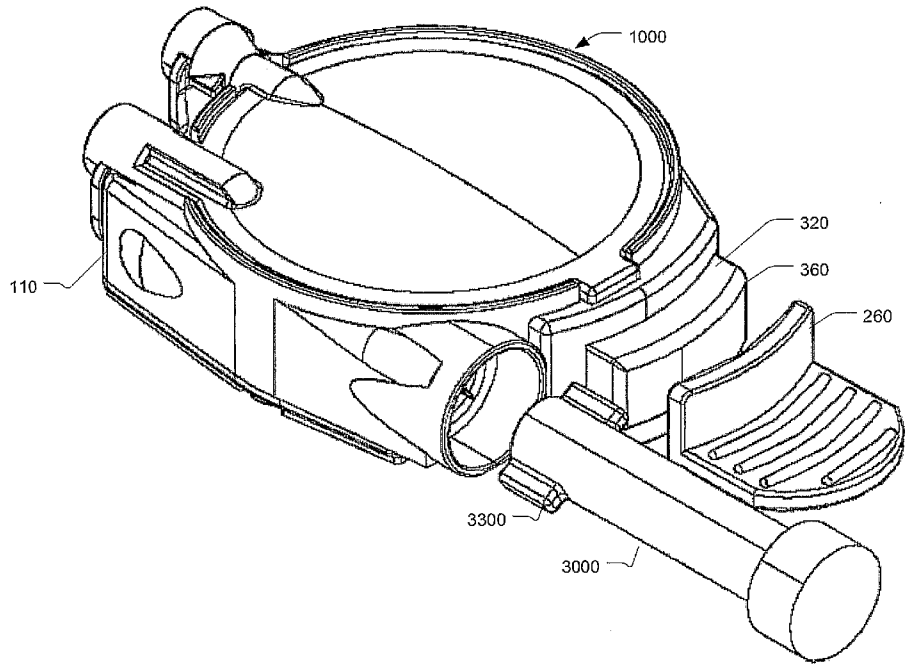

(57) Abstract: A system and method for a patch-like, self-contained multi-component substance infusion device which provides one or more substantially hidden patient needles which can be placed in fluid communication with a fluid reservoir assembly that includes a rigid bladder portion used in conjunction with a non-distensible bladder film, such as a metallized film. The device can he attached to a skin surface via an adhesive contact and a pressurization system provides a pressure to the contents of a fluid reservoir assembly. Improvements to dry powdered formulations for reconstitution for preferred use in the device are also disclosed.

WO 2006/031500 A2

Declaration under Rule 4.17:

— *of inventorship (Rule 4.17(iv)) for US only*

Published:

— *without international search report and to be republished upon receipt of that report*

For two-letter codes and other abbreviations, refer to the "Guidance Notes on Codes and Abbreviations" appearing at the beginning of each regular issue of the PCT Gazette.