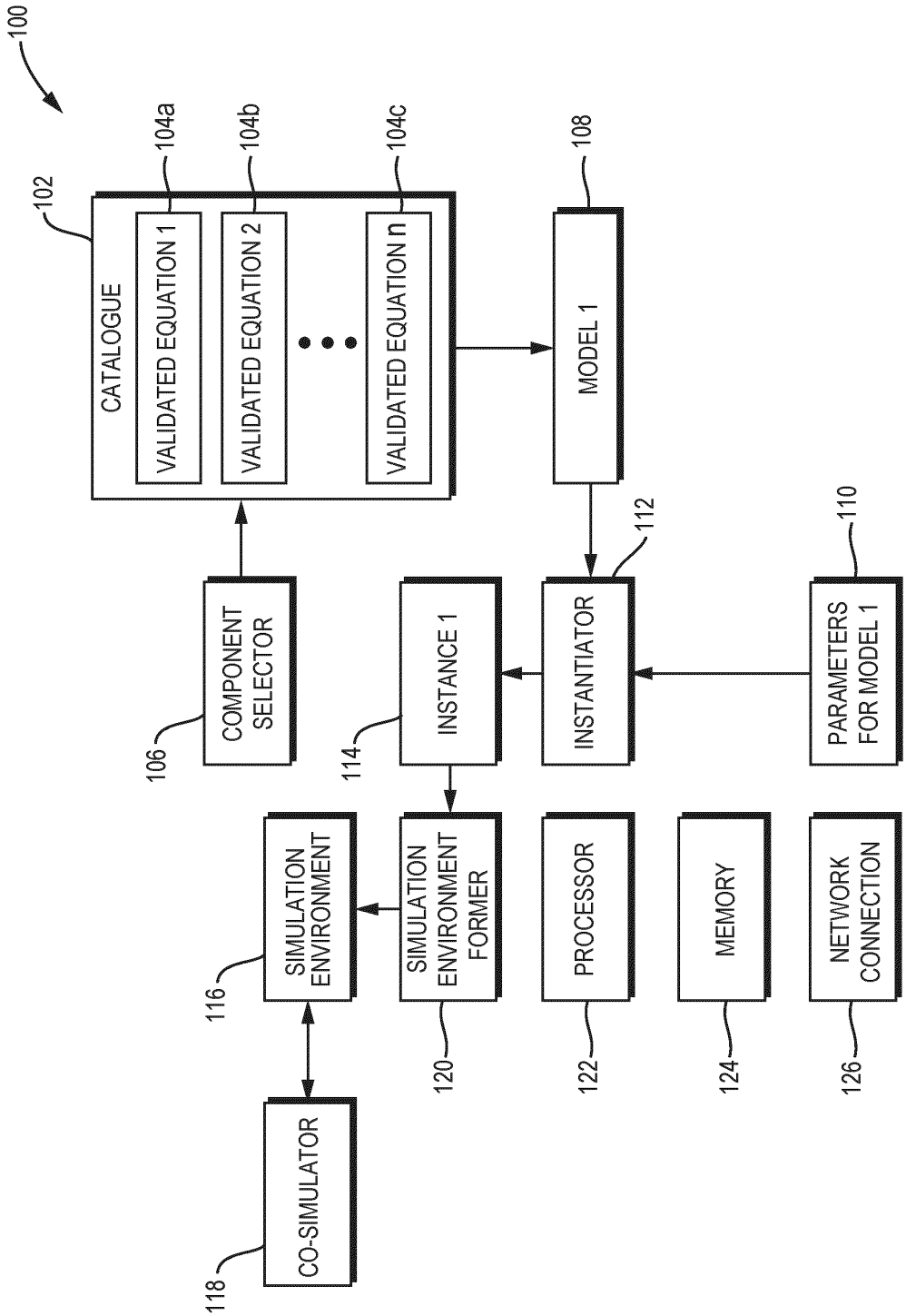
100
102
CATALOGUE
VALIDATED EQUATION 1
VALIDATED EQUATION 2
VALIDATED EQUATION n
104a
104b
104c
108
MODEL 1
106
COMPONENT SELECTOR
114
INSTANCE 1
112
INSTANTIATOR
110
PARAMETERS FOR MODEL 1
116
SIMULATION ENVIRONMENT
SIMULATION ENVIRONMENT FORMER
PROCESSOR
MEMORY
NETWORK CONNECTION
118
CO-SIMULATOR
120
122
124
126

FIG. 1

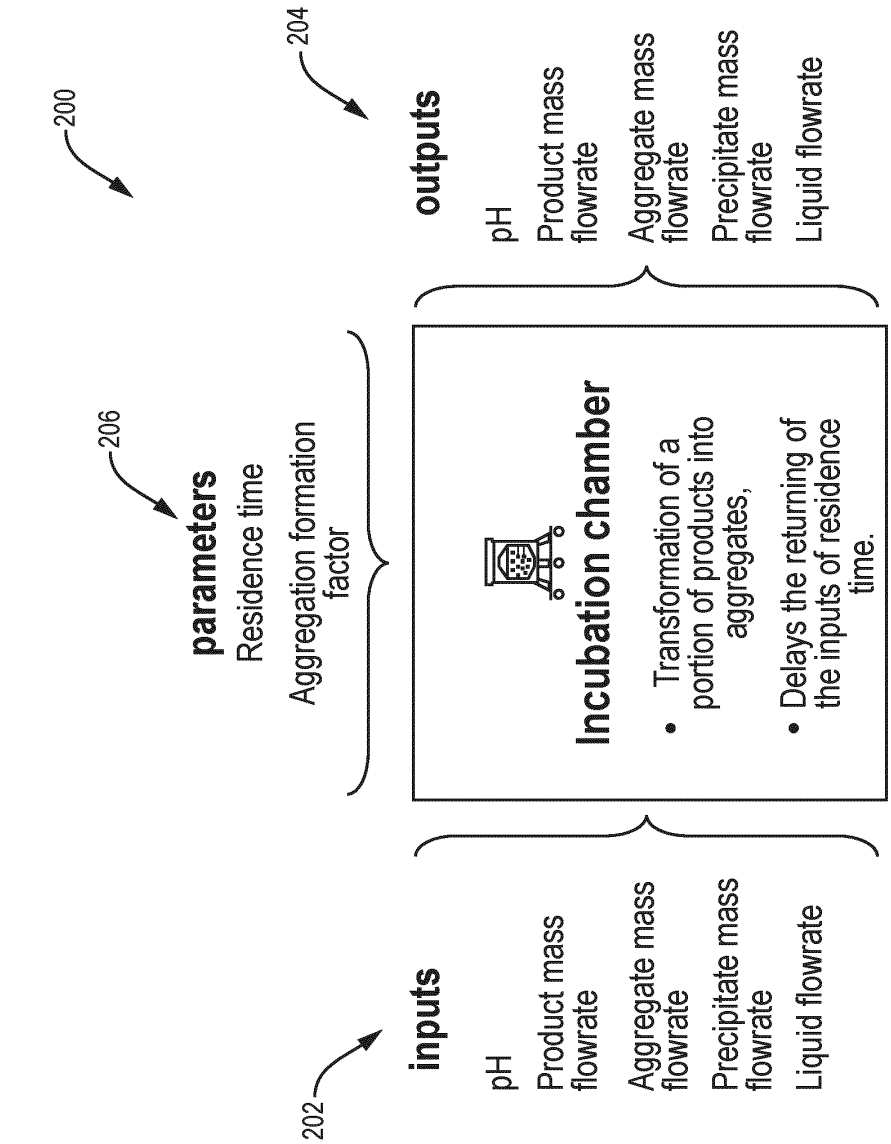
200
204
206
202
inputs
pH
Product mass flowrate
Aggregate mass flowrate
Precipitate mass flowrate
Liquid flowrate
parameters
Residence time
Aggregation formation factor
Incubation chamber
• Transformation of a portion of products into aggregates,
• Delays the returning of the inputs of residence time.
outputs
pH
Product mass flowrate
Aggregate mass flowrate
Precipitate mass flowrate
Liquid flowrate

FIG. 2

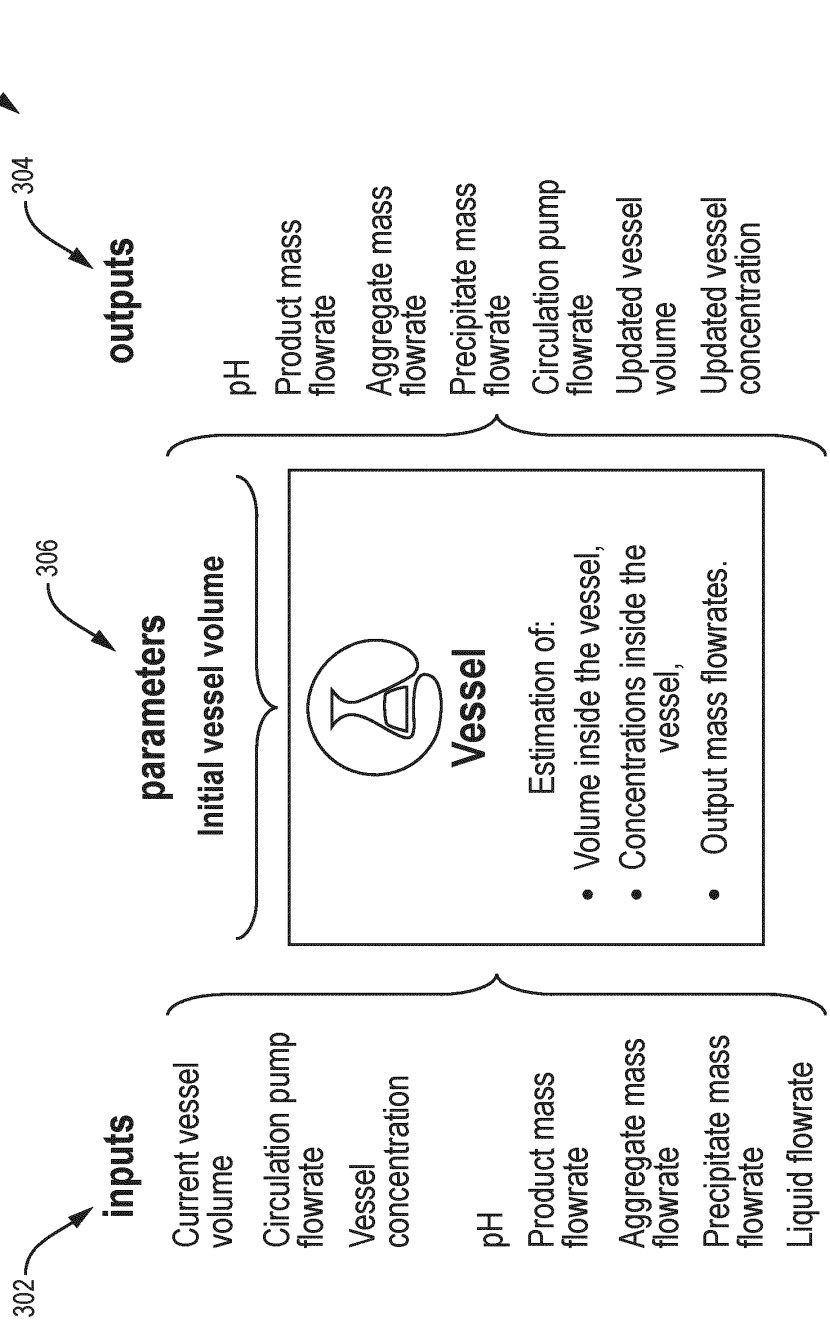
300
302
304
306
inputs
Current vessel volume
Circulation pump flowrate
Vessel concentration
pH
Product mass flowrate
Aggregate mass flowrate
Precipitate mass flowrate
Liquid flowrate
parameters
Initial vessel volume
Vessel
Estimation of:
• Volume inside the vessel,
• Concentrations inside the vessel,
• Output mass flowrates.
outputs
pH
Product mass flowrate
Aggregate mass flowrate
Precipitate mass flowrate
Circulation pump flowrate
Updated vessel volume
Updated vessel concentration

FIG. 3

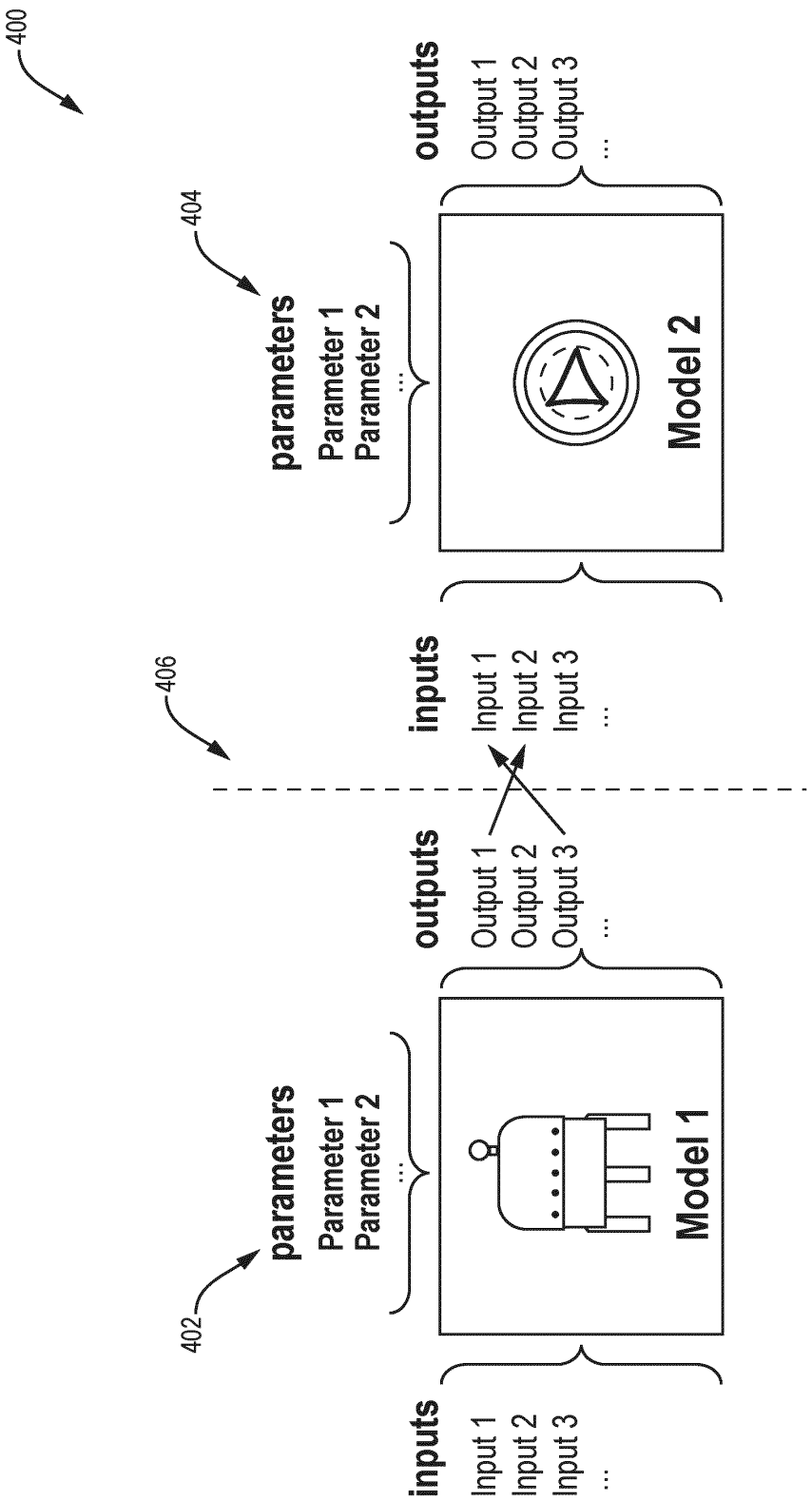
400
402
parameters
Parameter 1
Parameter 2
...
Model 1
inputs
Input 1
Input 2
Input 3
...
outputs
Output 1
Output 2
Output 3
...
406
404
parameters
Parameter 1
Parameter 2
...
Model 2
inputs
Input 1
Input 2
Input 3
...
outputs
Output 1
Output 2
Output 3
...

FIG. 4

```
"components":[
        {
          "filename": "model1.fmu",
          "name": "model1",
          "variables":
          [
              "input 1",
              "input 2",
              "output 1",
              ...
          ]
        },
        ...
    ]
"connections":[
        "model1",
        "output 1",
        "model2",
        "input 2",
    ],
```

FIG. 5

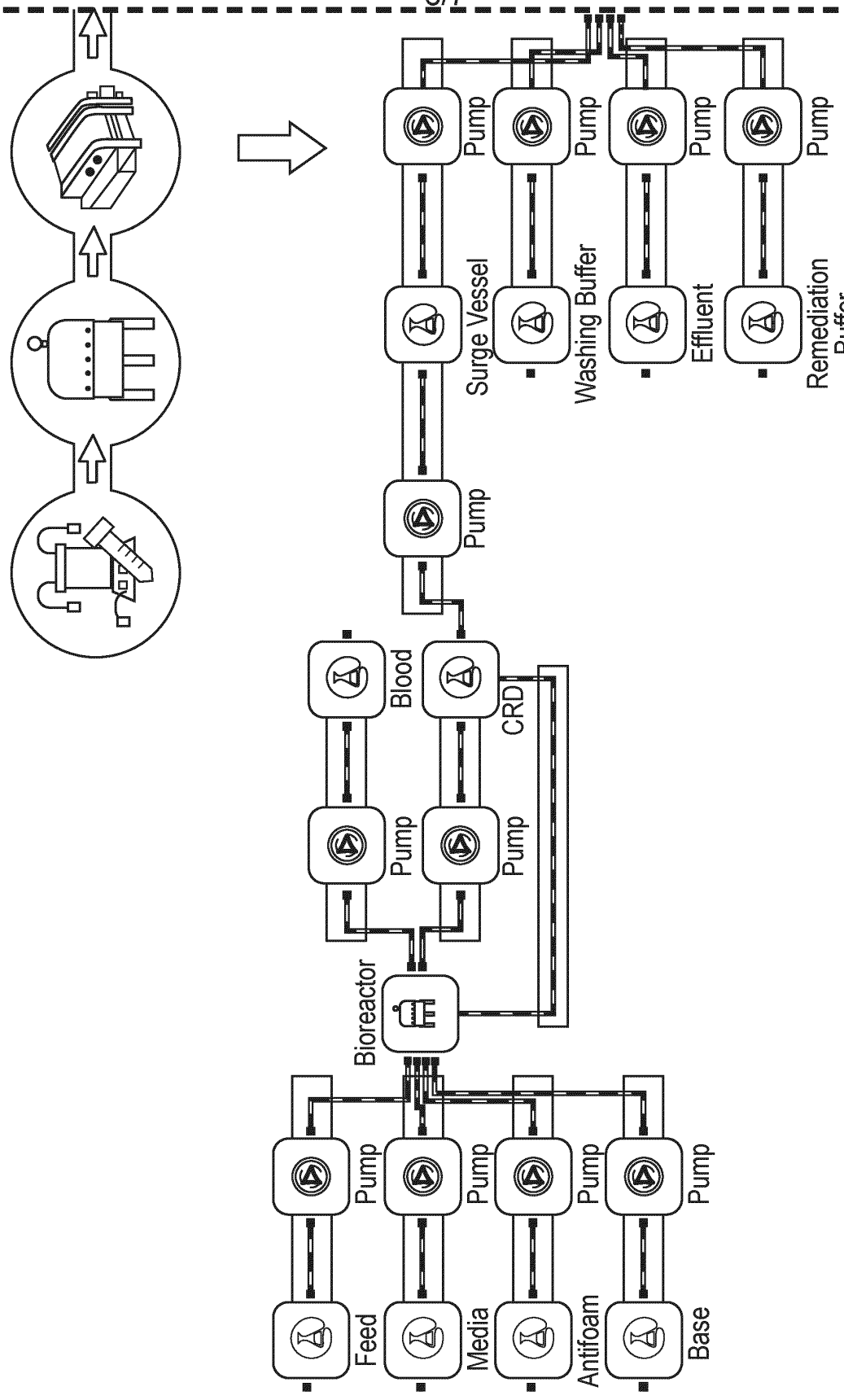
Pump
Surge Vessel
Pump
Washing Buffer
Pump
Effluent
Pump
Remediation Buffer
Pump
Blood
CRD
Pump
Pump
Bioreactor
Pump
Feed
Pump
Media
Pump
Antifoam
Pump
Base

FIG. 6A

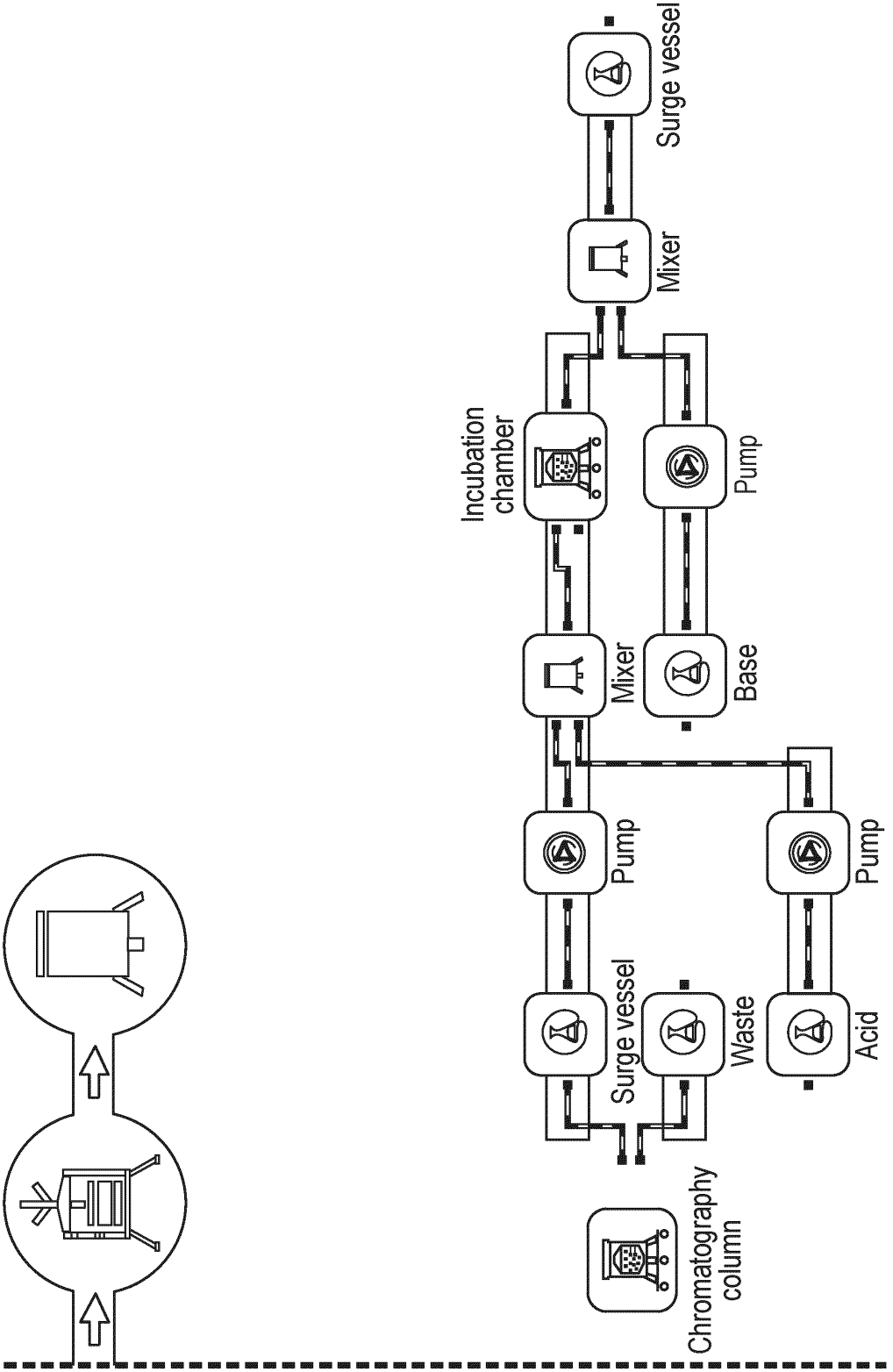
Surge vessel
Mixer
Incubation chamber
Pump
Mixer
Base
Pump
Pump
Surge vessel
Waste
Acid
Chromatography column

FIG. 6B