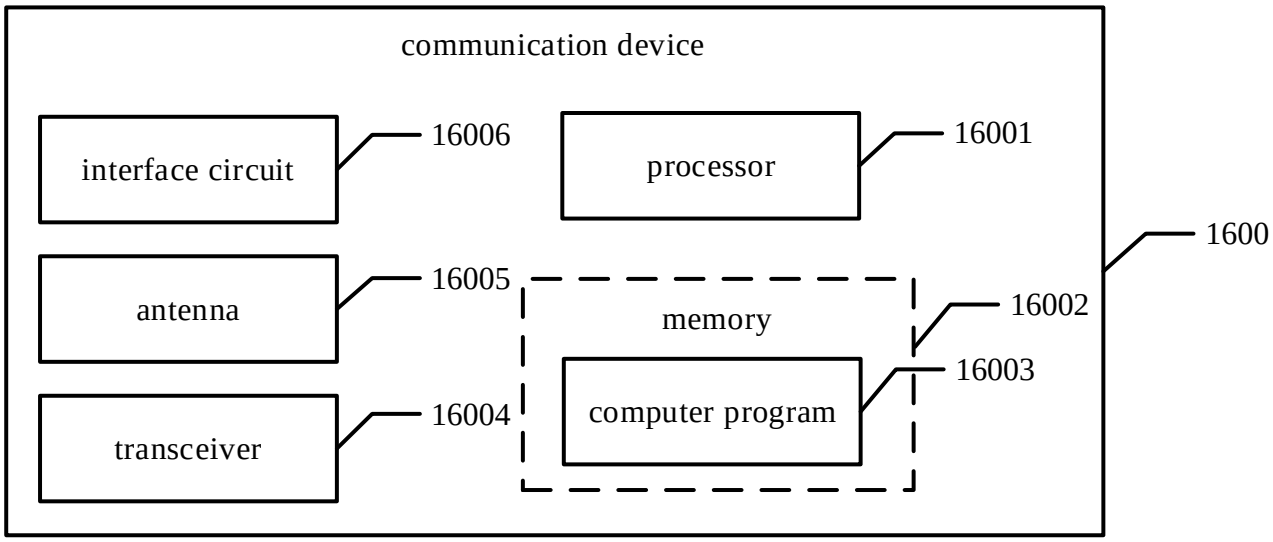
communication device
interface circuit
16006
processor
16001
1600
antenna
16005
memory
16002
16003
transceiver
16004
computer program

FIG. 16