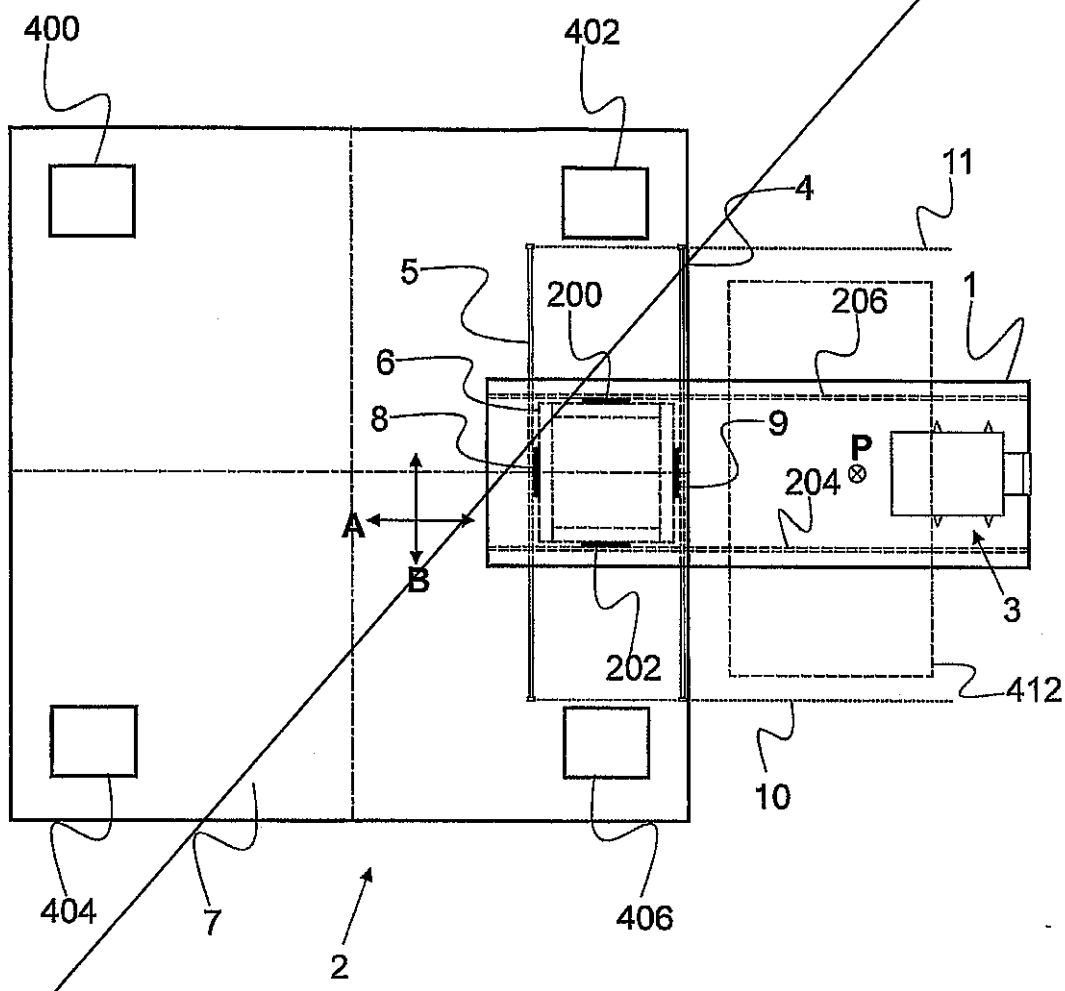

FIG 1

~~10/22~~
1/21

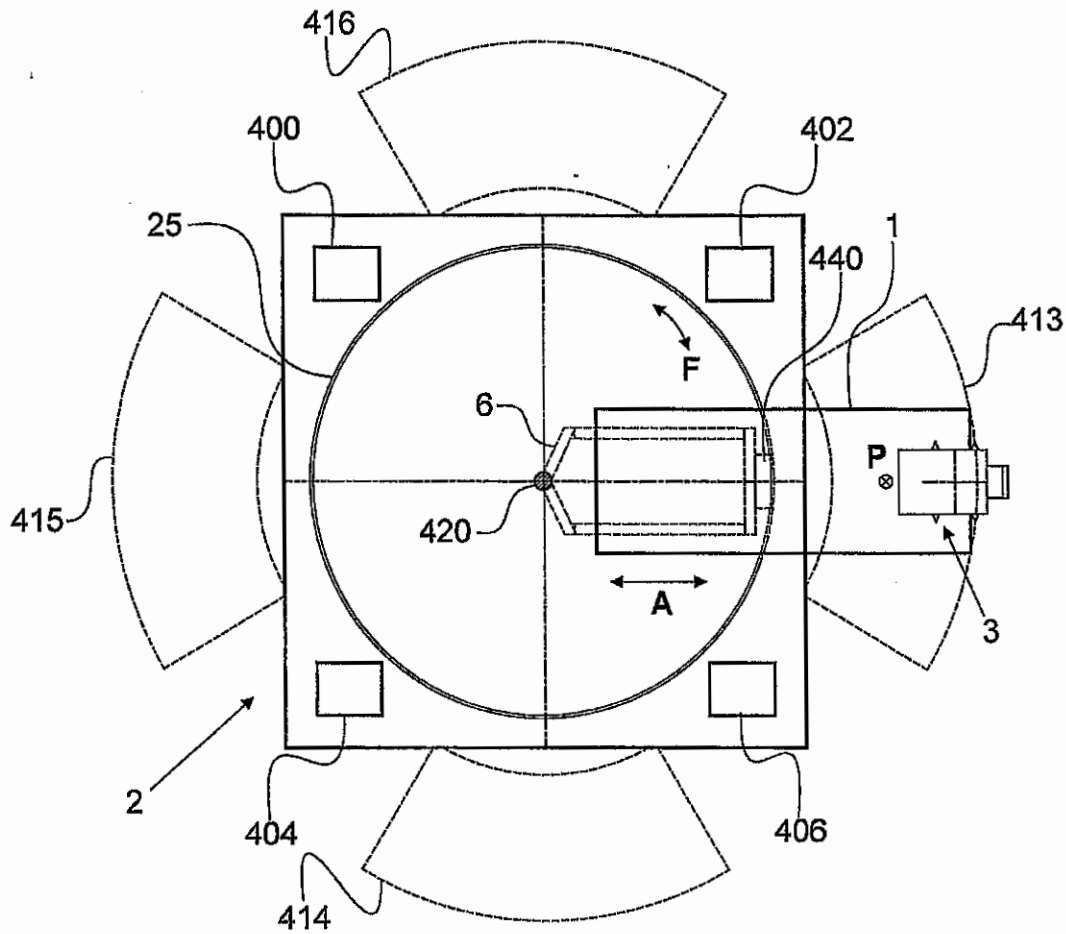

FIG ~~10~~

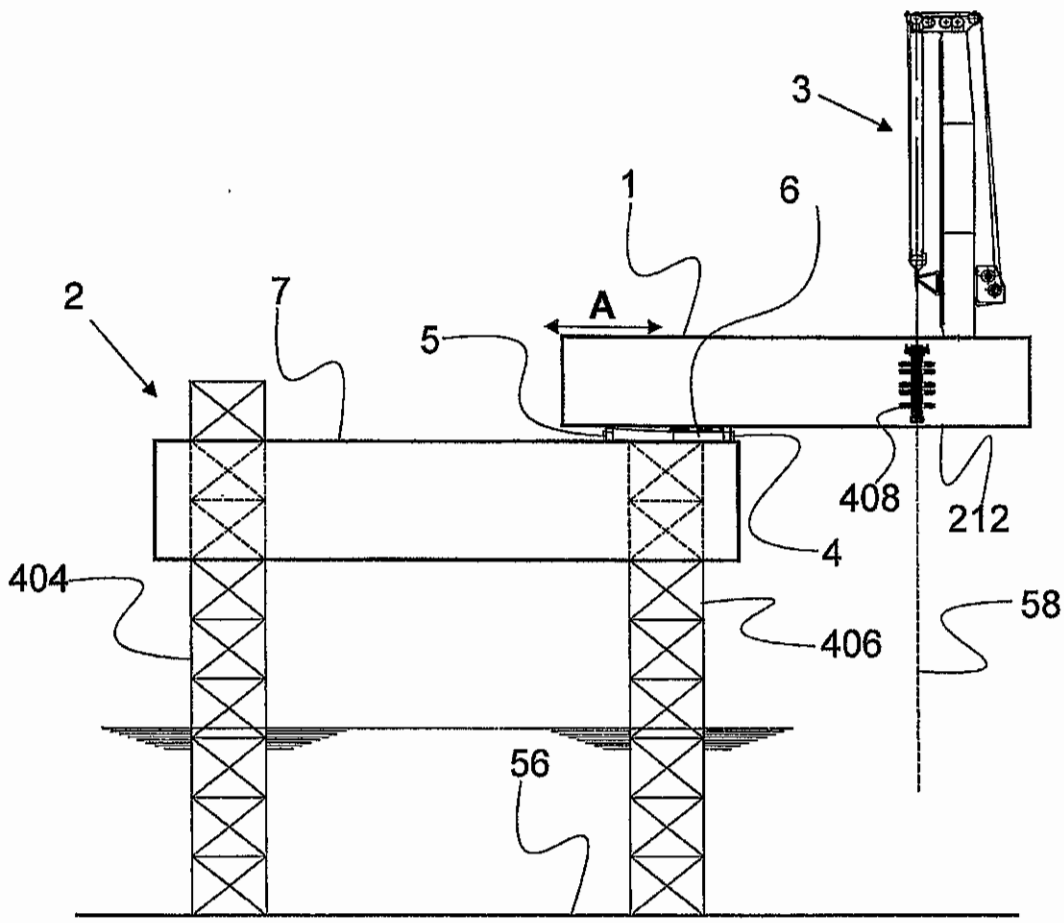

FIG 2

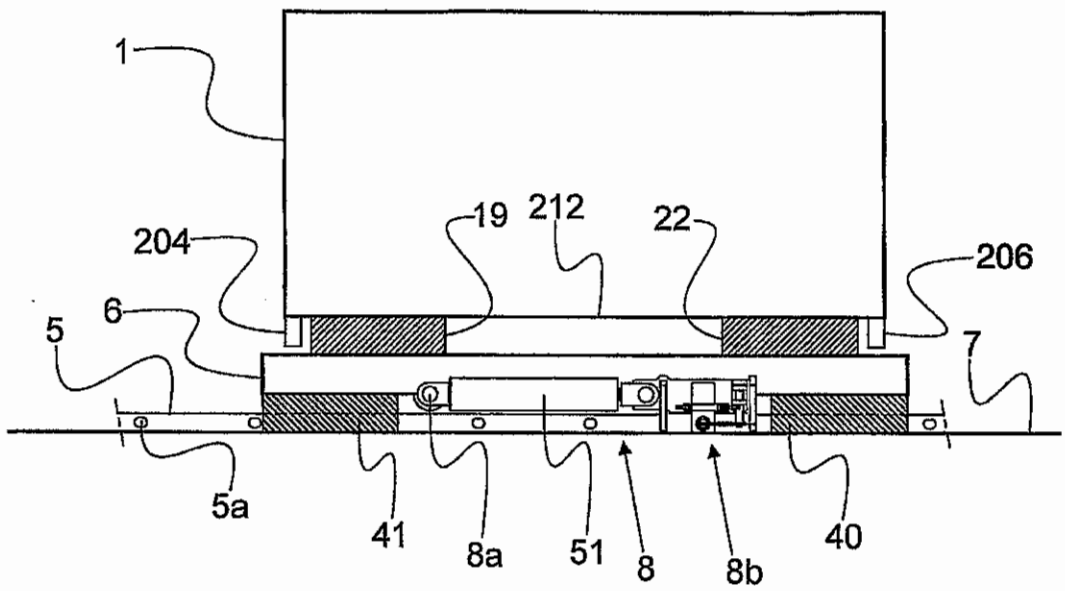

FIG 3

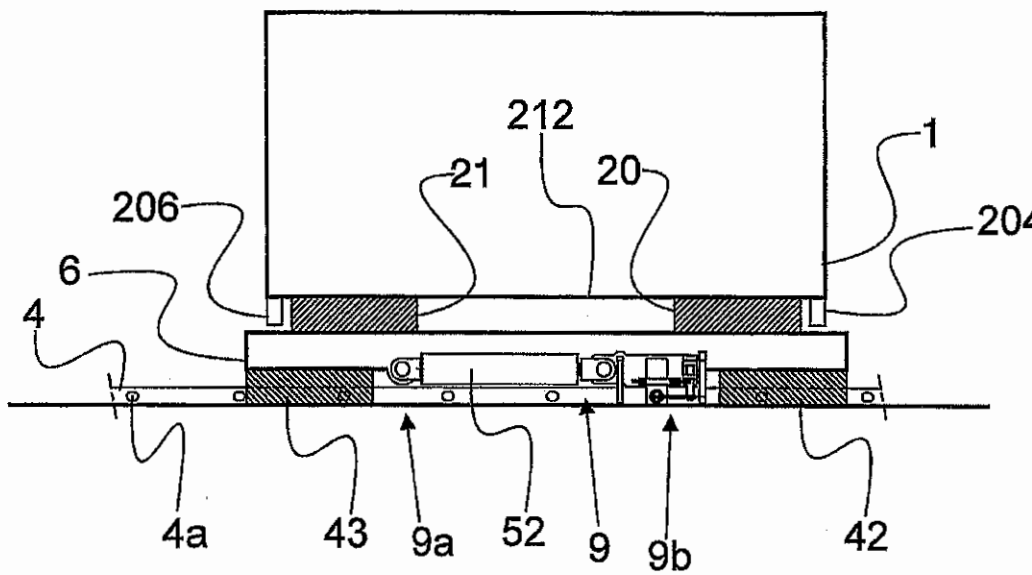

FIG 4

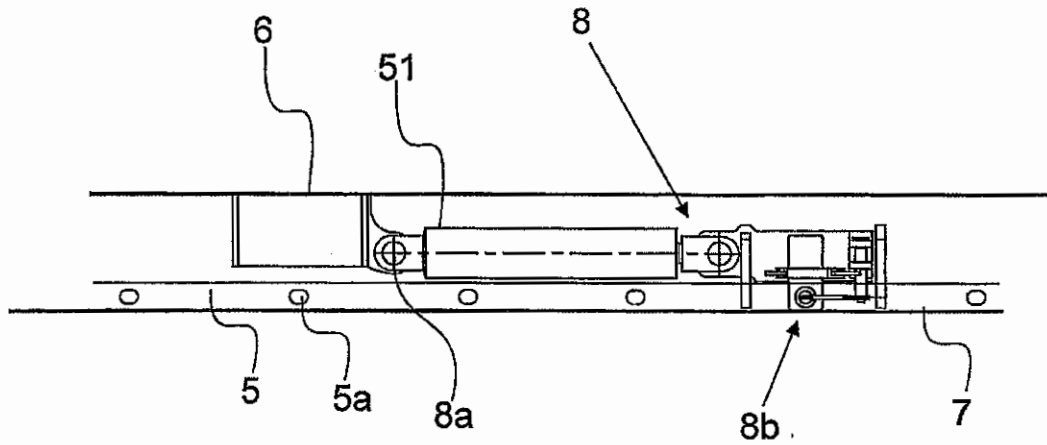

FIG 5

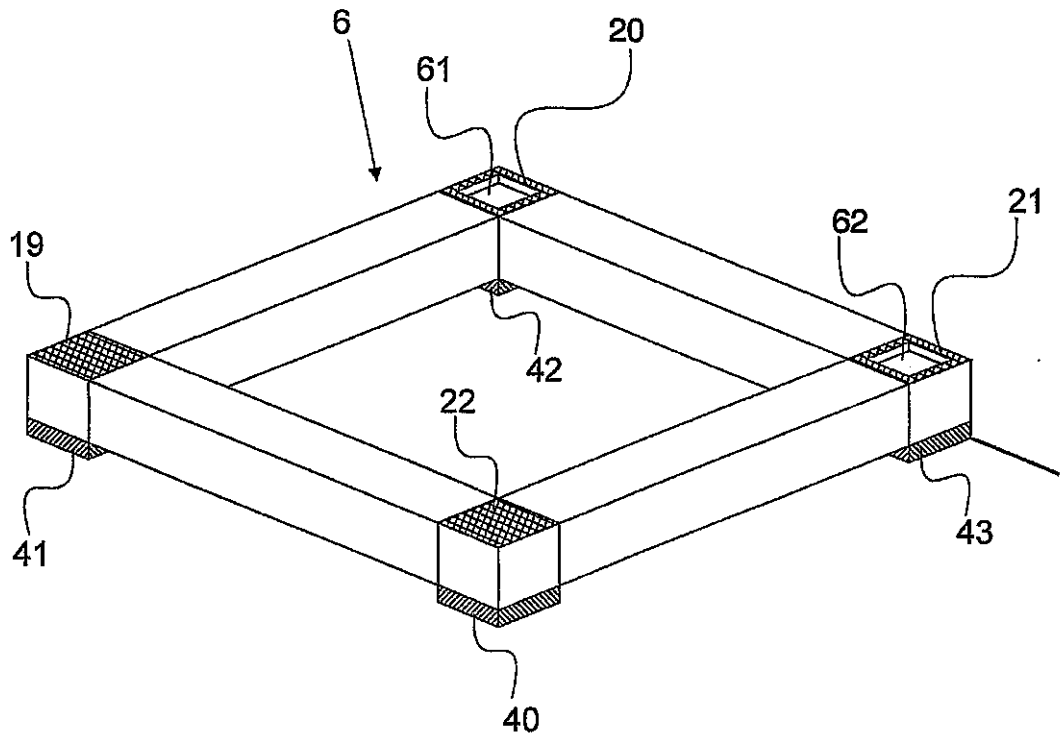

FIG 6

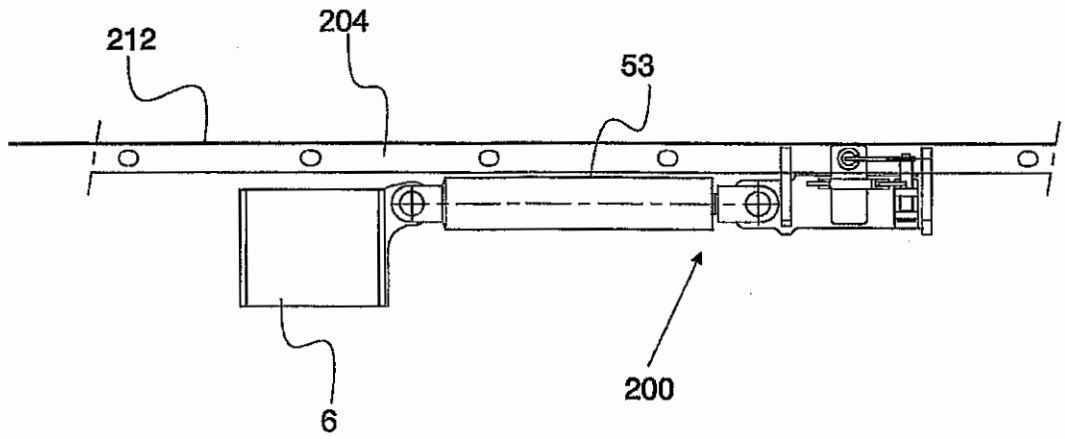

FIG 7

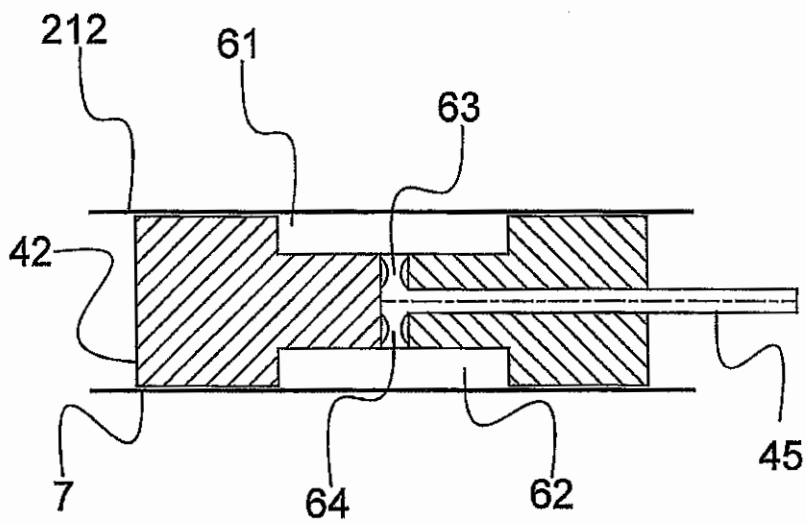

FIG 8

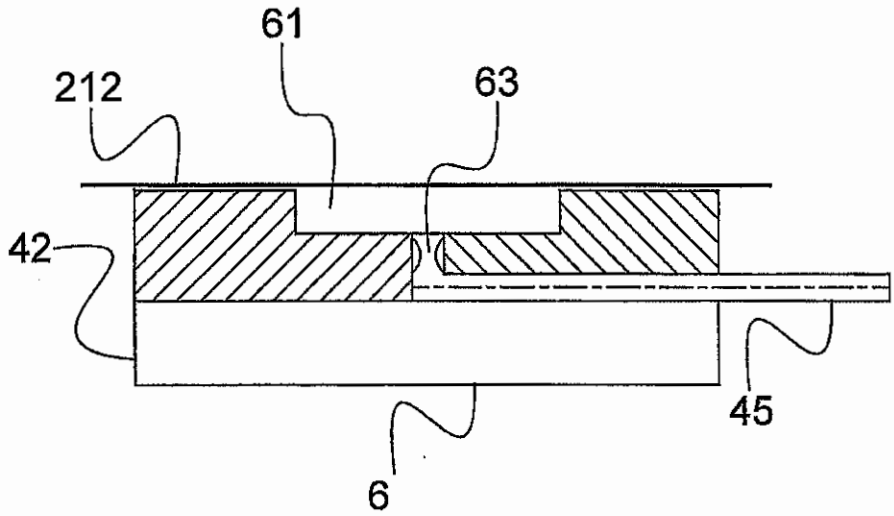

FIG 9

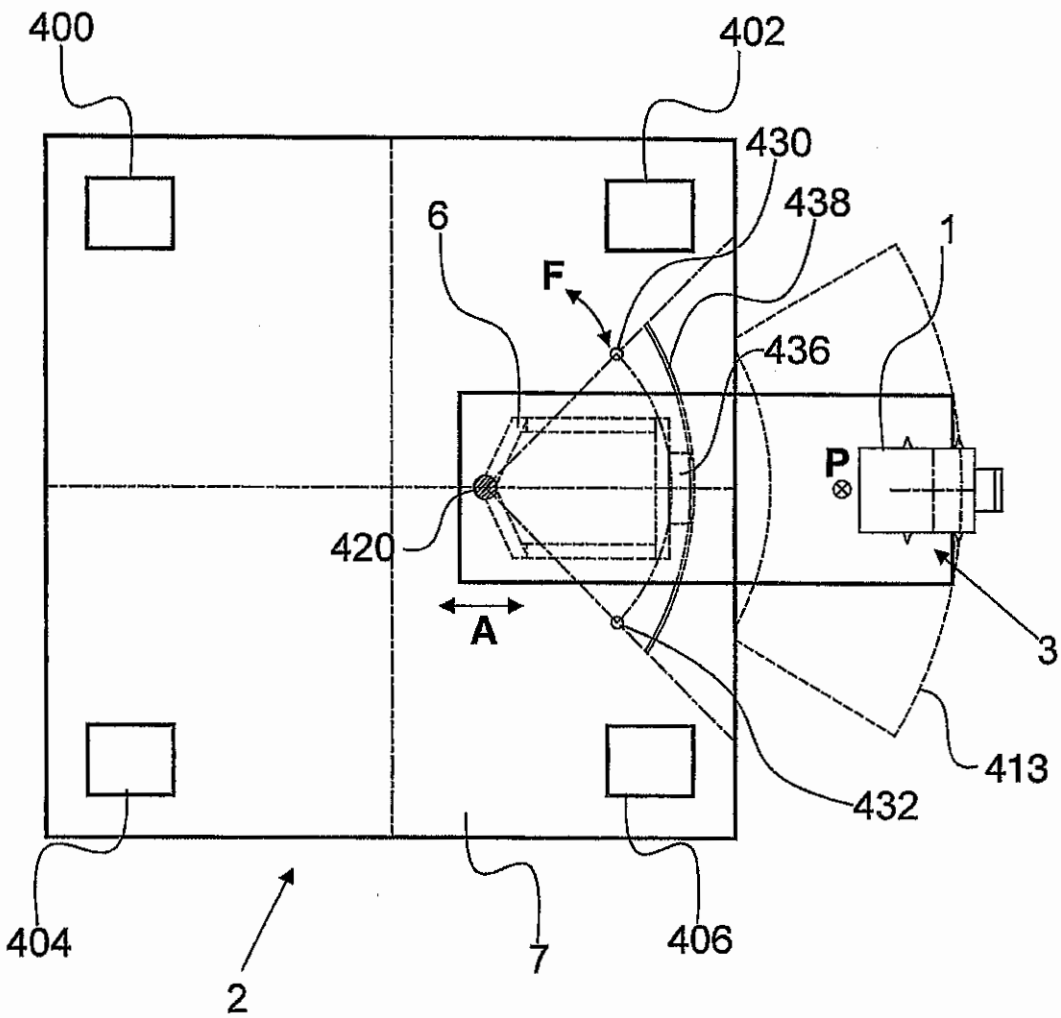

FIG ~~11~~ 10

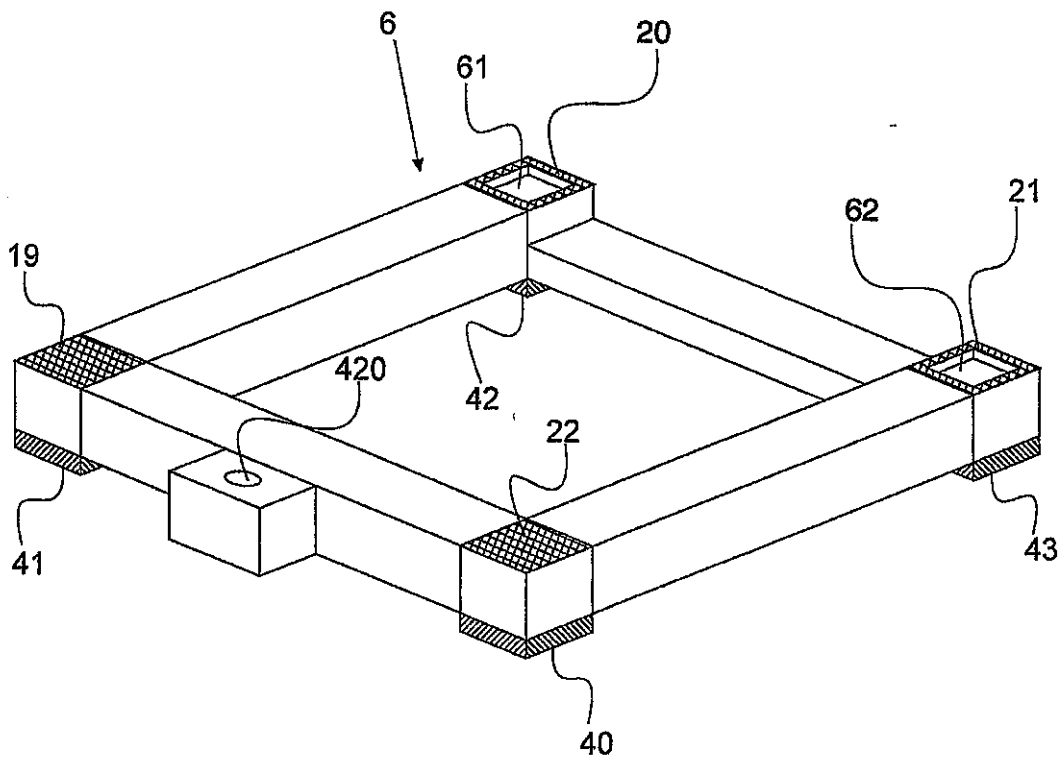

FIG ~~12~~ 11

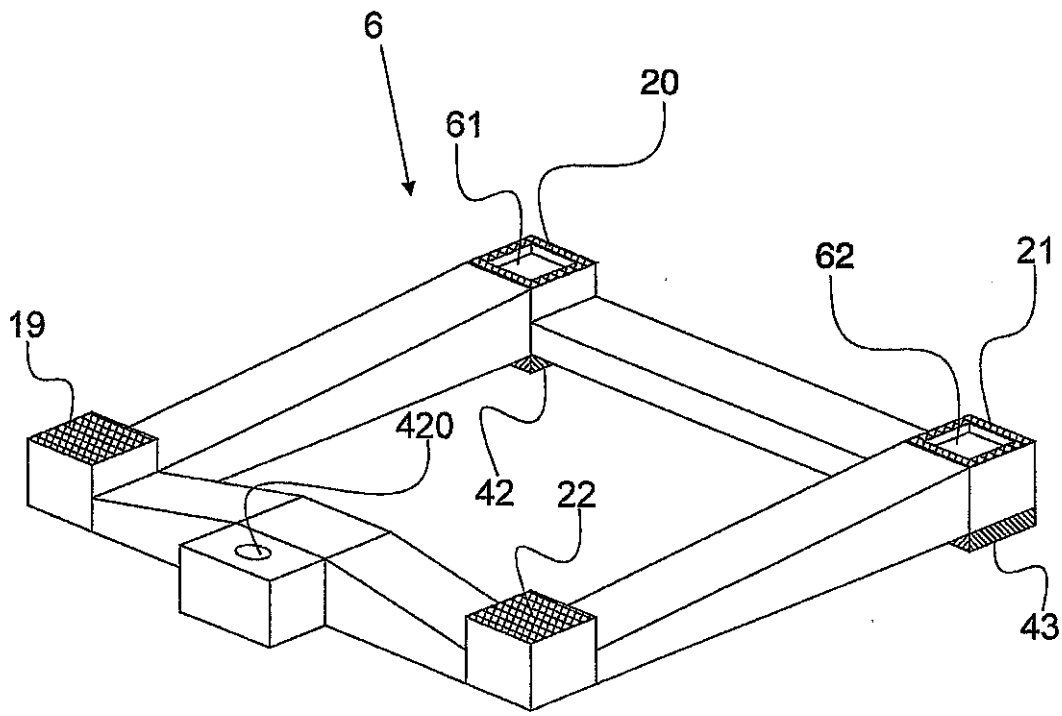

FIG ~~13~~ 12

~~14/22~~ 13/21

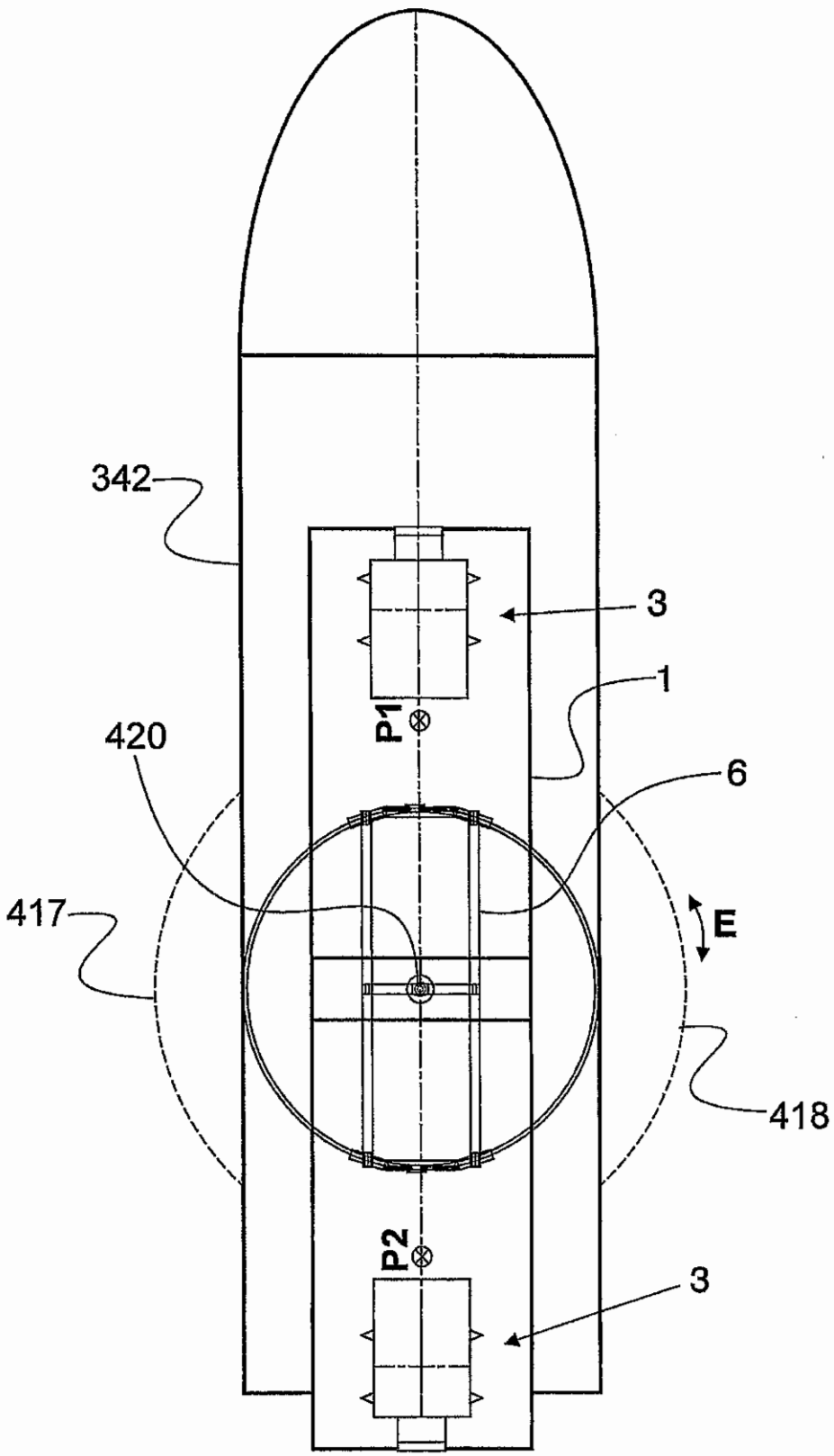

FIG ~~14~~ 13

~~15/22~~ 14/21

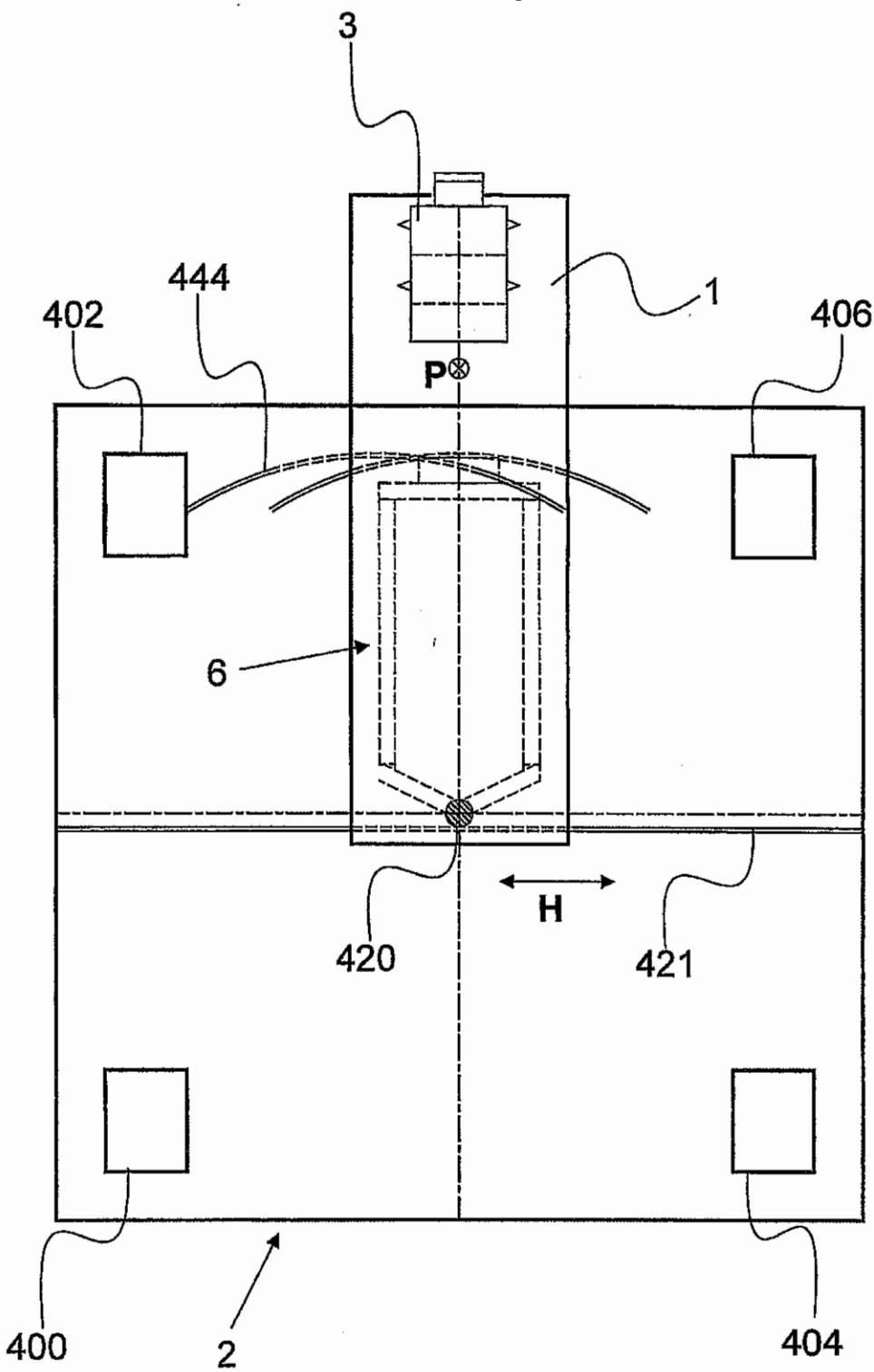

FIG ~~15~~ 14

~~16/22~~ 15/21

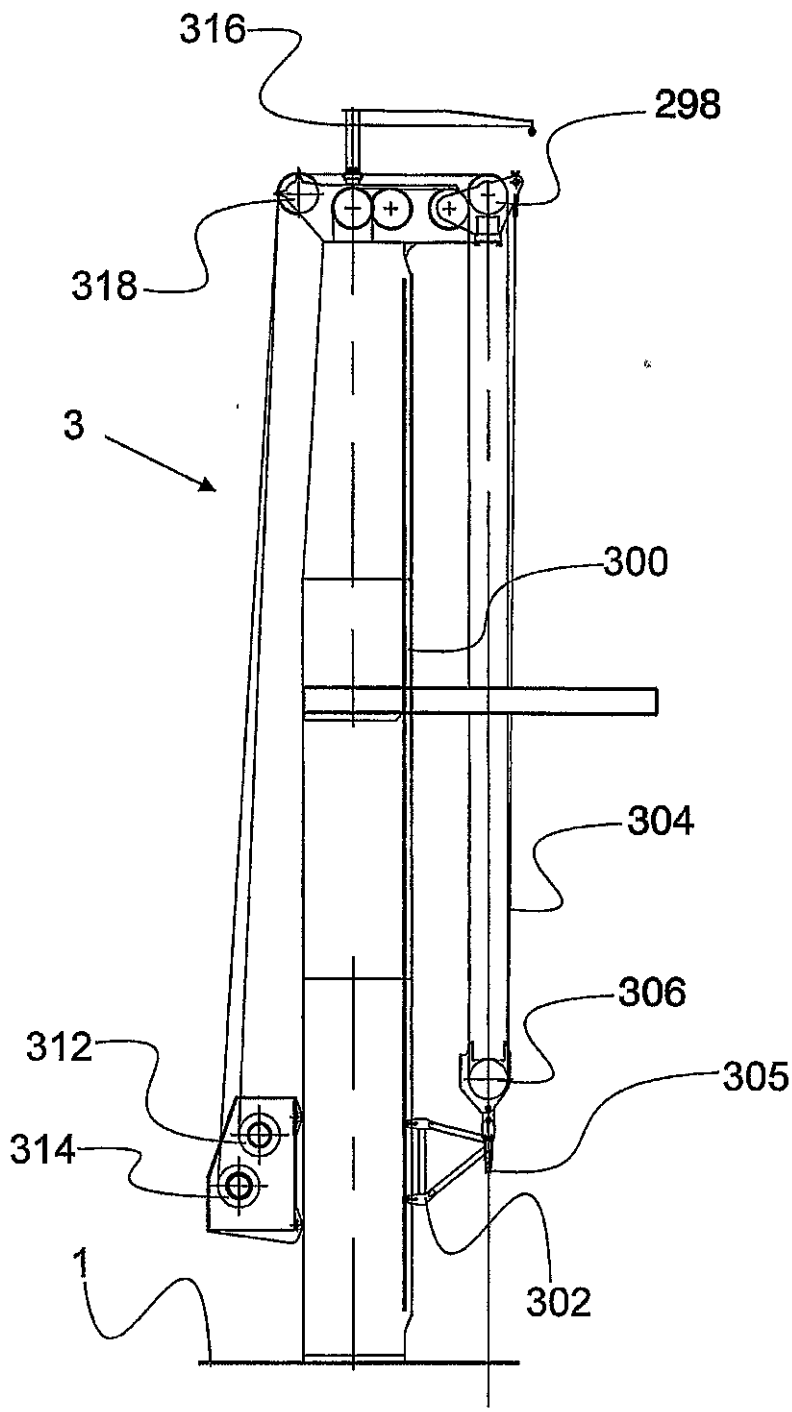

FIG ~~16~~ 15

~~17/22~~ 16/21

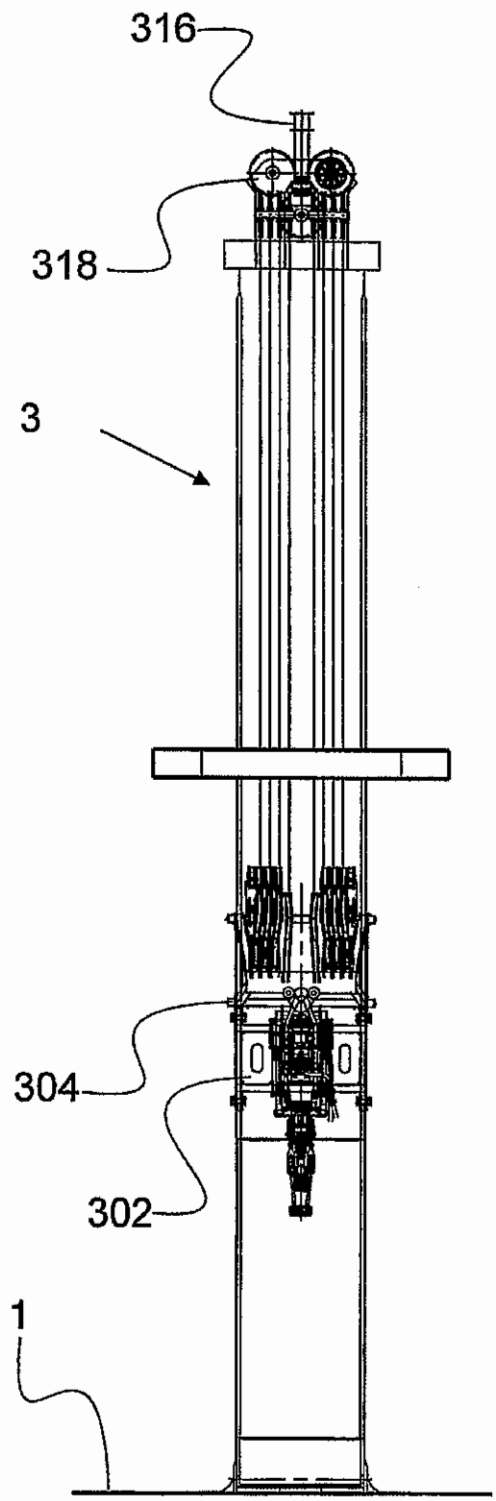

FIG ~~17~~ 16

~~18/22~~ 18/22

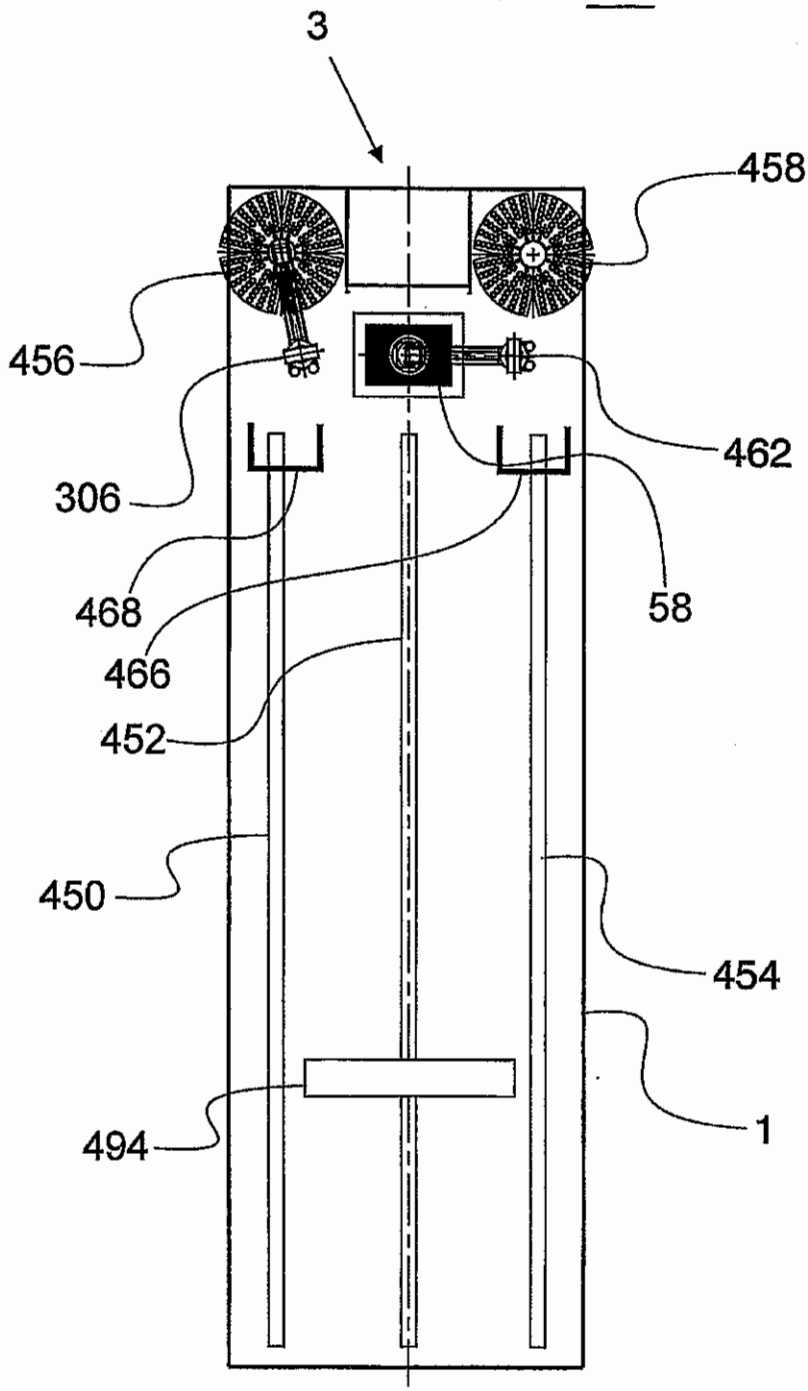

FIG ~~18~~ 18

~~19/22~~ 18/21

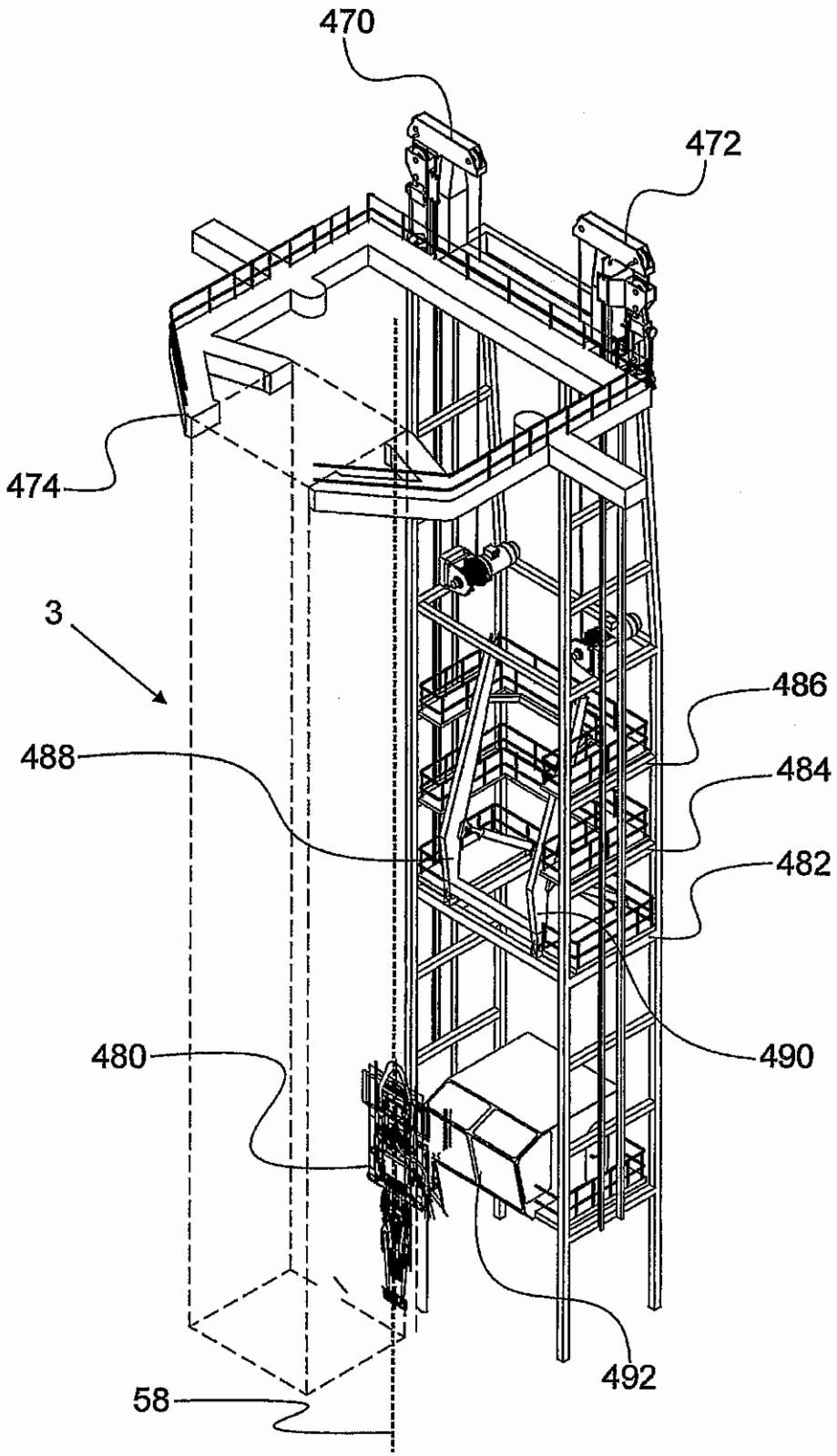

FIG ~~19~~ 18

~~20/22~~ 19|21

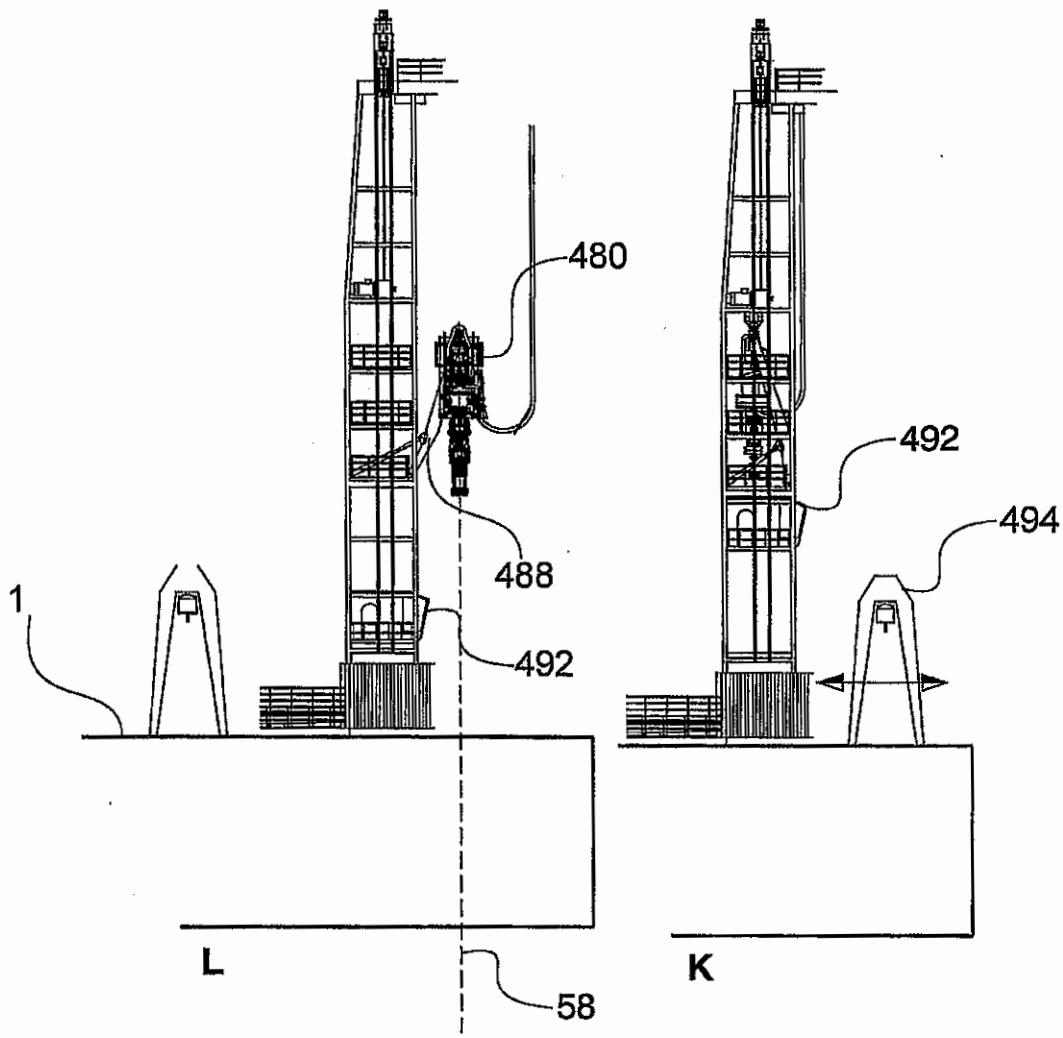

FIG ~~20~~ 19

~~21/22~~ ২০/২১

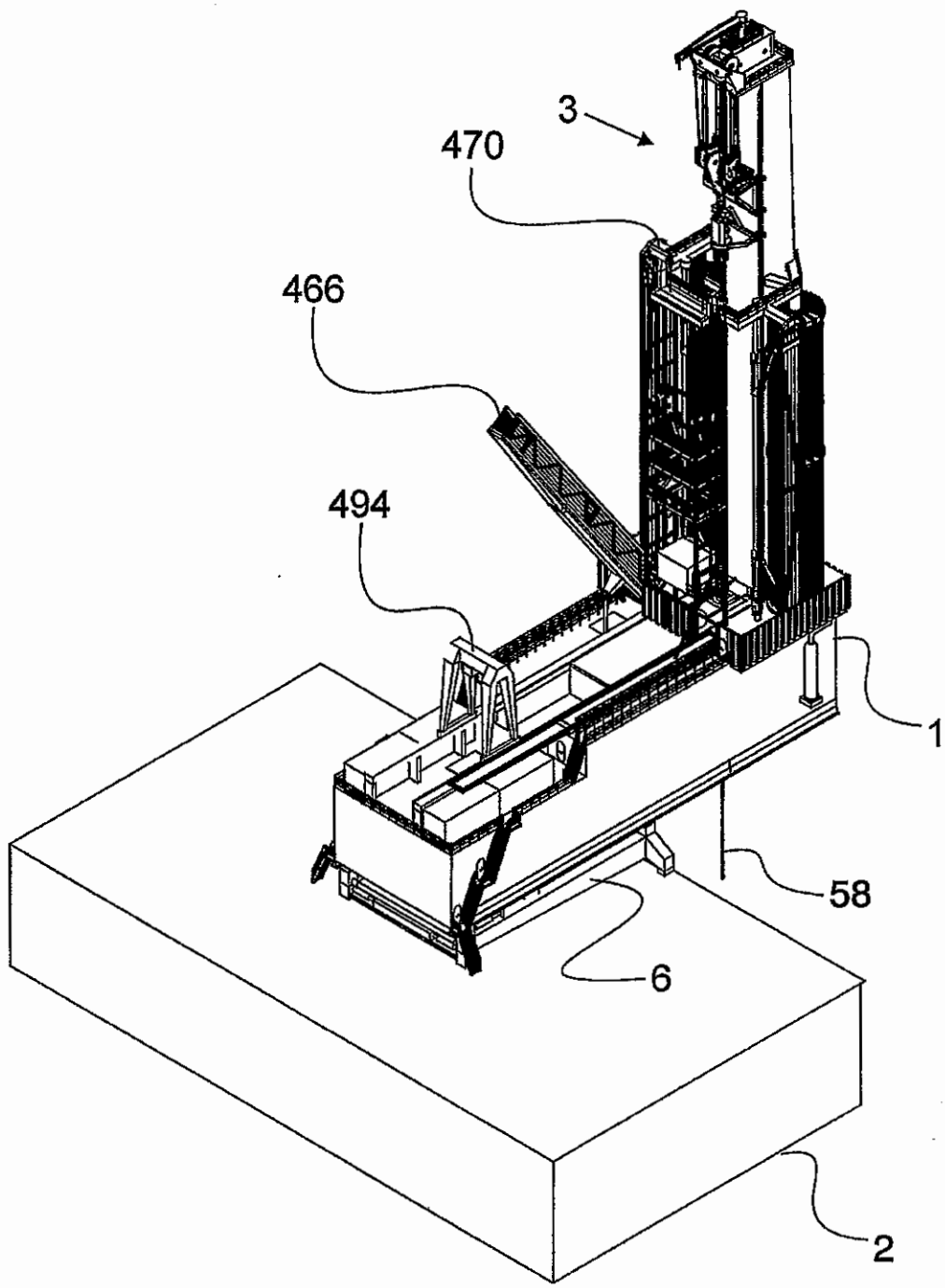

FIG ~~21~~ ২০

~~22/22~~ 21/21

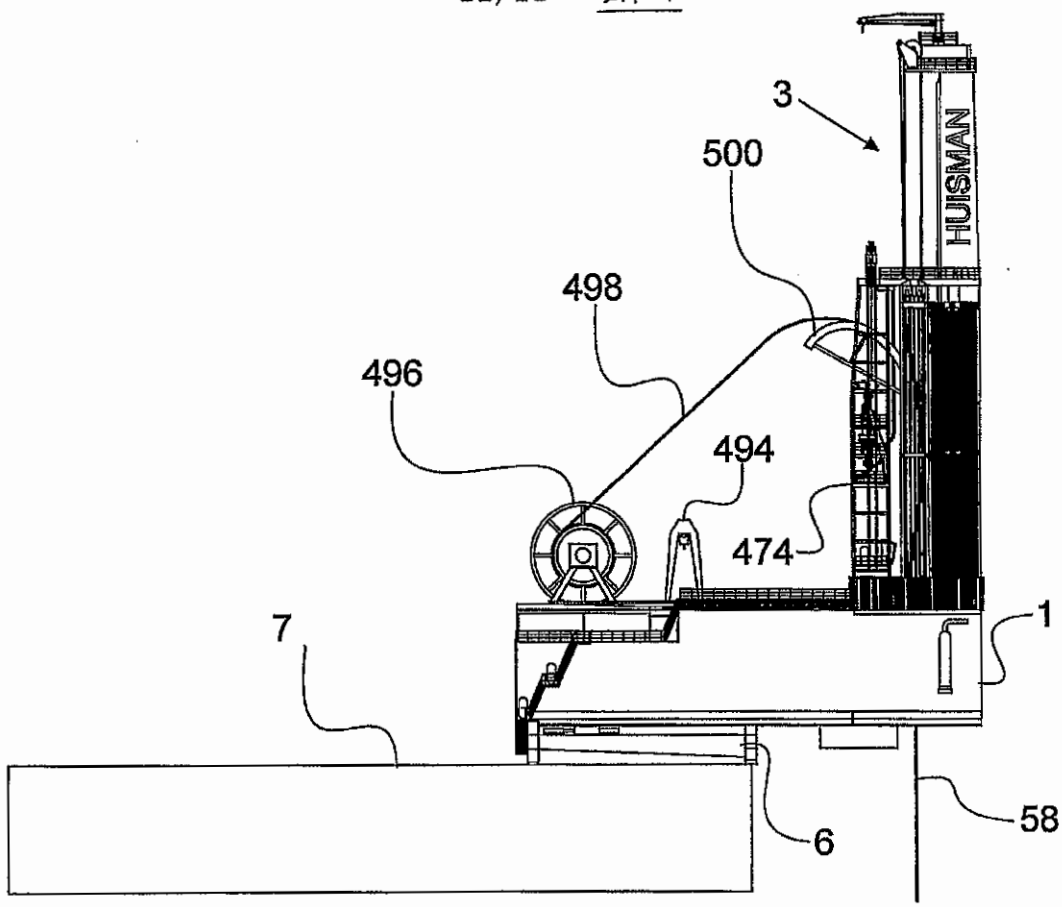

FIG ~~22~~ 21