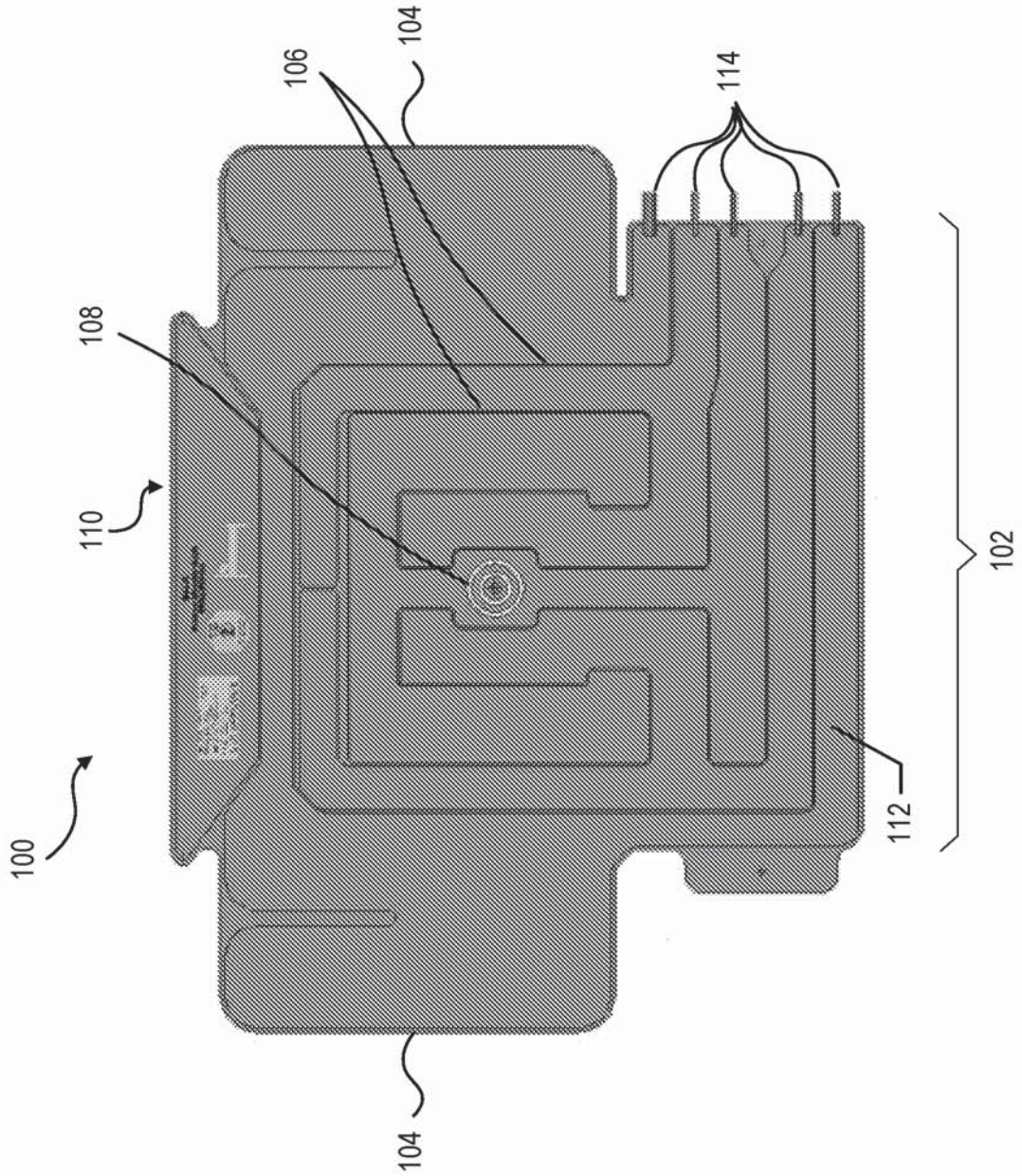

FIGURE 1A

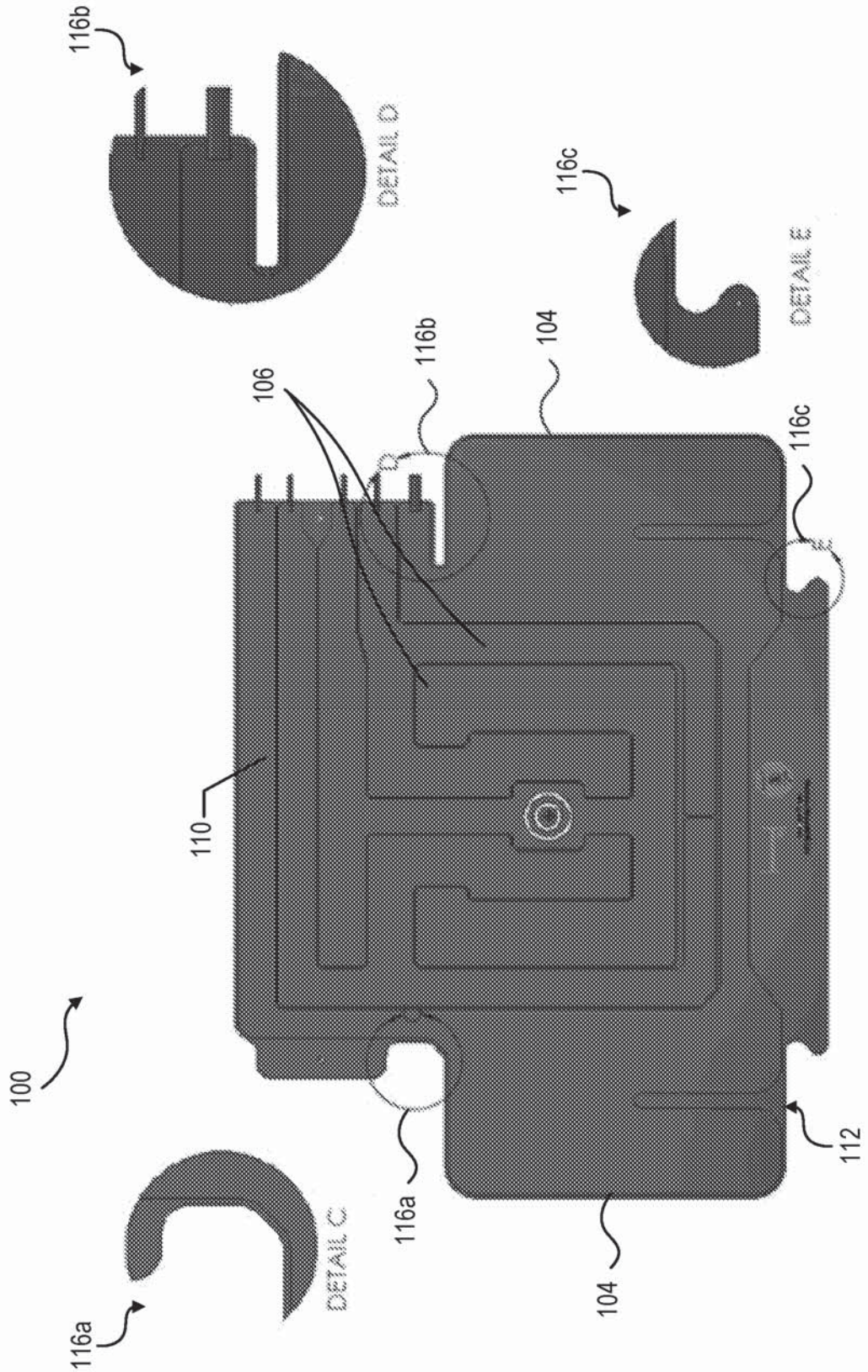
116b
DETAIL D
116c
DETAIL E
106
116b
104
116c
110
100
DETAIL C
116a
116a
104
112

FIGURE 1B

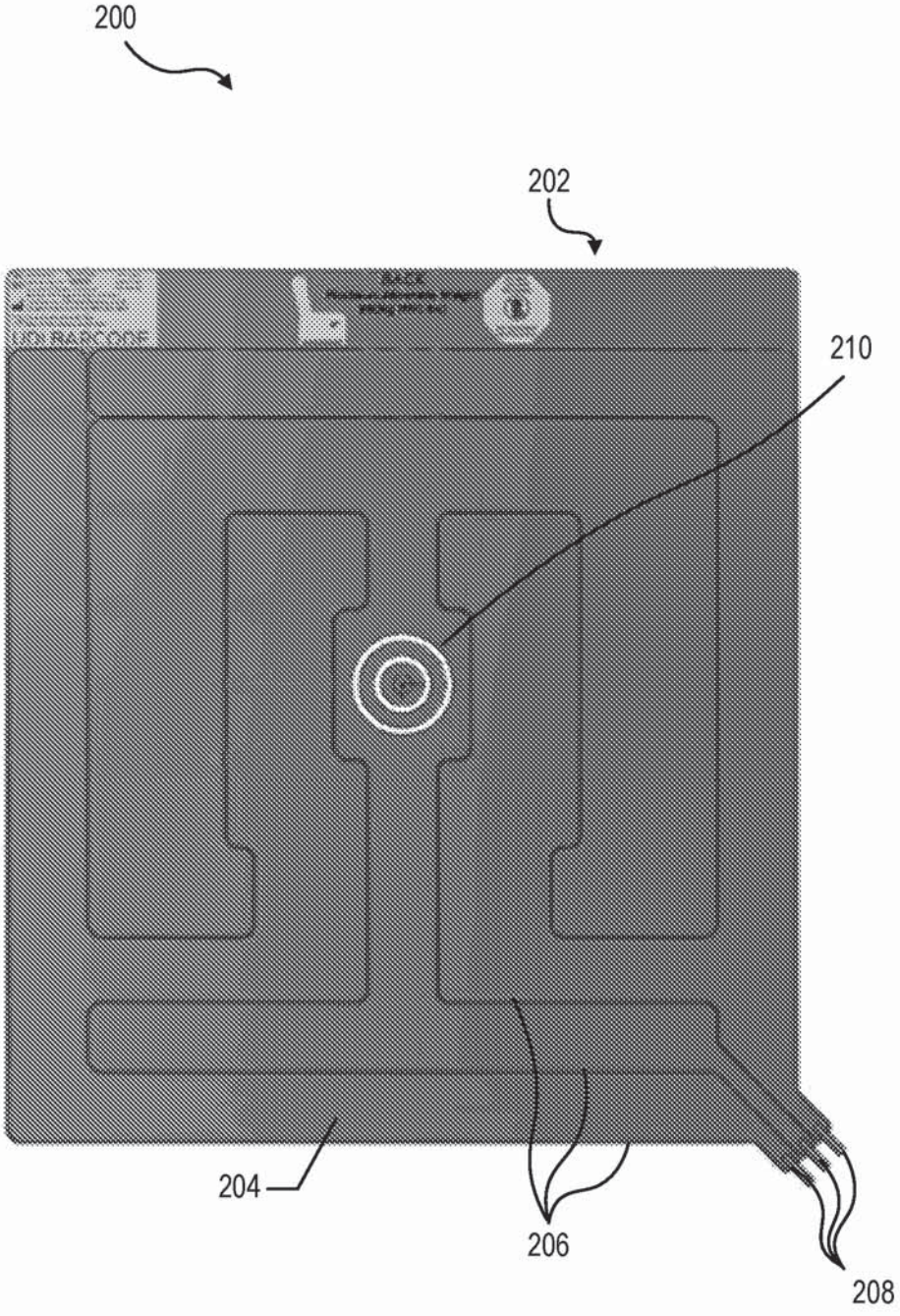

FIGURE 2A

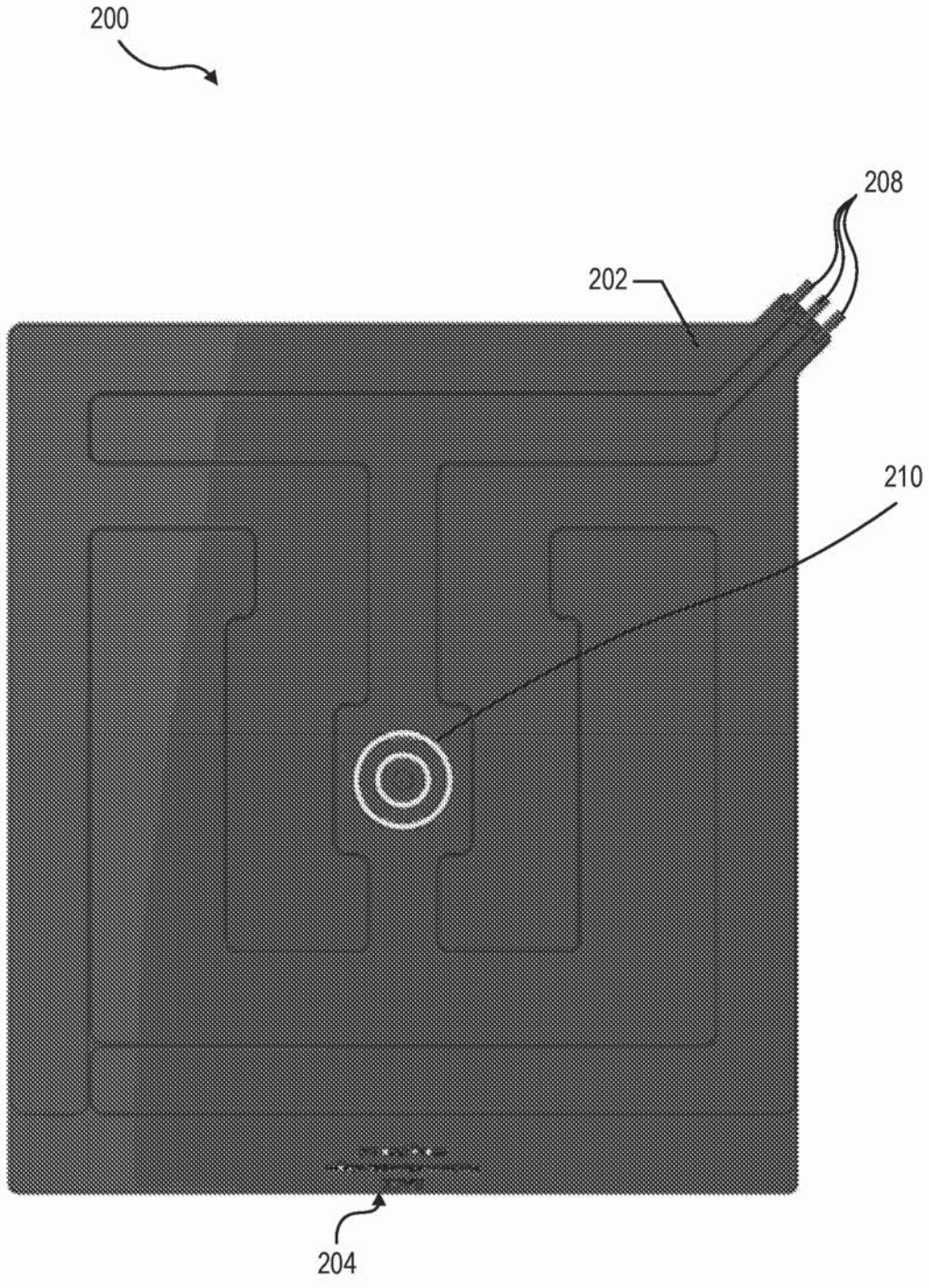

FIGURE 2B

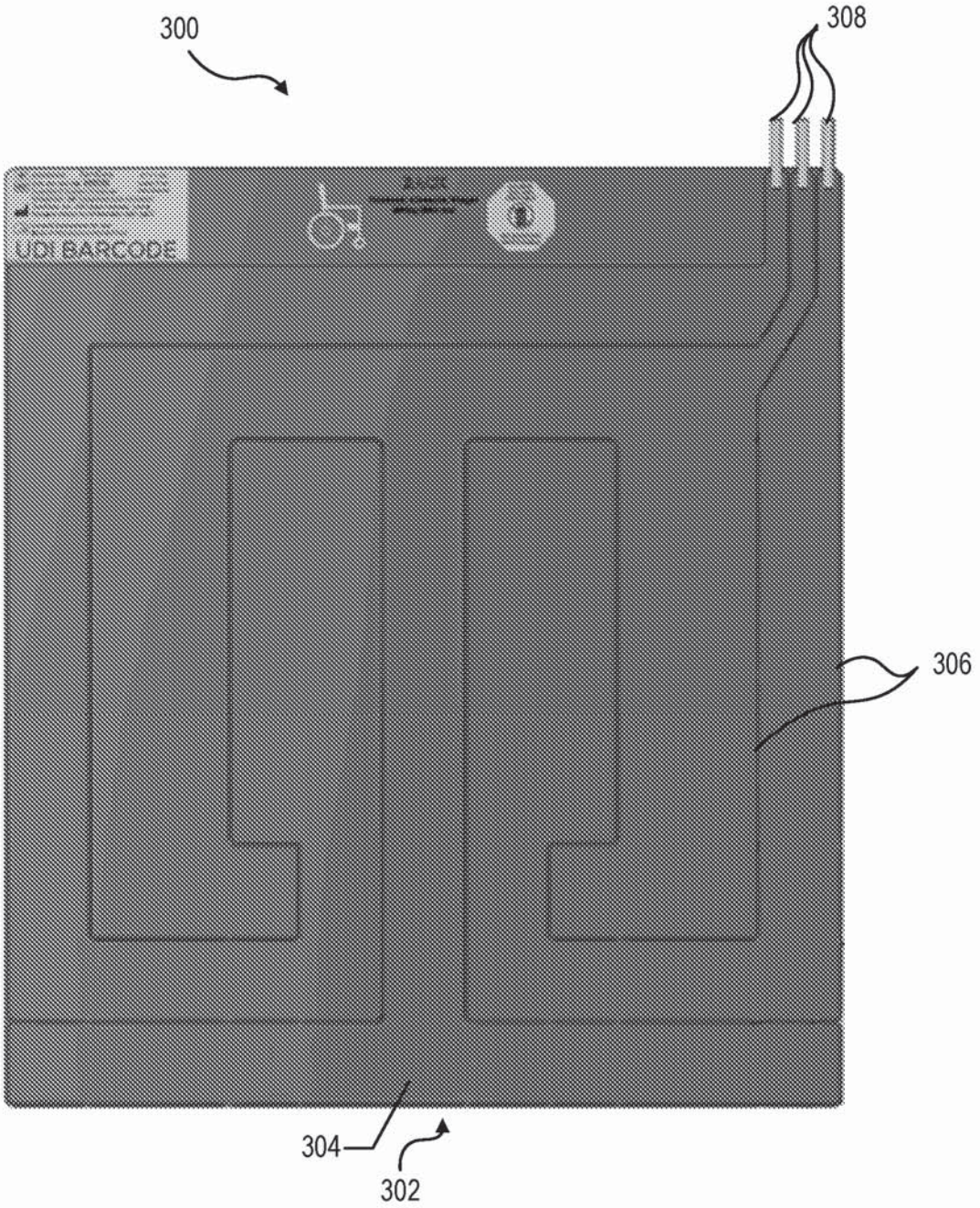

FIGURE 3

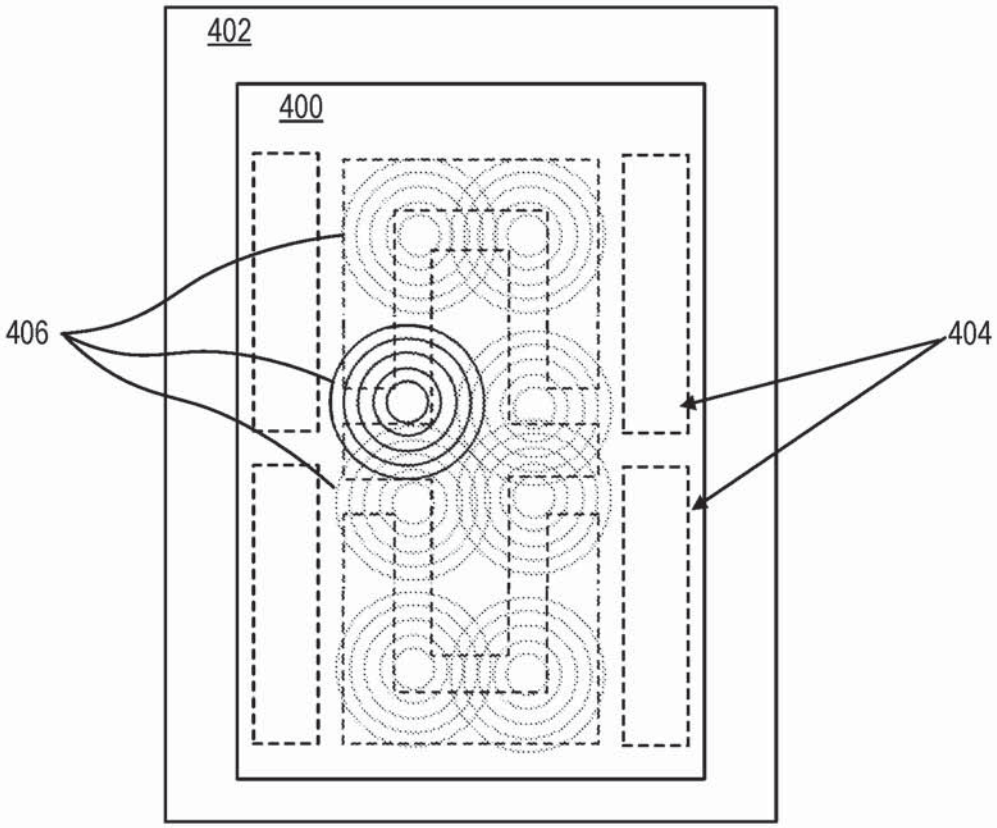

FIGURE 4

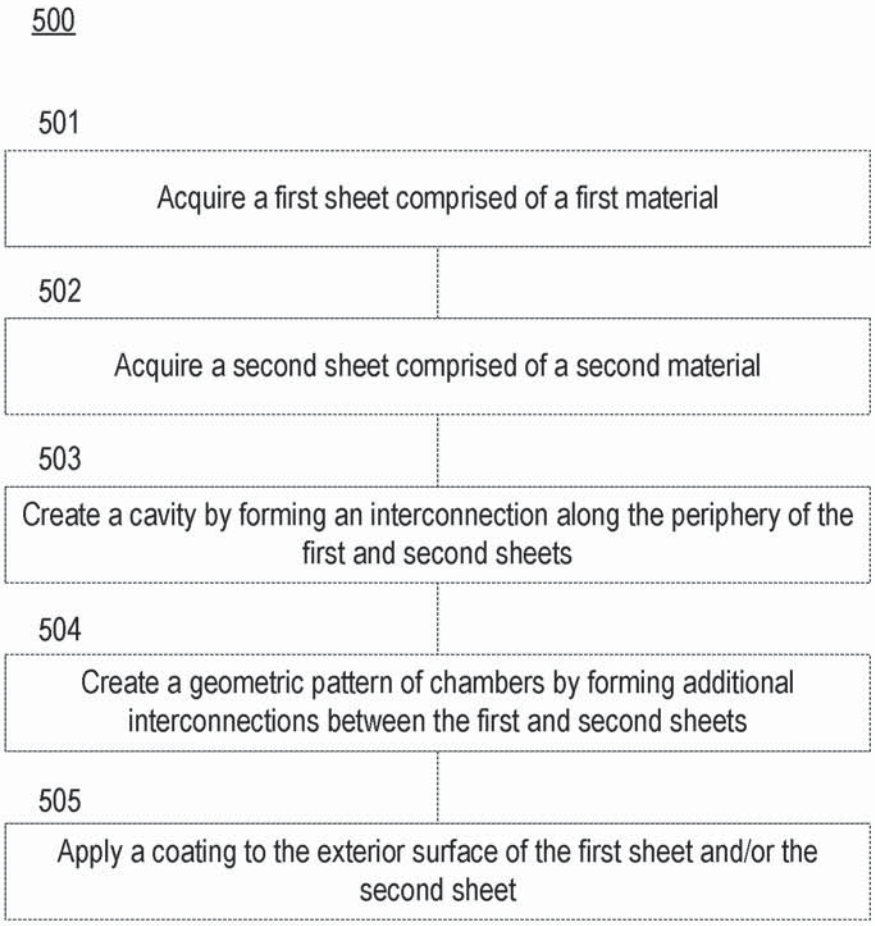
500
501
Acquire a first sheet comprised of a first material
502
Acquire a second sheet comprised of a second material
503
Create a cavity by forming an interconnection along the periphery of the first and second sheets
504
Create a geometric pattern of chambers by forming additional interconnections between the first and second sheets
505
Apply a coating to the exterior surface of the first sheet and/or the second sheet

FIGURE 5

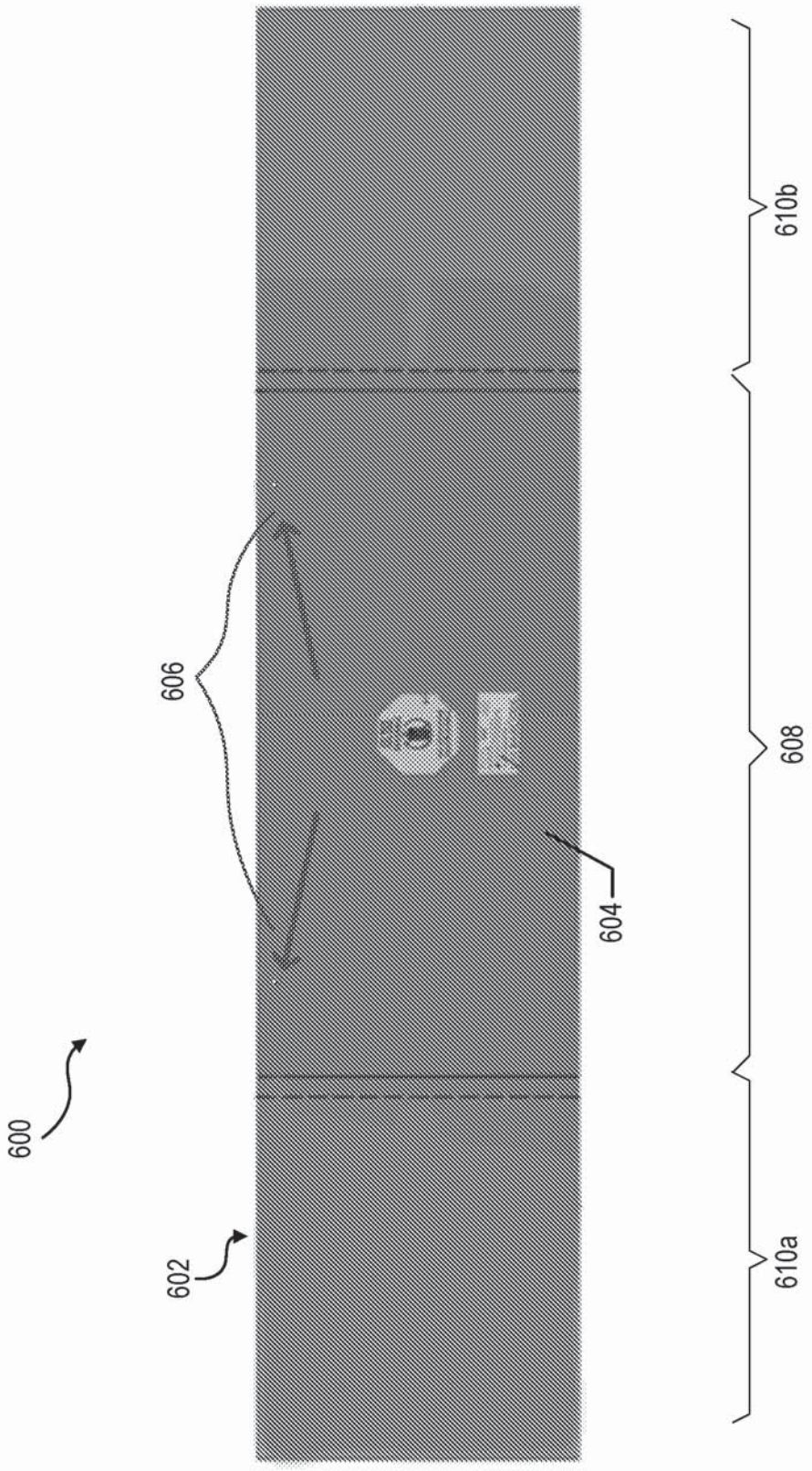

FIGURE 6

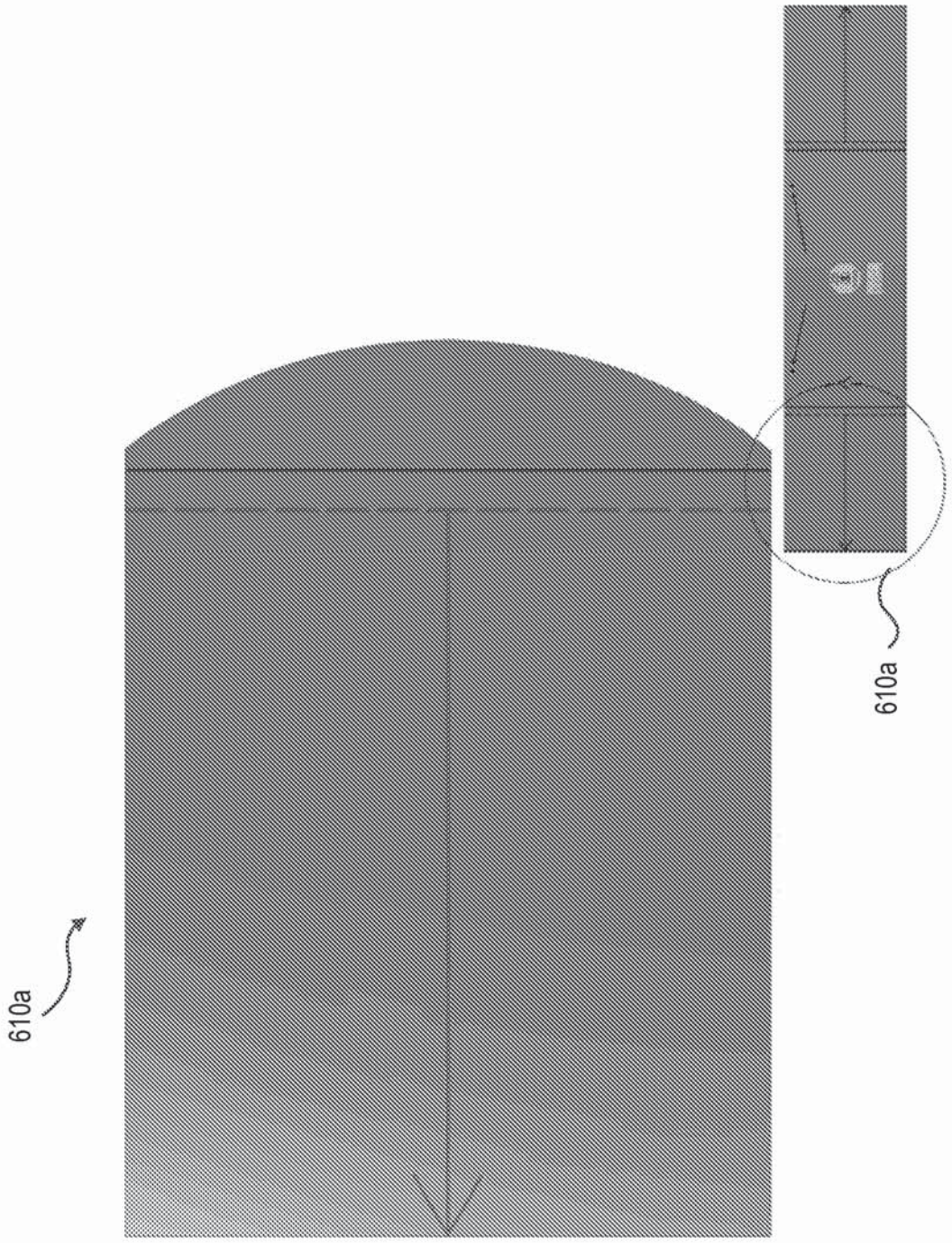

FIGURE 7A

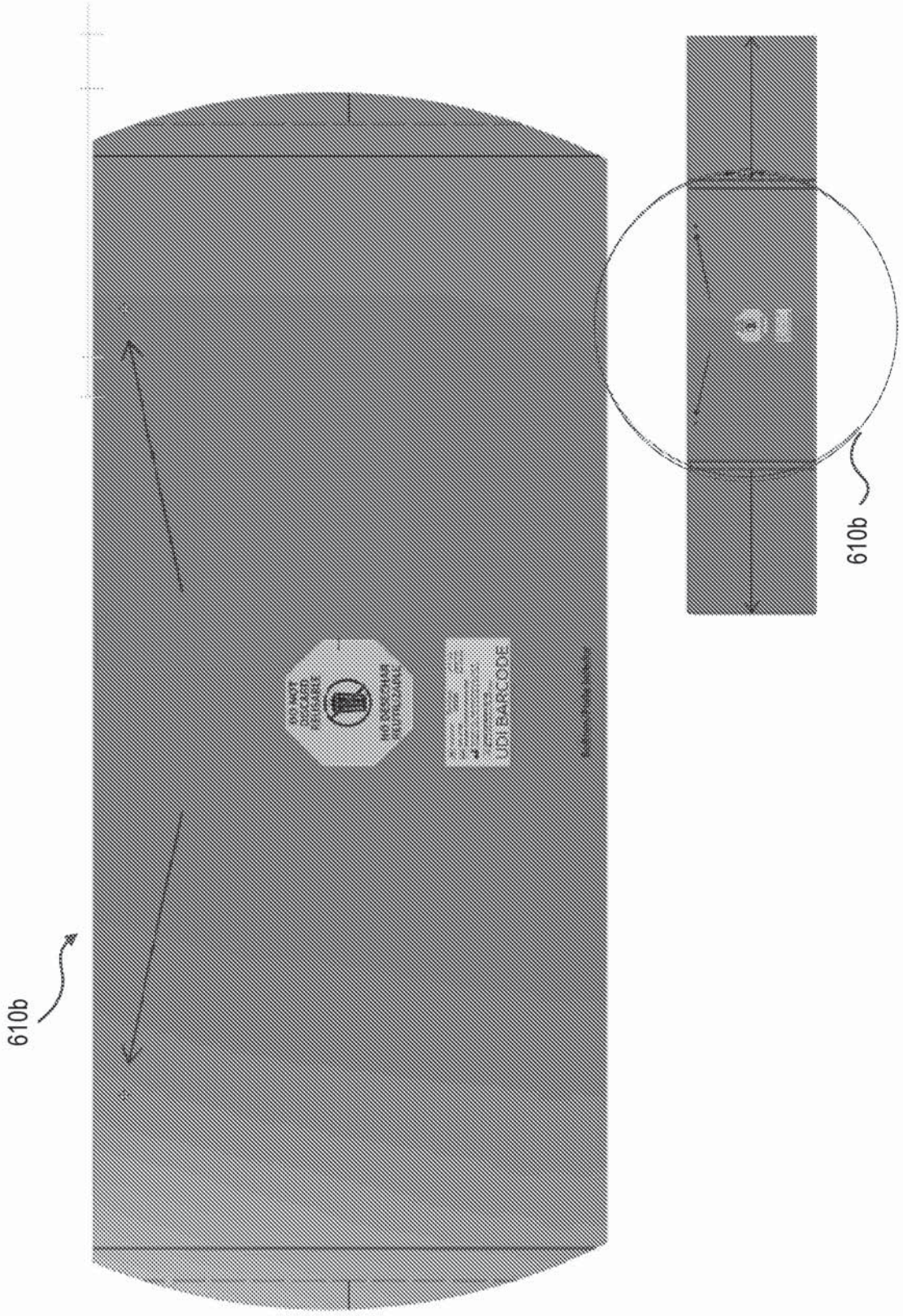

FIGURE 7B

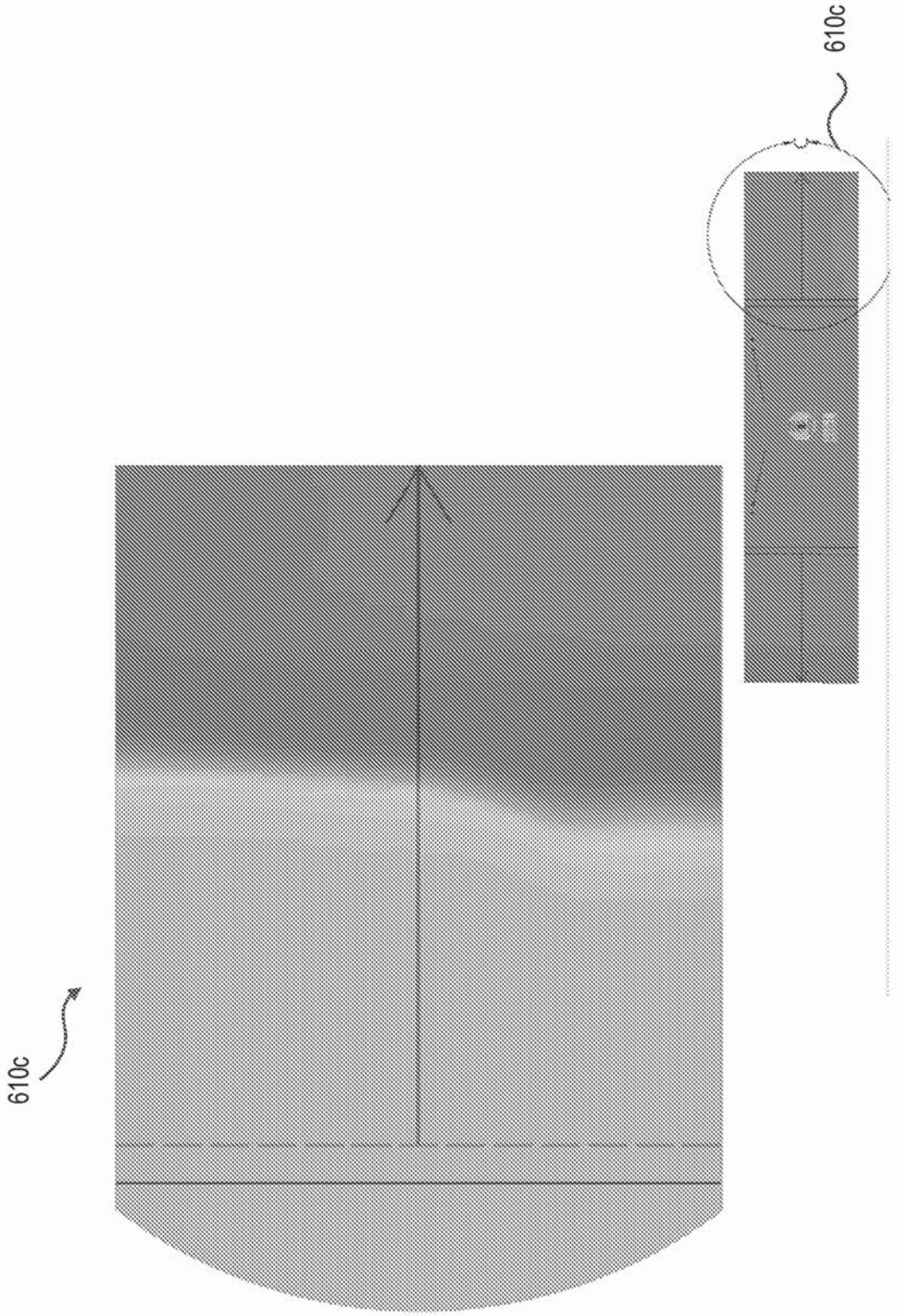

FIGURE 7C

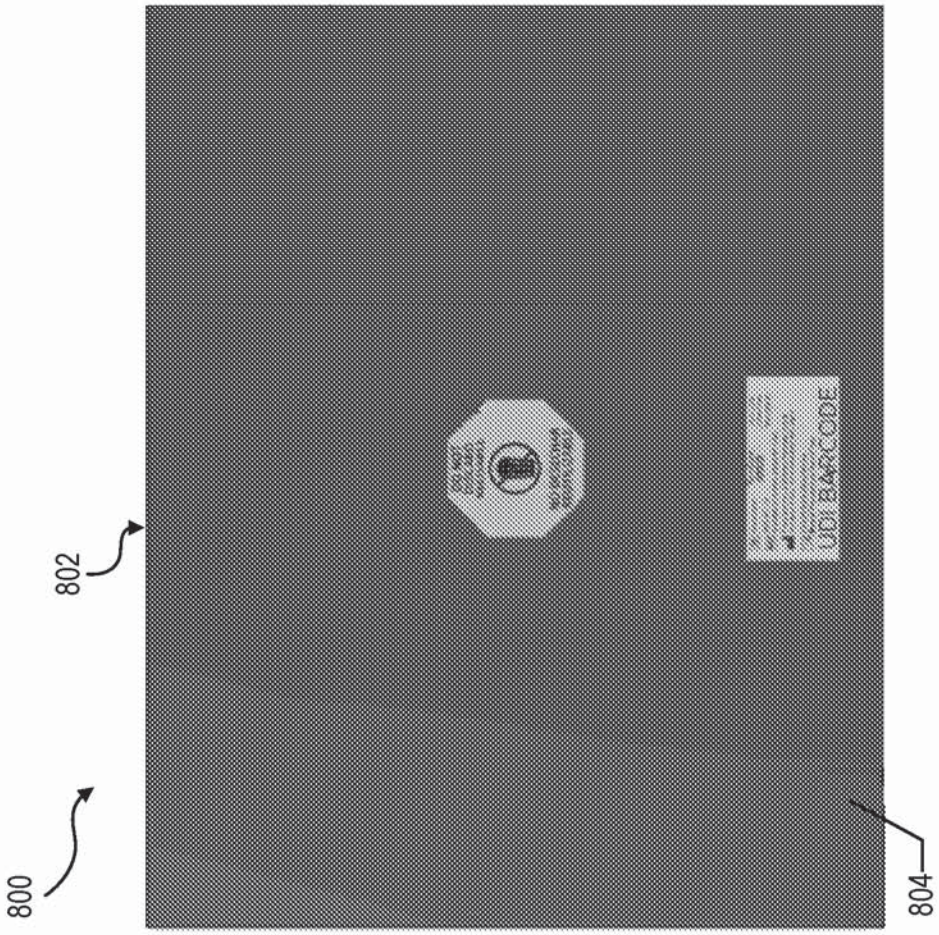

FIGURE 8

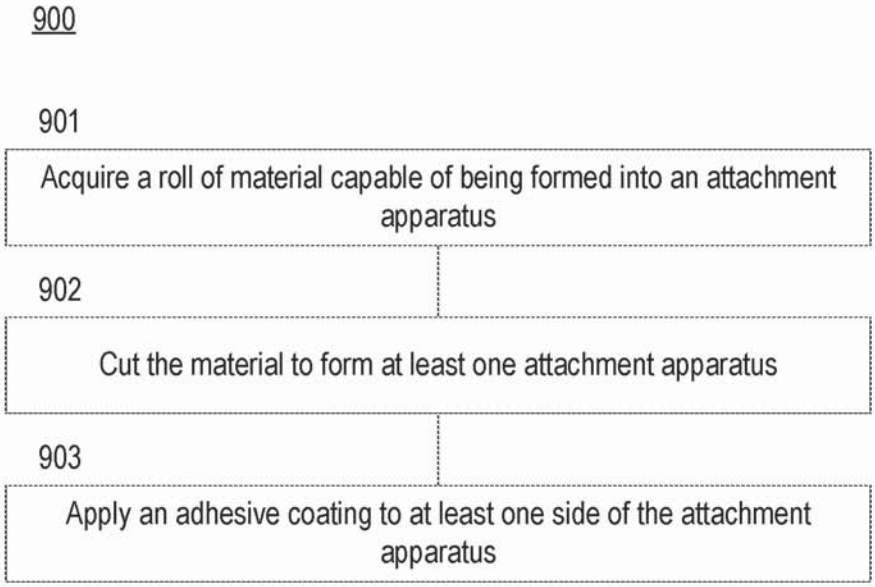
900
901
Acquire a roll of material capable of being formed into an attachment apparatus
902
Cut the material to form at least one attachment apparatus
903
Apply an adhesive coating to at least one side of the attachment apparatus

FIGURE 9

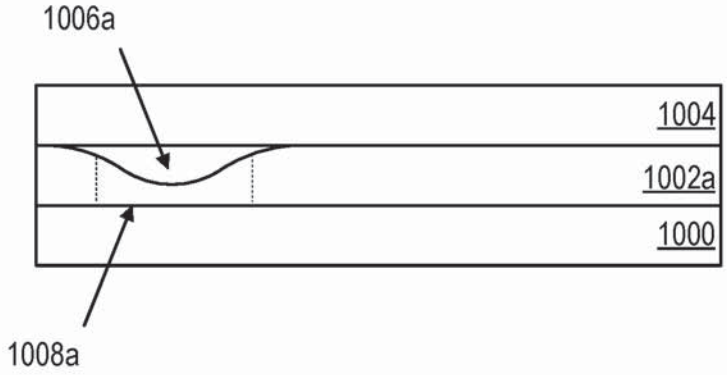

FIGURE 10A

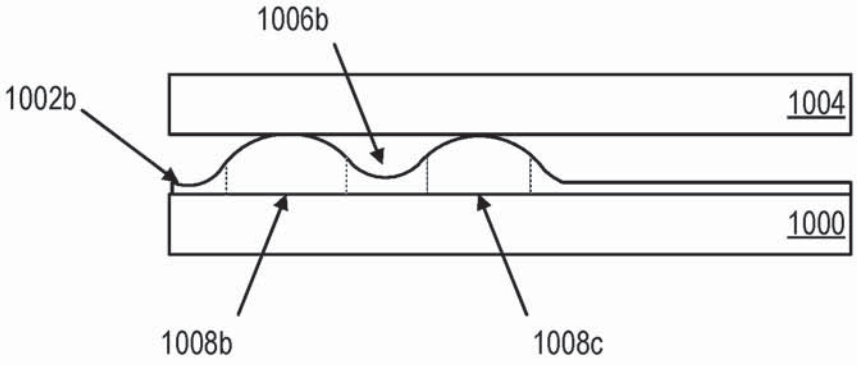

FIGURE 10B

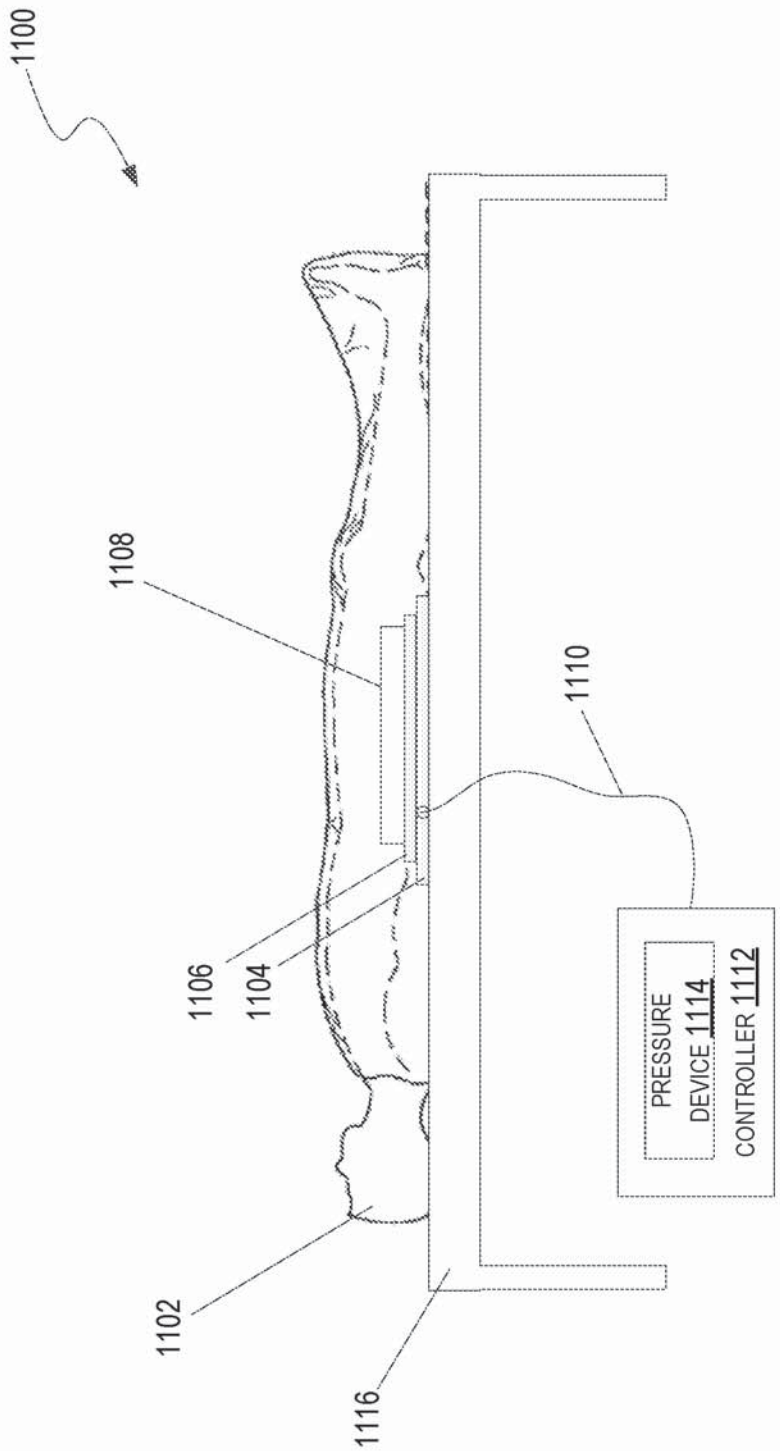
1100
1108
1110
1106
1104
1102
1116
PRESSURE DEVICE 1114
CONTROLLER 1112

FIGURE 11

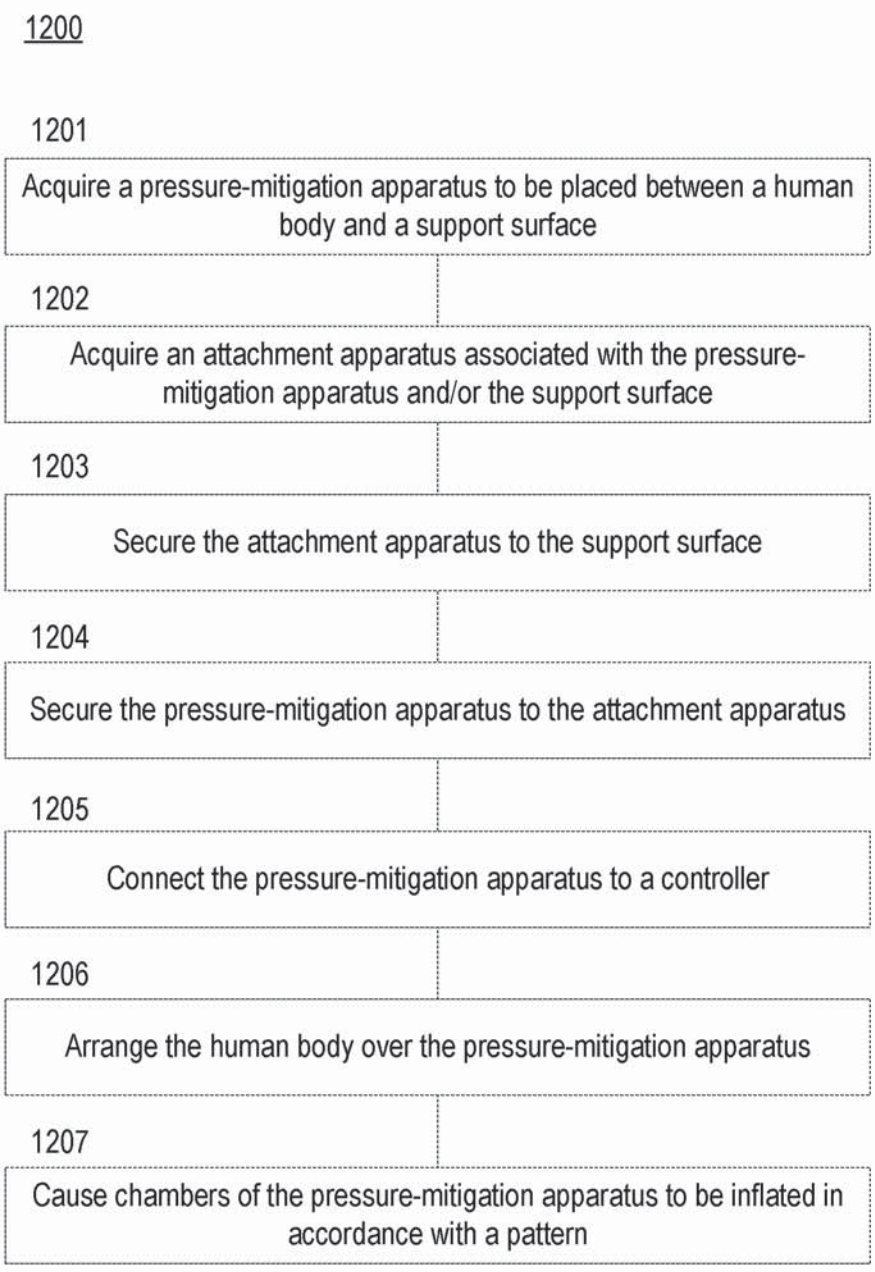
1200
1201
Acquire a pressure-mitigation apparatus to be placed between a human body and a support surface
1202
Acquire an attachment apparatus associated with the pressure-mitigation apparatus and/or the support surface
1203
Secure the attachment apparatus to the support surface
1204
Secure the pressure-mitigation apparatus to the attachment apparatus
1205
Connect the pressure-mitigation apparatus to a controller
1206
Arrange the human body over the pressure-mitigation apparatus
1207
Cause chambers of the pressure-mitigation apparatus to be inflated in accordance with a pattern

FIGURE 12

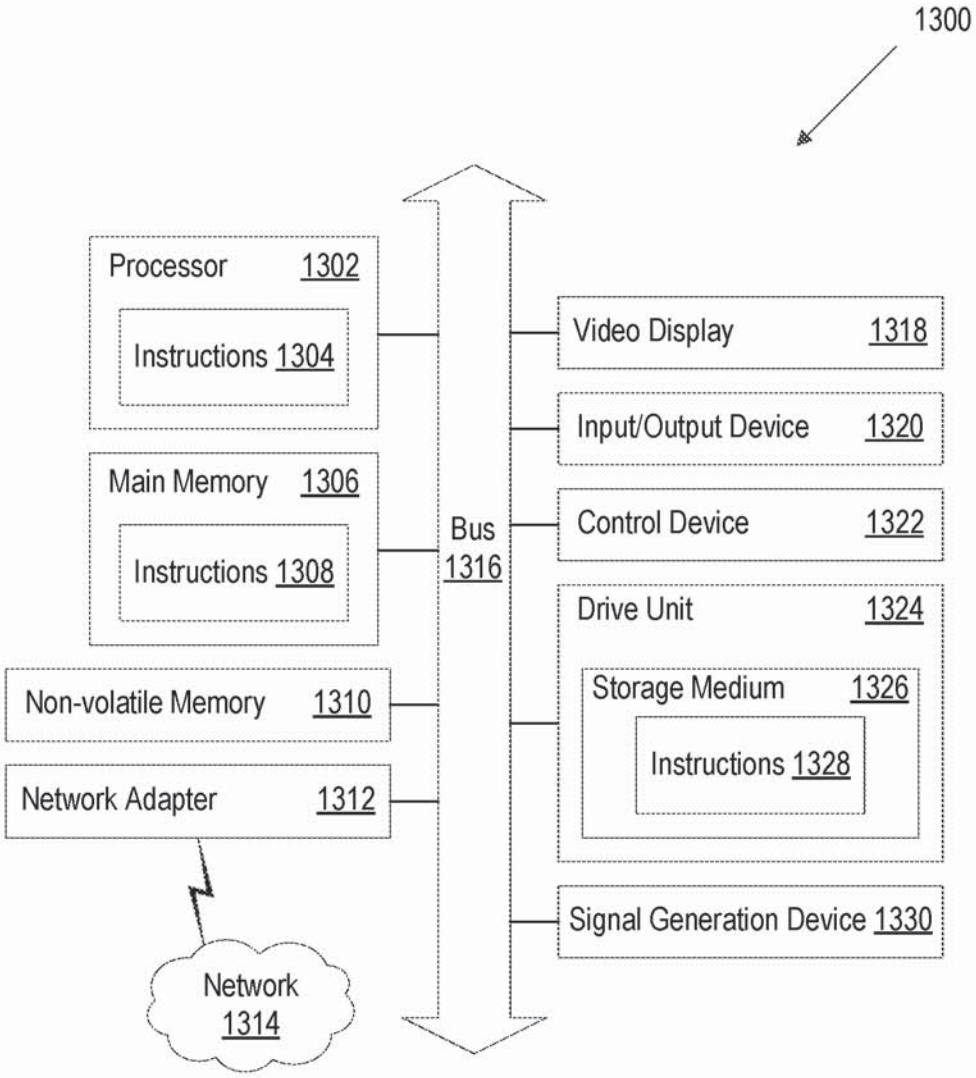
1300
Processor 1302
Instructions 1304
Main Memory 1306
Instructions 1308
Non-volatile Memory 1310
Network Adapter 1312
Network 1314
Bus 1316
Video Display 1318
Input/Output Device 1320
Control Device 1322
Drive Unit 1324
Storage Medium 1326
Instructions 1328
Signal Generation Device 1330

FIGURE 13