(12) INTERNATIONAL APPLICATION PUBLISHED UNDER THE PATENT COOPERATION TREATY (PCT)

(19) World Intellectual Property Organization
International Bureau

(43) International Publication Date
4 November 2010 (04.11.2010)

PCT

(10) International Publication Number
WO 2010/126992 A1

(51) International Patent Classification:
B01L 3/00 (2006.01) *F16L 39/00* (2006.01)
B01J 19/00 (2006.01)

(21) International Application Number:
PCT/US2010/032742

(22) International Filing Date:
28 April 2010 (28.04.2010)

(25) Filing Language: English

(26) Publication Language: English

(30) Priority Data:
09305368.4 28 April 2009 (28.04.2009) EP

(71) Applicant *(for all designated States except US)*: **CORNING INCORPORATED** [US/US]; 1 Riverfront Plaza, Corning, New York 14831 (US).

(72) Inventors; and

(75) Inventors/Applicants *(for US only)*: **GREMETZ, Sylvan M** [FR/FR]; 17 rue du bateau, Montereau Fault Yonne (FR). **JOUANNO, Jean-Marc M** [FR/FR]; 147 rue de By, F-77810 Thomery (FR). **LOBET, Olivier** [FR/FR]; 25 rue des Melezes, F-91540 Mennecy (FR). **POISSY, Stephane** [FR/FR]; 3 rue Charcot, F-91880 Brunoy (FR). **TANGUY, Ronan** [FR/FR]; 5 rue des cailloux, F-77880 Grez Sur Loing (FR).

(74) Agent: **BEAN, Gregory V**; Corning Incorporated, Intellectual Property Department, SP-TI-3-1, Corning, New York 14831 (US).

(81) Designated States *(unless otherwise indicated, for every kind of national protection available)*: AE, AG, AL, AM, AO, AT, AU, AZ, BA, BB, BG, BH, BR, BW, BY, BZ, CA, CH, CL, CN, CO, CR, CU, CZ, DE, DK, DM, DO, DZ, EC, EE, EG, ES, FI, GB, GD, GE, GH, GM, GT, HN, HR, HU, ID, IL, IN, IS, JP, KE, KG, KM, KN, KP, KR, KZ, LA, LC, LK, LR, LS, LT, LU, LY, MA, MD, ME, MG, MK, MN, MW, MX, MY, MZ, NA, NG, NI, NO, NZ, OM, PE, PG, PH, PL, PT, RO, RS, RU, SC, SD, SE, SG, SK, SL, SM, ST, SV, SY, TH, TJ, TM, TN, TR, TT, TZ, UA, UG, US, UZ, VC, VN, ZA, ZM, ZW.

(84) Designated States *(unless otherwise indicated, for every kind of regional protection available)*: ARIPO (BW, GH, GM, KE, LR, LS, MW, MZ, NA, SD, SL, SZ, TZ, UG,

[Continued on next page]

(54) Title: MICROREACTORS WITH CONNECTORS SEALED THEREON; THEIR MANUFACTURING

(57) Abstract: The present invention deals with microfluidic devices (200) including a microreactor (20) and at least one connector (101) sealed thereon. It also deals with a method for manufacturing such microfluidic devices and to blocks of material suitable as connector.

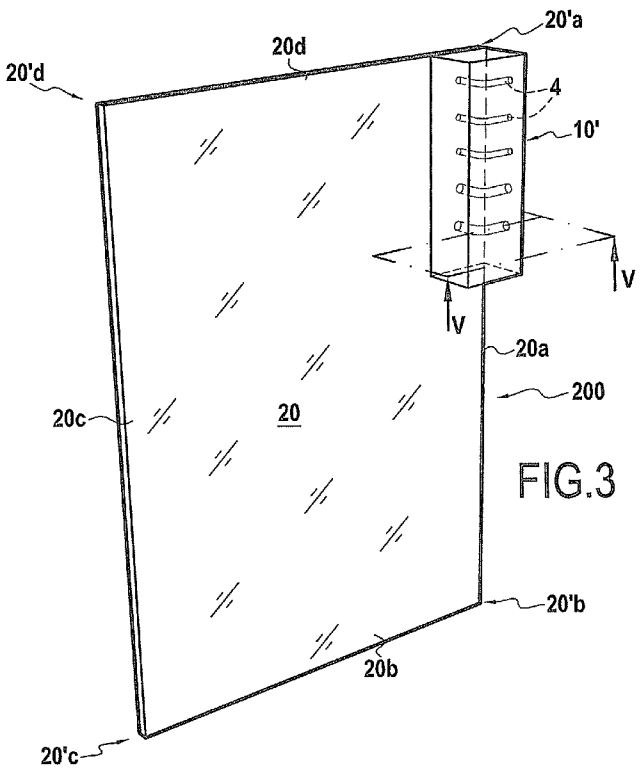

FIG.3

WO 2010/126992 A1

ZM, ZW), Eurasian (AM, AZ, BY, KG, KZ, MD, RU, TJ, TM), European (AT, BE, BG, CH, CY, CZ, DE, DK, EE, ES, FI, FR, GB, GR, HR, HU, IE, IS, IT, LT, LU, LV, MC, MK, MT, NL, NO, PL, PT, RO, SE, SI, SK, SM, TR), OAPI (BF, BJ, CF, CG, CI, CM, GA, GN, GQ, GW, ML, MR, NE, SN, TD, TG).

Published:

— *with international search report (Art. 21(3))*