REPLACEMENT SHEET
22 SEP 2006

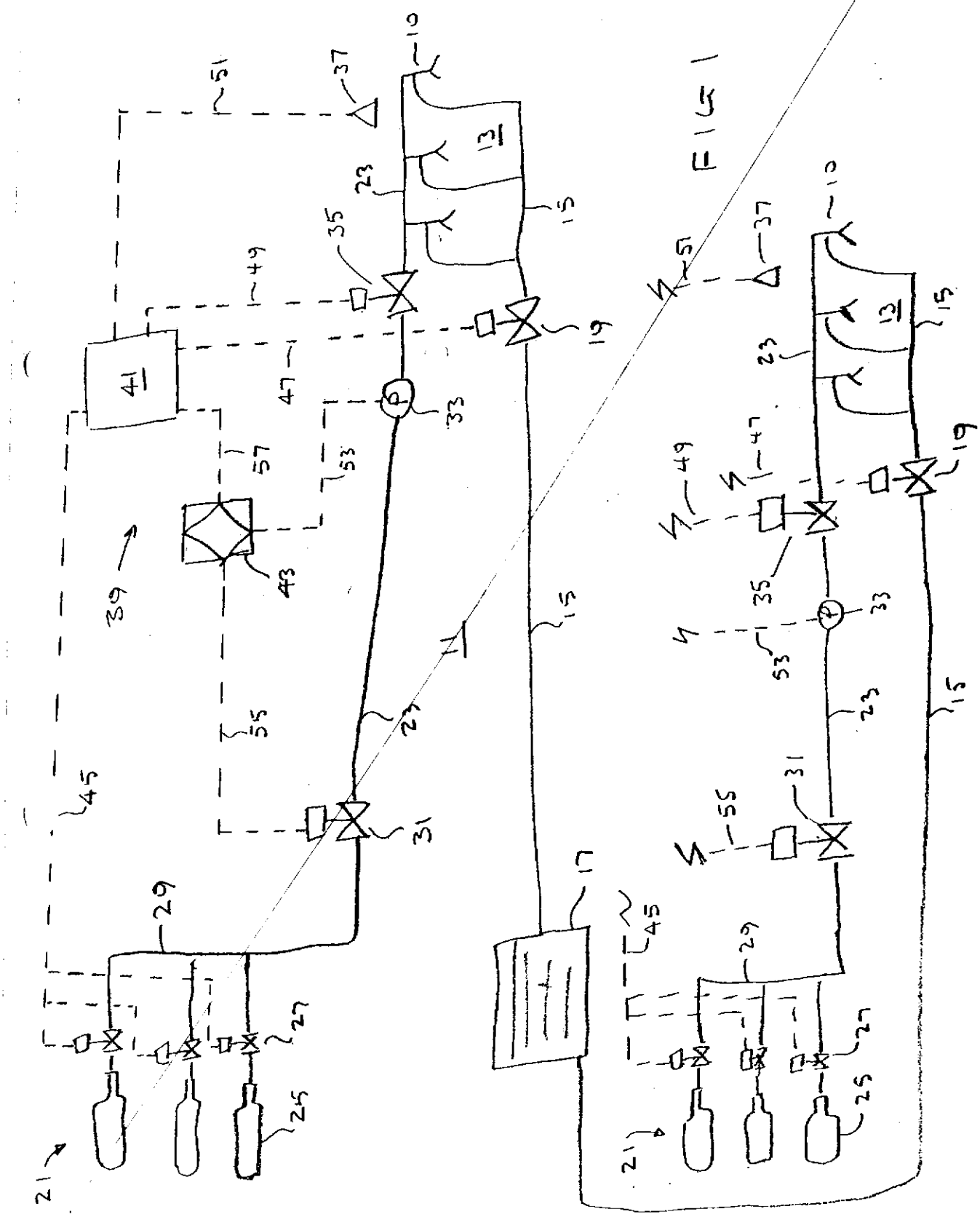

FIG 1

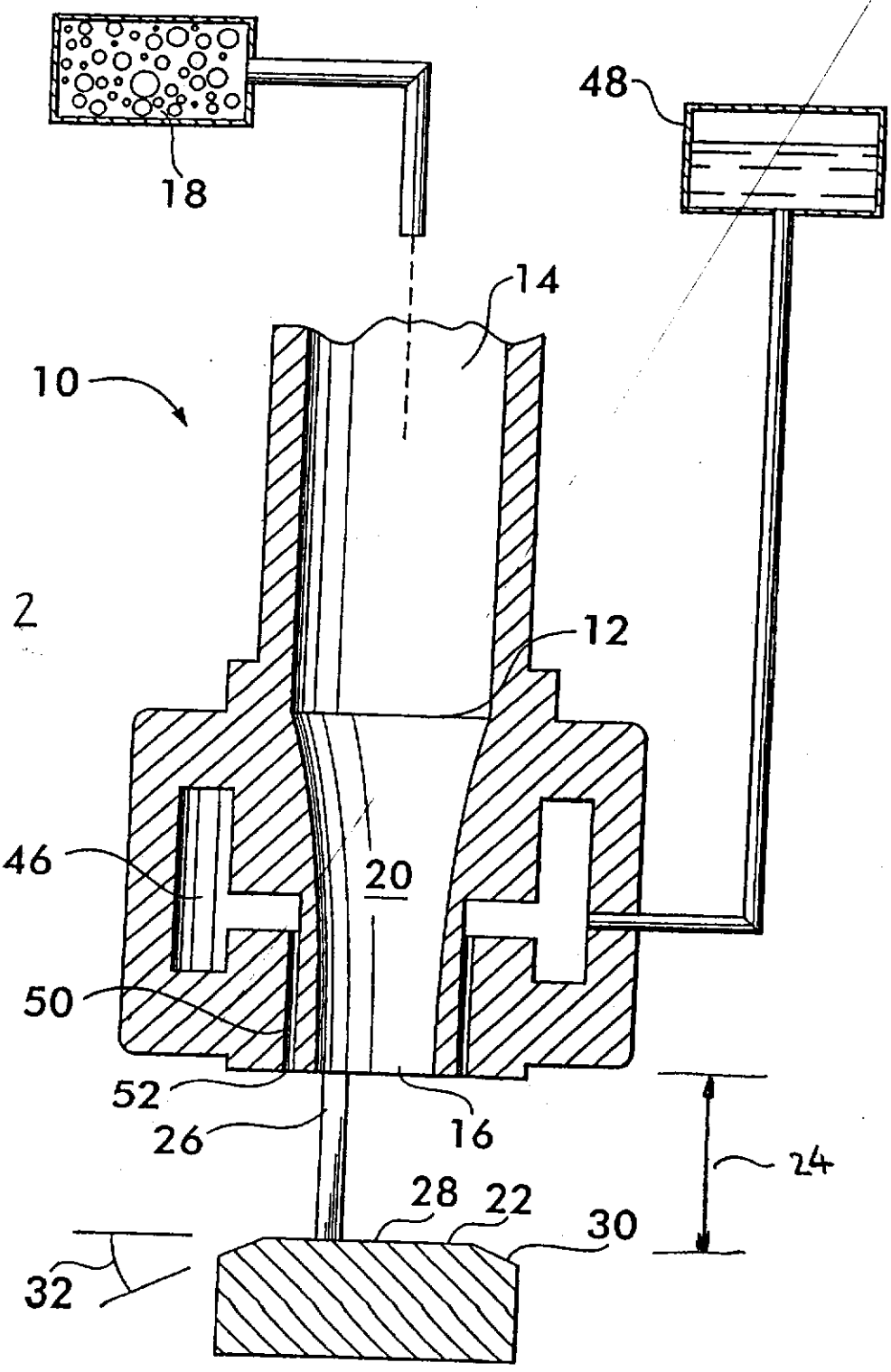

FIG. 2

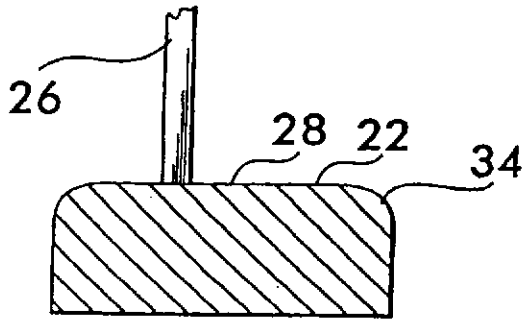

FIG. 3

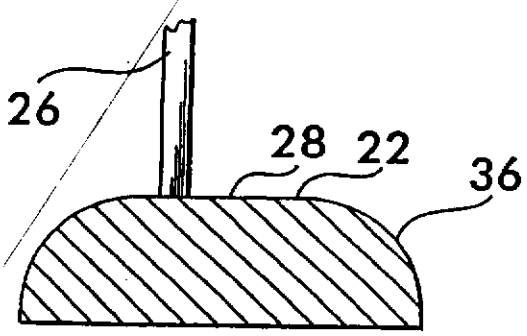

FIG. 4

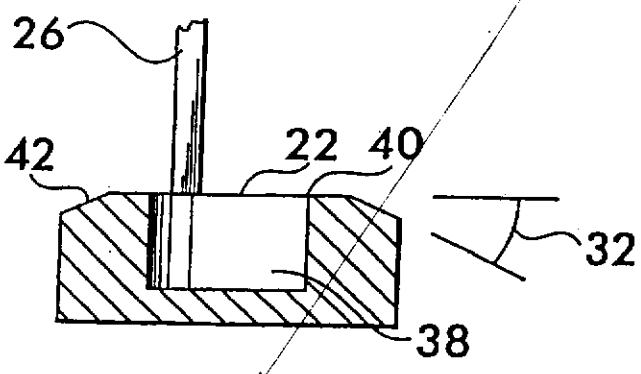

FIG. 5

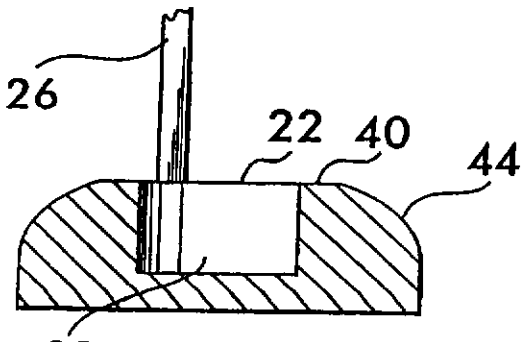

FIG. 6

FIG. 7

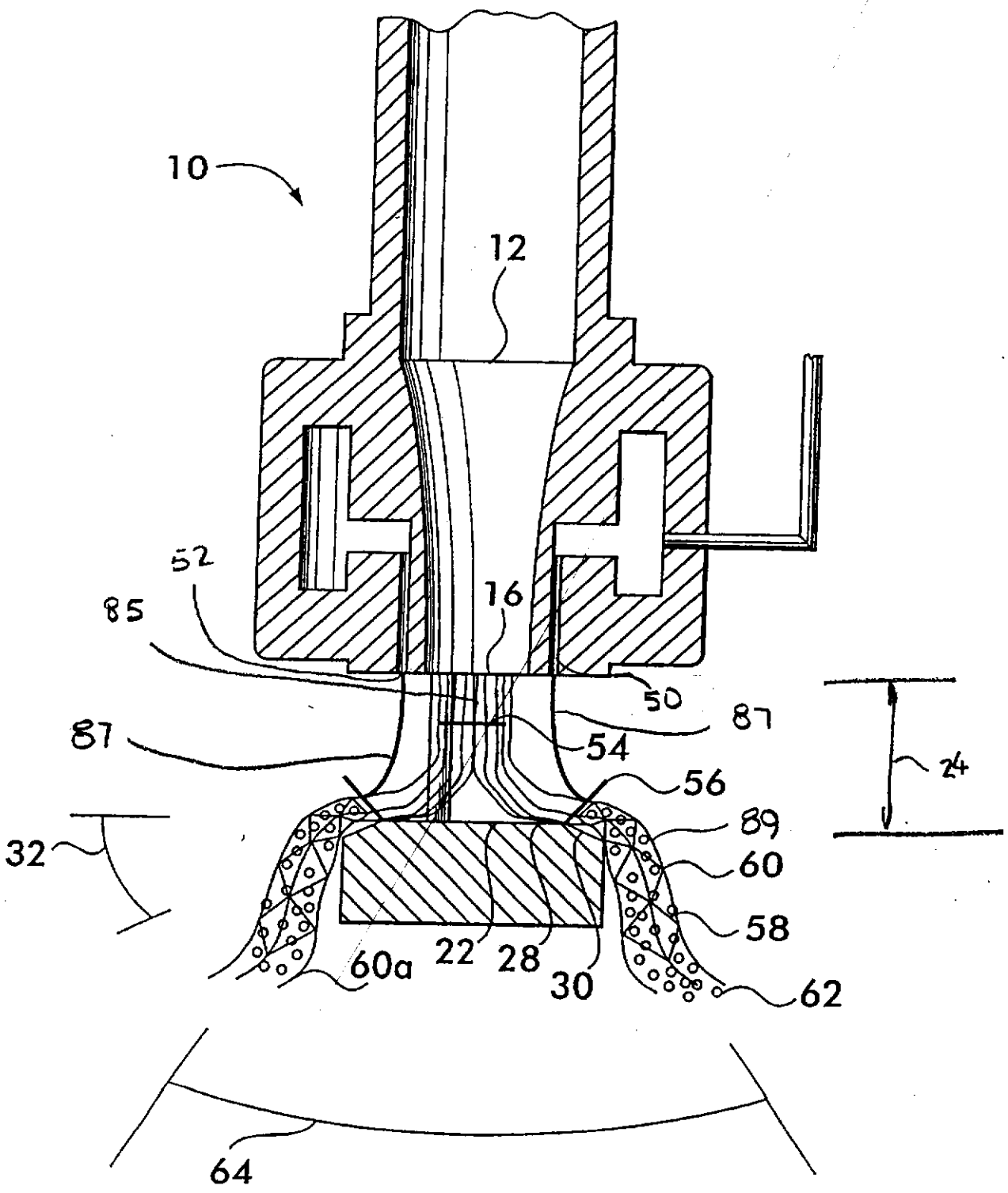

FIG. 8

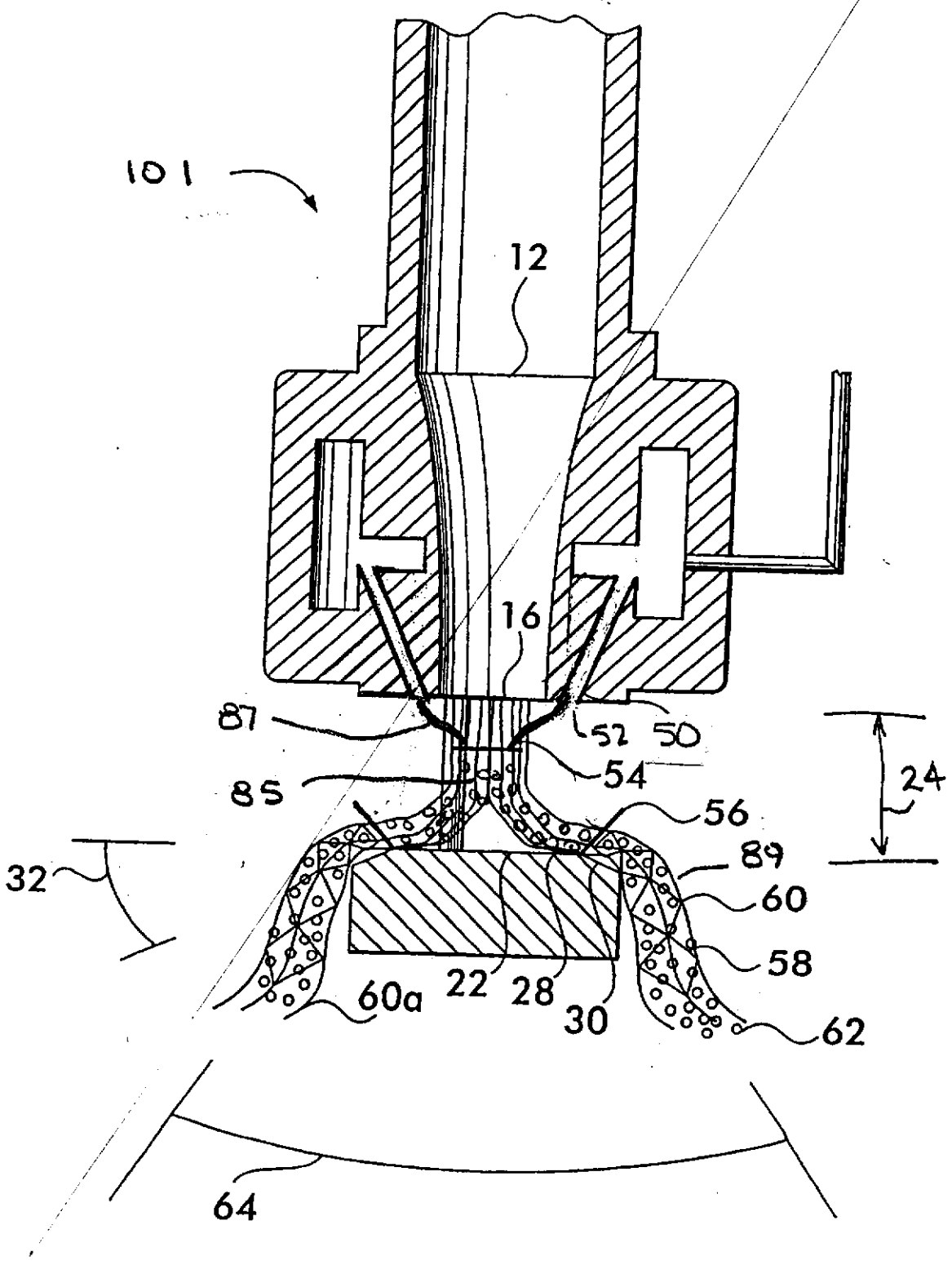

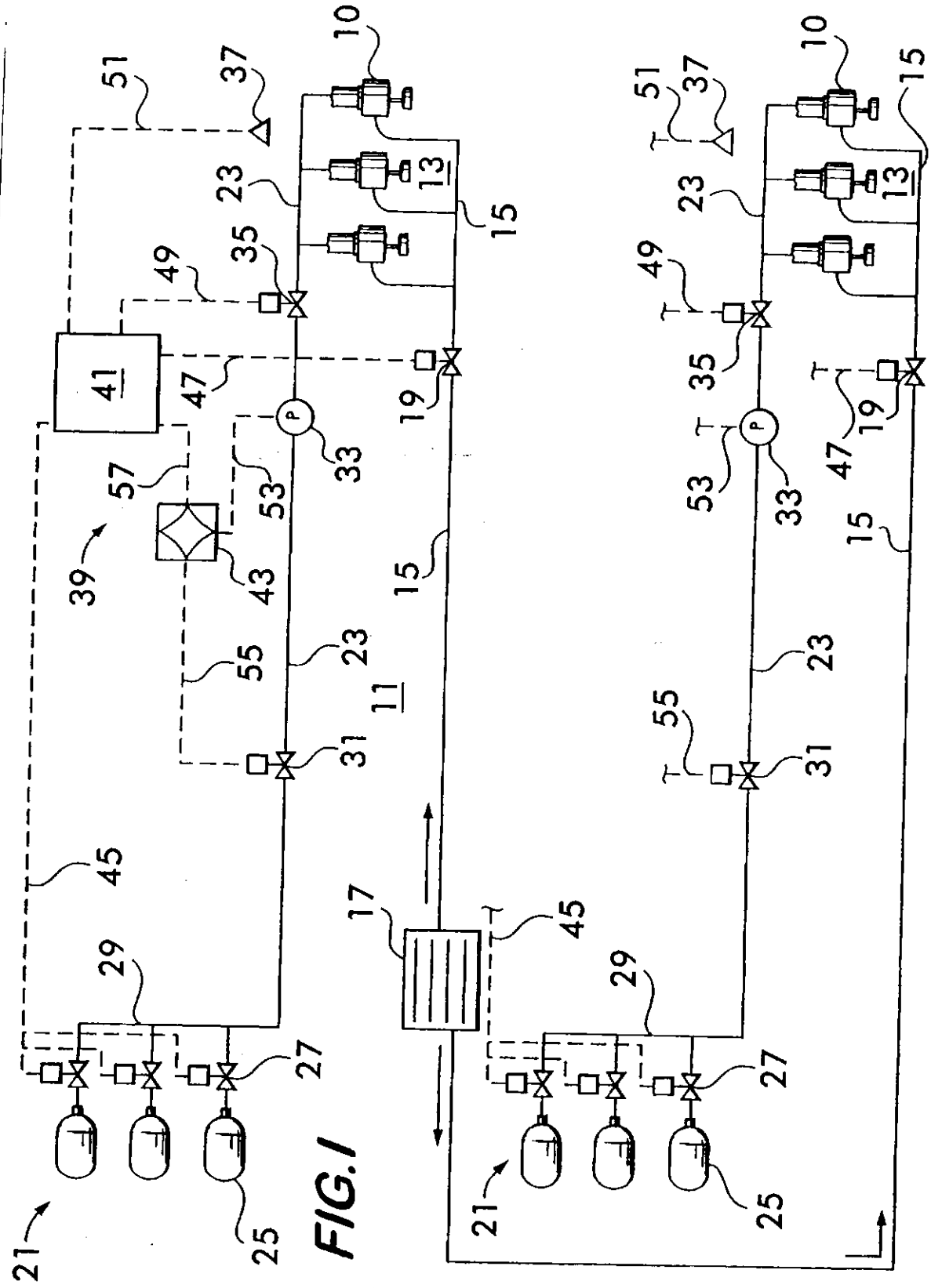
10
51
37
23
13
15
49
35
41
47
19
33
53
57
39
43
55
11
31
45
29
27
17
21
25

FIG.1

REPLACEMENT SHEET
22 SEP 2006

FIG.2

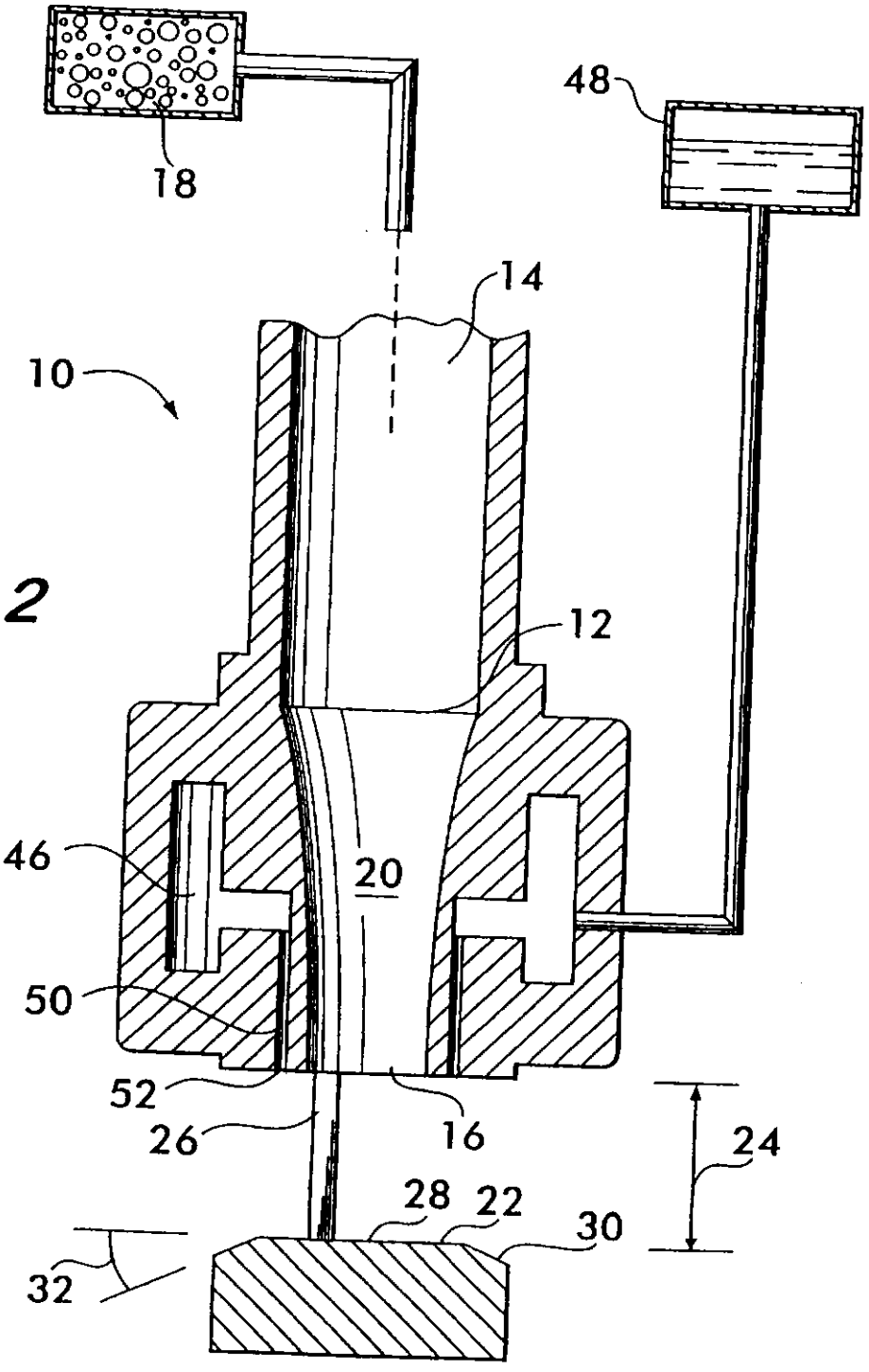

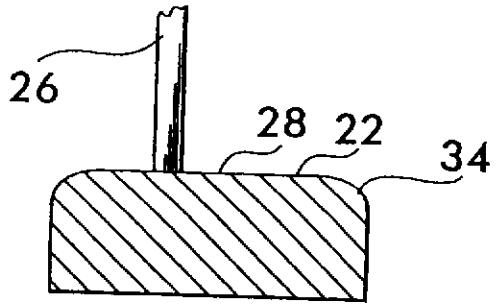

FIG.3

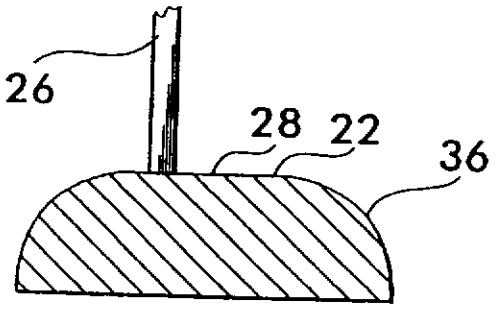

FIG.4

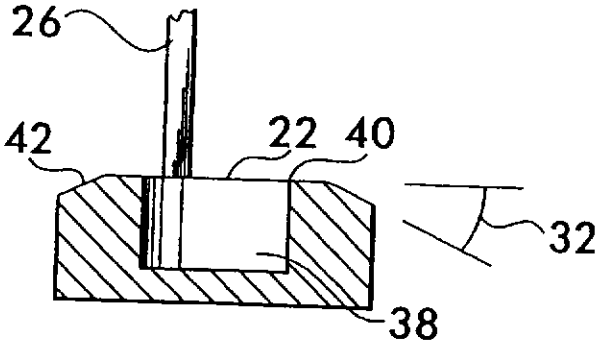

FIG.5

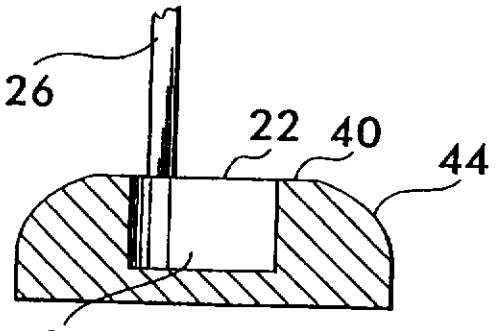

FIG.6

REPLACEMENT SHEET
22 SEP 2006

FIG. 7

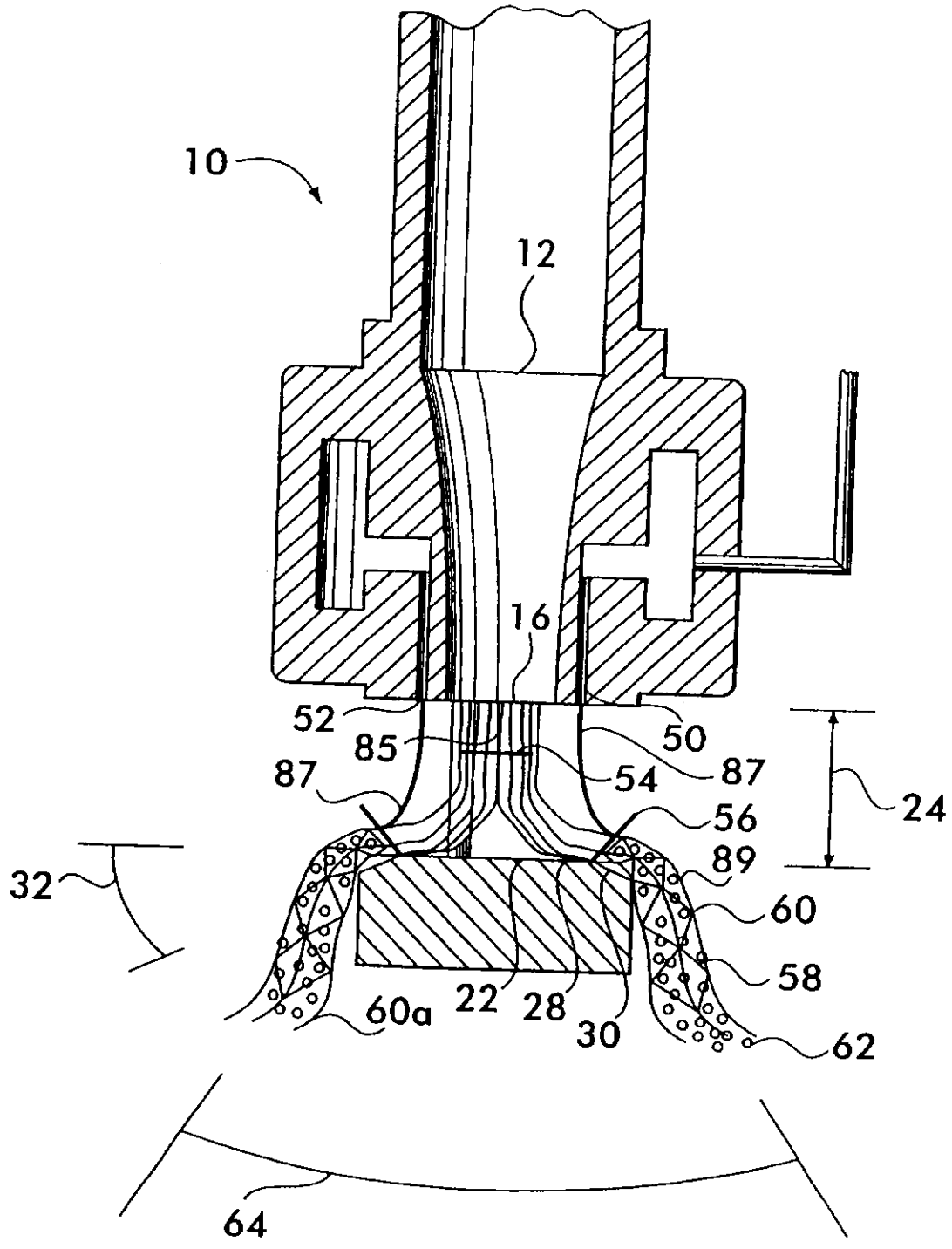

REPLACEMENT SHEET
22 SEP 2006

FIG.8

