[Fig.1]

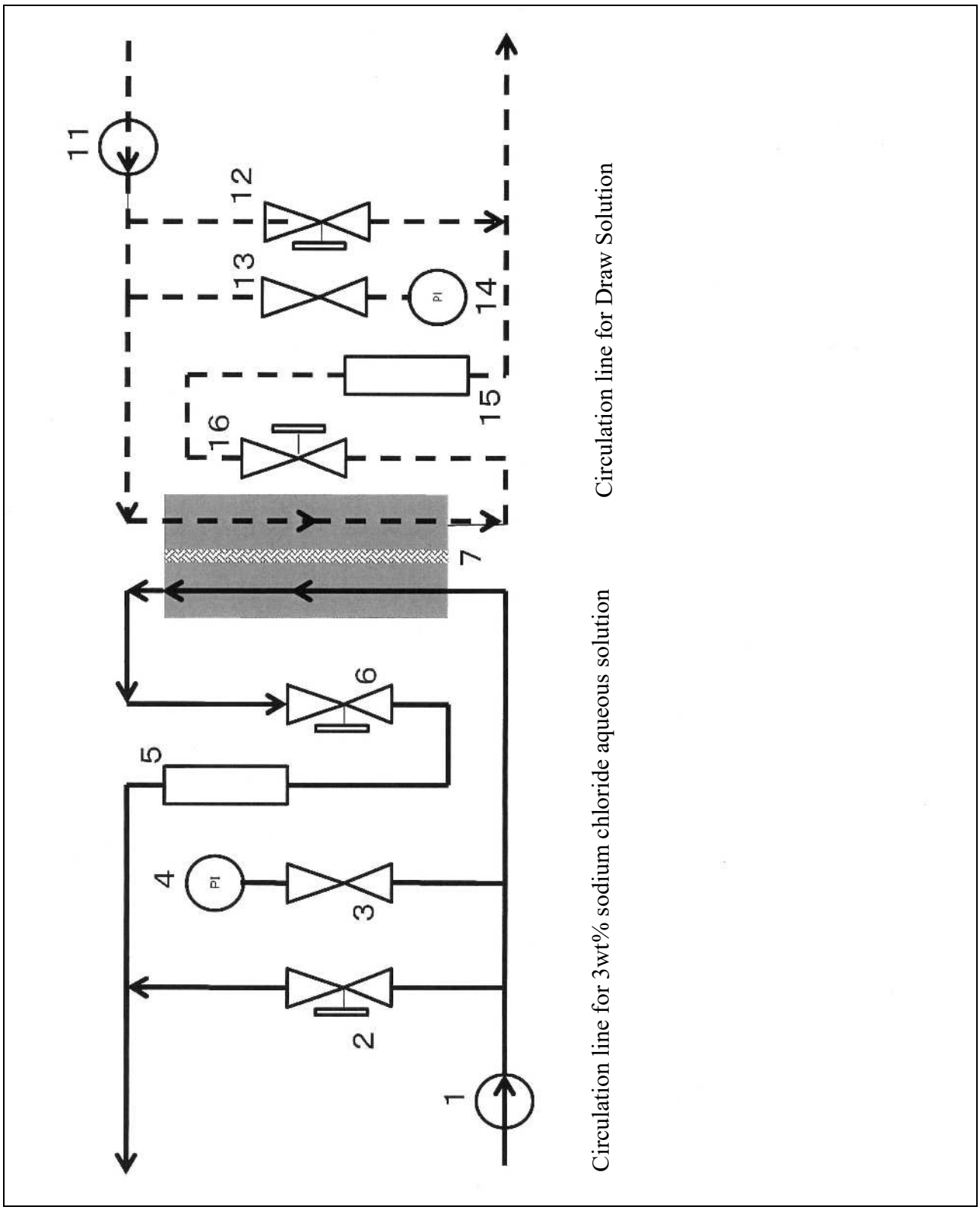
11
12
13
14
PI
15
16
7
6
5
4
PI
3
2
1
Circulation line for Draw Solution
Circulation line for 3wt% sodium chloride aqueous solution

[Fig.2]

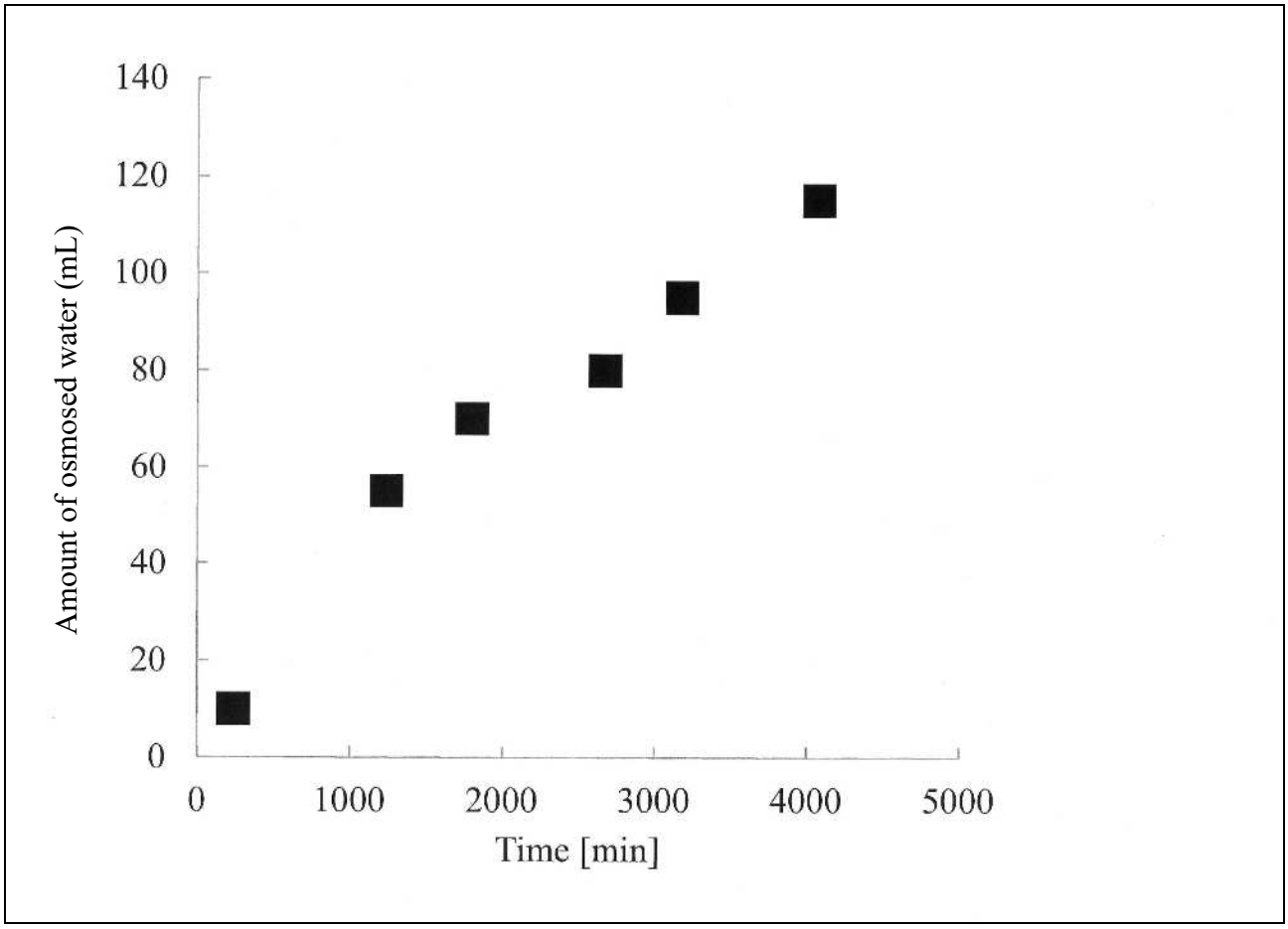
140
120
100
80
60
40
20
0
Amount of osmosed water (mL)
0
1000
2000
3000
4000
5000
Time [min]