Fig.1

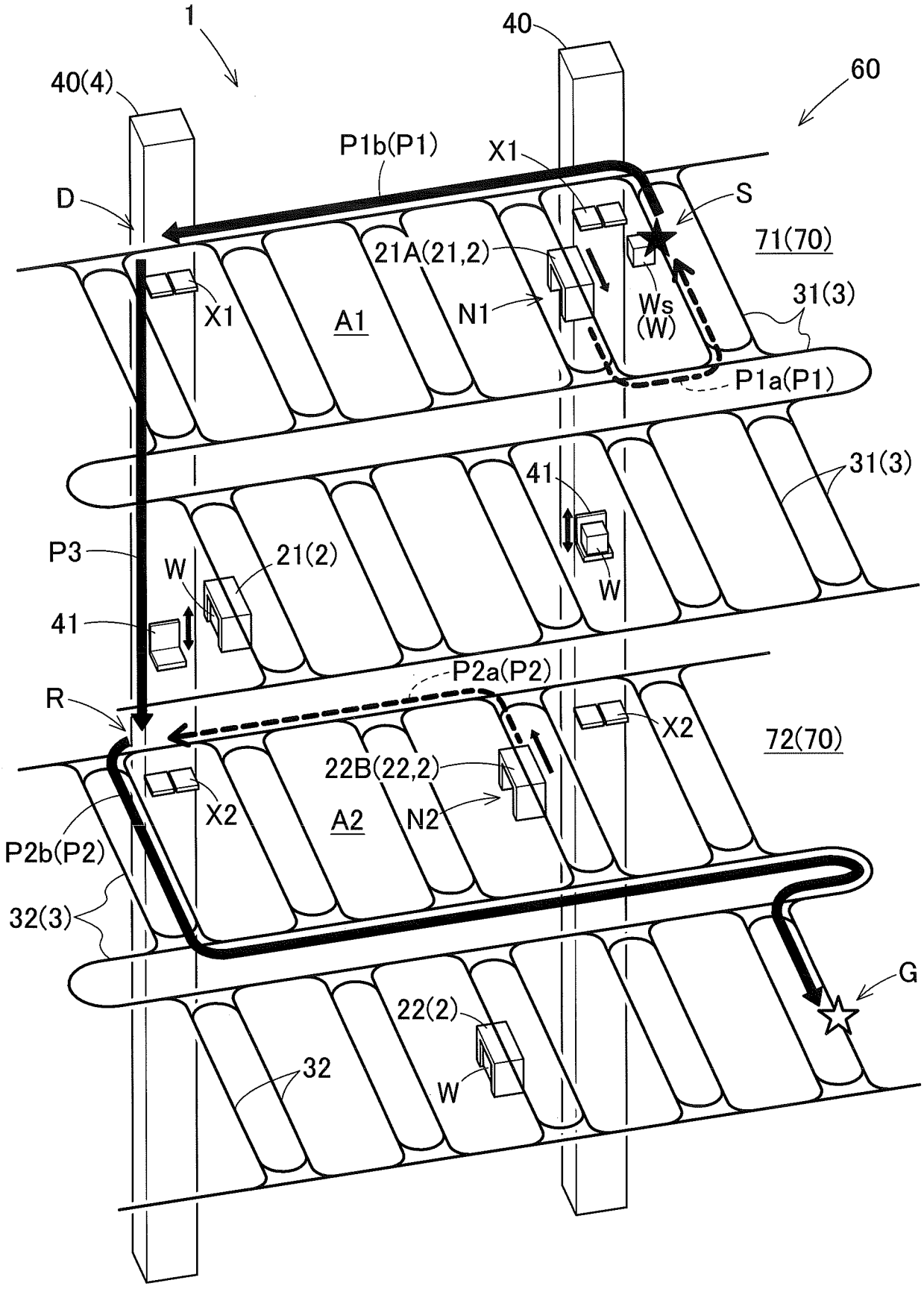
1
40
40(4)
60
P1b(P1)
X1
D
S
71(70)
21A(21,2)
X1
A1
N1
Ws
(W)
31(3)
P1a(P1)
31(3)
41
P3
W
21(2)
W
41
P2a(P2)
R
X2
72(70)
22B(22,2)
X2
A2
N2
P2b(P2)
32(3)
G
22(2)
32
W

Fig.2

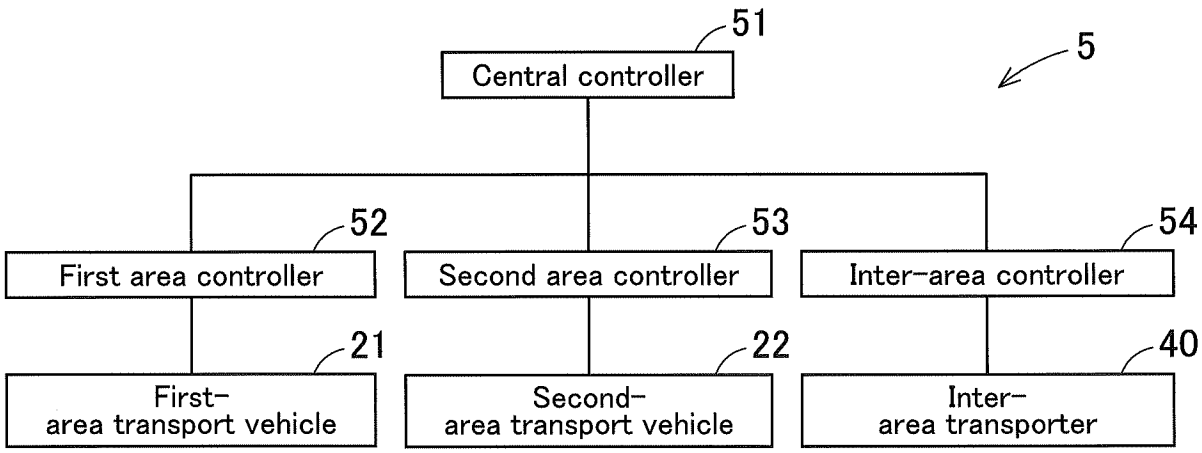
51
Central controller
5
52
First area controller
53
Second area controller
54
Inter-area controller
21
First-
area transport vehicle
22
Second-
area transport vehicle
40
Inter-
area transporter

Fig.3

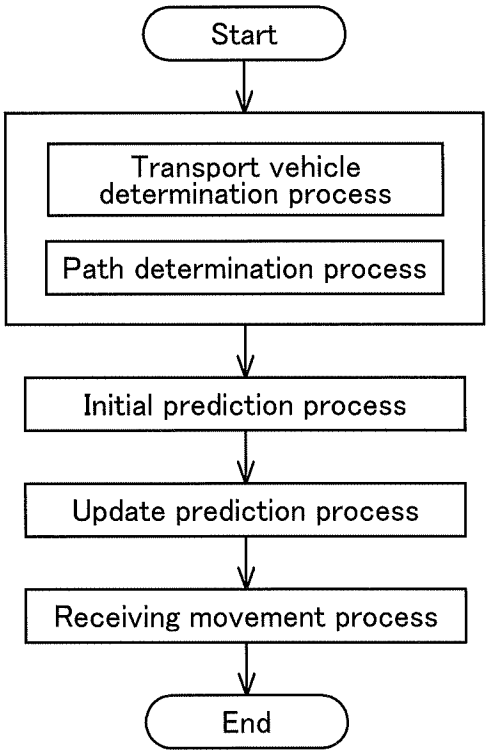
Start
Transport vehicle
determination process
Path determination process
Initial prediction process
Update prediction process
Receiving movement process
End

Fig.4

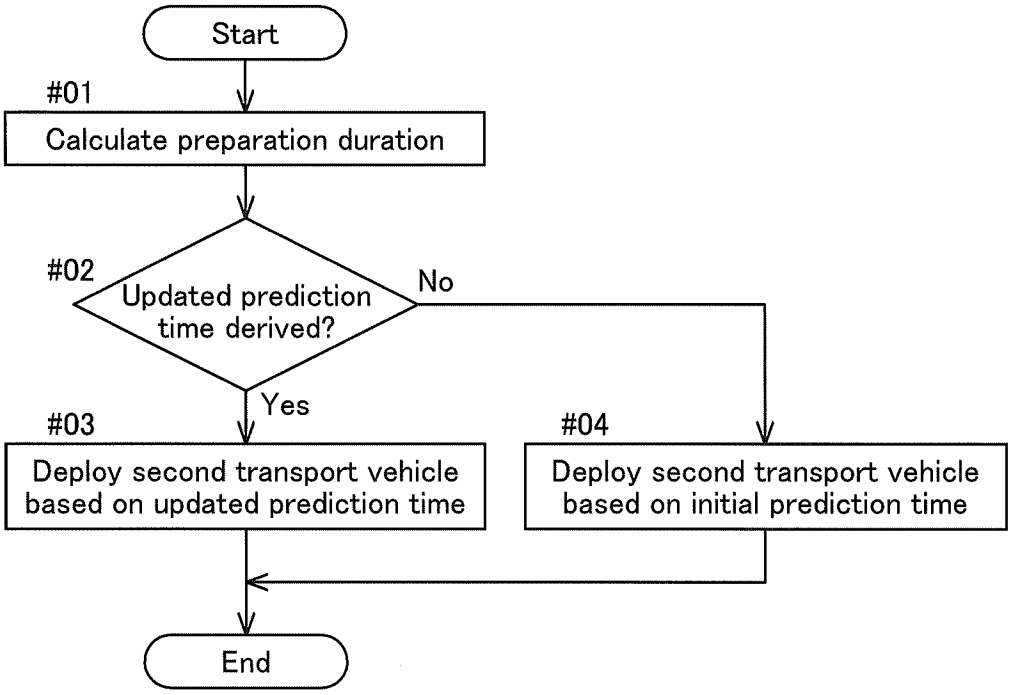
Start
#01
Calculate preparation duration
#02
Updated prediction time derived?
No
Yes
#03
Deploy second transport vehicle based on updated prediction time
#04
Deploy second transport vehicle based on initial prediction time
End

Fig.5

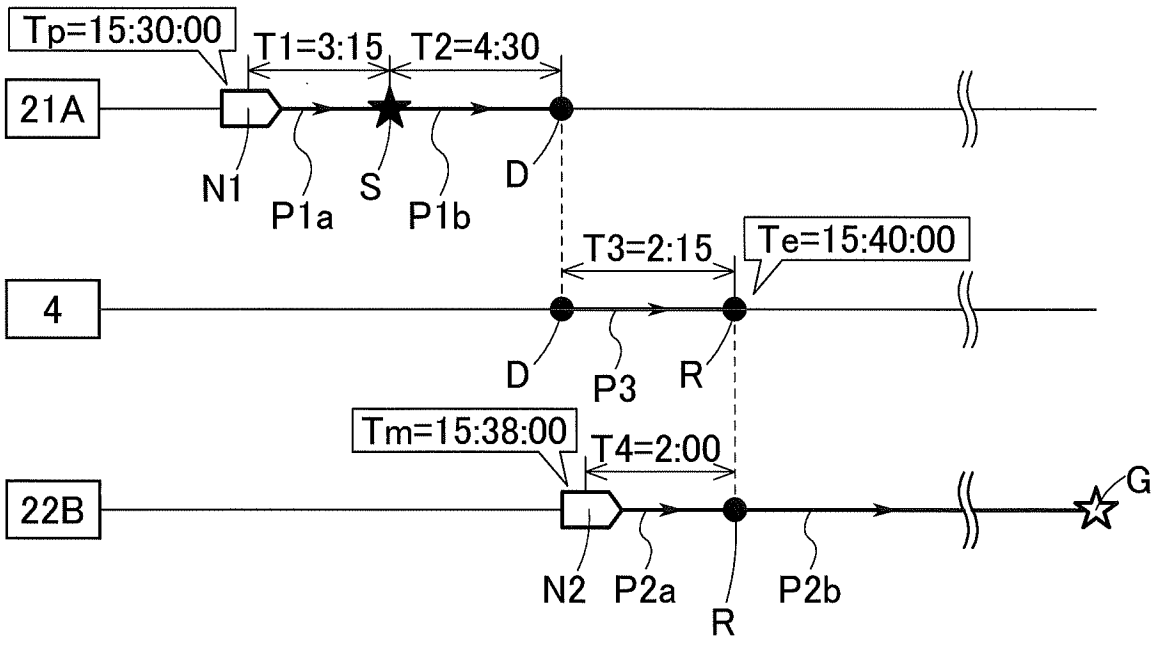
Tp=15:30:00
T1=3:15
T2=4:30
21A
N1
P1a
S
P1b
D
T3=2:15
Te=15:40:00
4
D
P3
R
Tm=15:38:00
T4=2:00
22B
G
N2
P2a
R
P2b

Fig.6

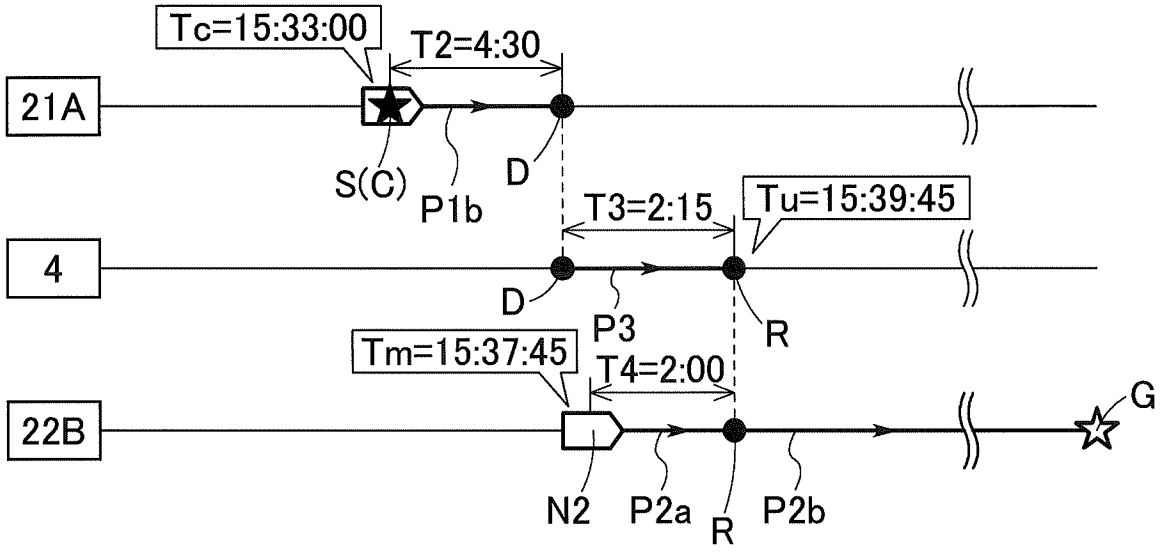

Fig.7

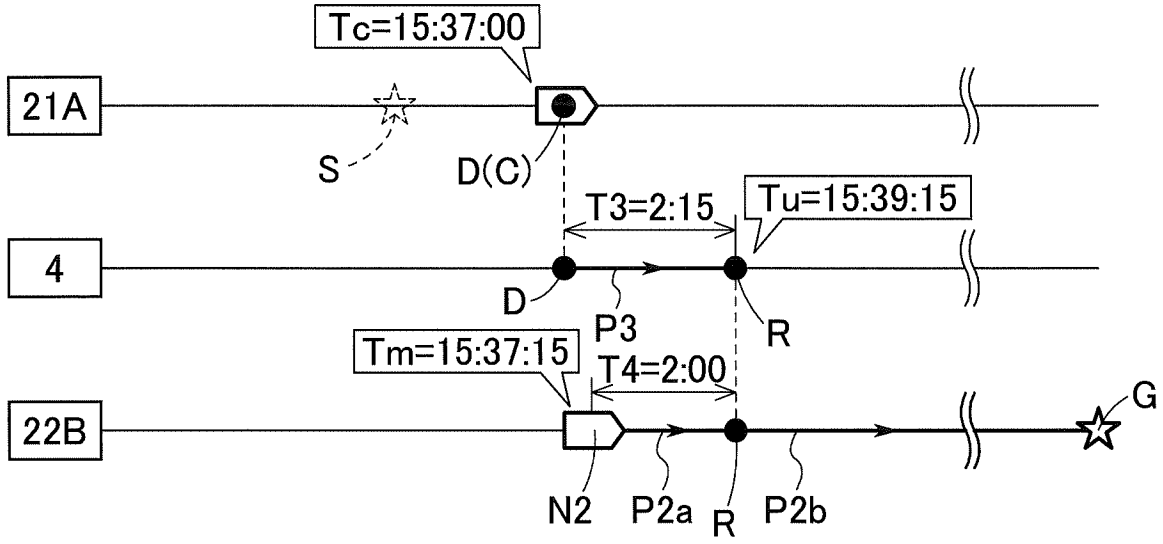

Fig.8

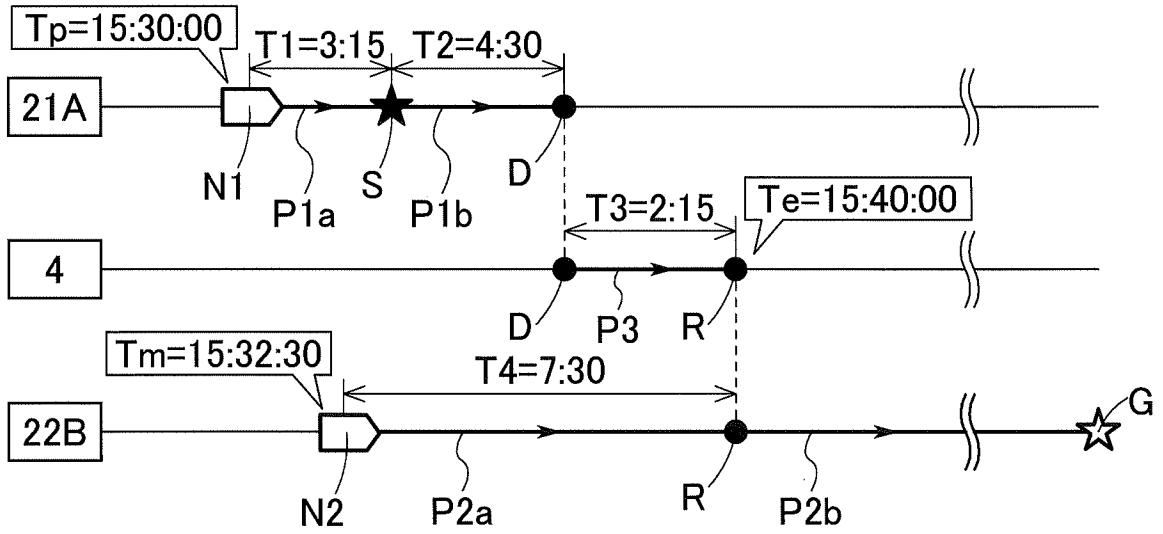

Fig.9

