Capacitors as energy storage device have well-known advantages versus electrochemical energy storage, e.g. a battery. Compared to batteries, capacitors are able to store energy with very high power density, i.e., very high charge/recharge rates, have long shelf life with little degradation, and can be charged and discharged (cycled) hundreds of thousands or millions of times. However, conventional capacitors often do not store energy in a sufficiently small volume or weight as compared to the case of a battery, or at low energy storage cost, which makes capacitors impractical for some applications, for example electric vehicles. Accordingly, it may be an advance in energy storage technology to provide capacitors of higher volumetric and mass energy storage density and lower cost.

SUMMARY

Disclosed is an organic compound characterized by electronic polarizability and having a following general structural formula:

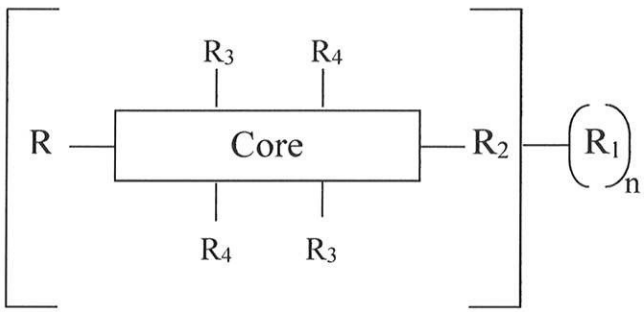

where Core is an aromatic polycyclic conjugated molecule, R_1 is group providing solubility of the organic compound in an organic solvent, n is 1, 2, 3, 4, 5, 6, 7 or 8, R_2 is substitute located in apex positions, R3 and R4 are substitutes located in side (lateral) positions and, the core has flat anisometric form, the R_2 substitutes are selected from hydrogen and electrophilic groups (acceptors), R_3 substitutes and R_4 substitutes are independently selected from hydrogen and nucleophilic groups (donors) or vice versa, R_3 substitutes and R_4 substitutes are independently selected from hydrogen and nucleophilic groups (donors), R_2 substitutes are selected from hydrogen and electrophilic groups (acceptors), and the substitutes R_2, R_3 and R_4 cannot be hydrogen simultaneously.

According to one aspect there is provided an organic compound characterized by electronic polarizability and having a following general structural formula:

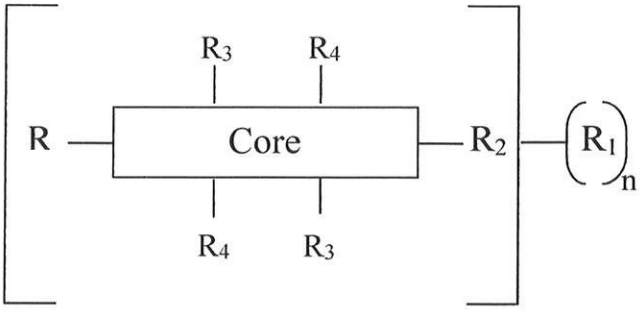

where Core is an aromatic polycyclic conjugated molecule, R_1 is group providing solubility of the organic compound in an organic solvent, n is 1, 2, 3, 4, 5, 6, 7 or 8, R_2 are substitutes located in apex positions, R3 and R4 are substitutes located in side (lateral) positions and, wherein the core has flat anisometric form and the R_2 substitutes are selected from hydrogen and electrophilic groups (acceptors), R_3 substitutes and R_4 substitutes are independently selected from hydrogen and nucleophilic groups (donors) or vice versa, R_3 substitutes and R_4 substitutes are independently selected from hydrogen and nucleophilic groups (donors), and wherein the substitutes R_2, R_3 and R_4 cannot all be hydrogen.

In another aspect, there is provided a crystal dielectric layer comprising the disclosed organic compound.

The present disclosure provides a capacitor comprising a first electrode, a second electrode, and a crystal dielectric layer disposed between said first and second electrodes, wherein said electrodes are flat and planar and positioned parallel to each other, and wherein said crystal dielectric layer comprises the disclosed organic compound. Said crystal dielectric layer comprises supramolecules formed with the aromatic polycyclic conjugated cores, and isotropic insulating sublayers formed with the substitutes served as the isolating groups. In one aspect, there is provided a capacitor comprising a first electrode, a second electrode, and a crystal dielectric layer disposed between said first and second electrodes, wherein said electrodes are flat and planar and positioned parallel to each other, and wherein said crystal dielectric layer comprises the disclosed organic compound, and wherein said crystal dielectric layer comprises supramolecules formed with the aromatic polycyclic conjugated cores, and isotropic insulating sublayers formed with the R_1 groups served as the isolating groups.

Additional aspects and advantages of the present disclosure will become readily apparent to those skilled in this art from the following detailed description, wherein only illustrative embodiments of the present disclosure are shown and described. As will be realized, the present disclosure is capable of other and different embodiments, and its several details are capable of modifications in various obvious respects, all without departing from the disclosure. Accordingly, the drawings and description are to be regarded as illustrative in nature, and not as restrictive.

INCORPORATION BY REFERENCE

All publications, patents, and patent applications mentioned in this specification are herein incorporated by reference to the same extent as if each individual publication, patent, or patent application was specifically and individually indicated to be incorporated by reference.

BRIEF DESCRIPTION OF THE DRAWING

Figure 1 schematically shows a capacitor according to an aspect of the present disclosure.

DETAILED DESCRIPTION

While various implementations of aspects of the present disclosure have been shown and described herein, it will be obvious to those skilled in the art that such implementations are provided by way of example only. Numerous variations, changes, and substitutions may occur to those skilled in the art without departing from the aspects of the present disclosure. It should be understood that various alternatives to the implementations described herein may be employed.

The present disclosure provides an organic compound. Existence of the electrophilic groups (acceptors) and the nucleophilic groups (donors) in the aromatic polycyclic conjugated core promotes increase of electronic polarizability of these cores. Under the influence of an external electric field electrons are displaced from the nucleophilic groups (donors) to the electrophilic groups (acceptors) that lead to increase of an electronic polarizability of such molecules. Thus a distribution of electronic density in the core is non-uniform.

In one implementation, the R_1 groups serve as the isolating groups and are attached to the aromatic polycyclic conjugated core in apex positions and/or side position. In another embodiment of the present invention, the aromatic polycyclic conjugated Core in the above