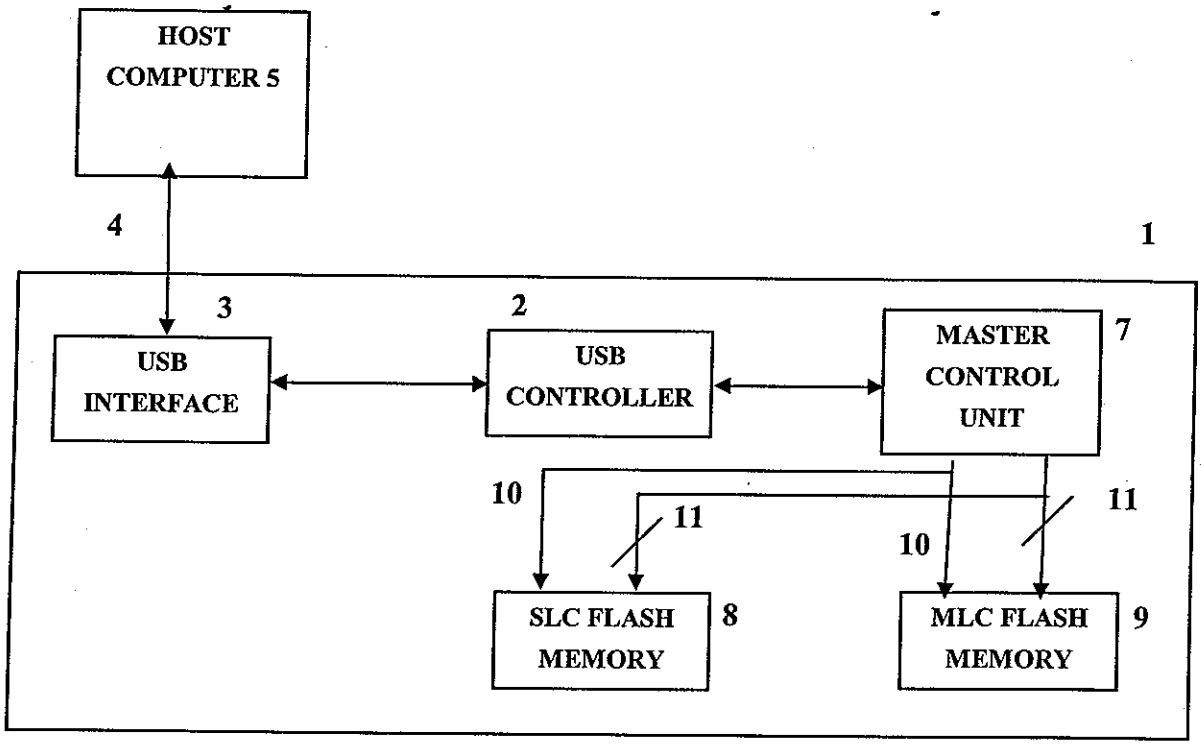

Figure 1

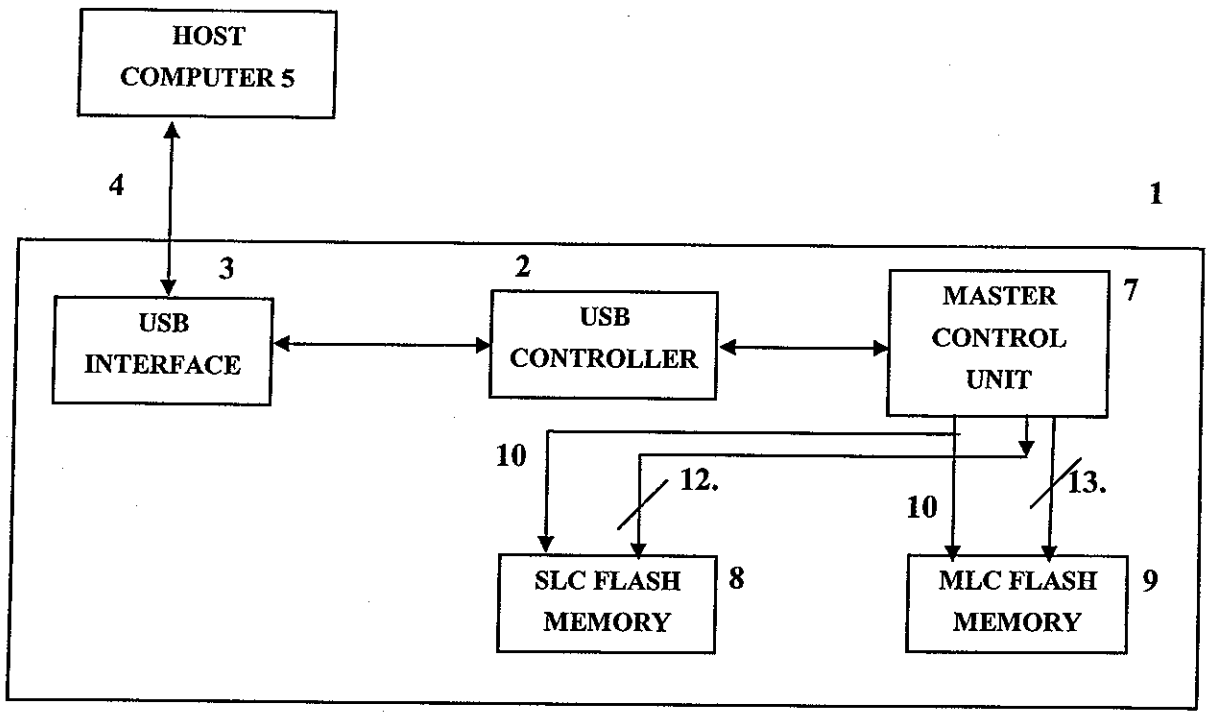

Figure 3

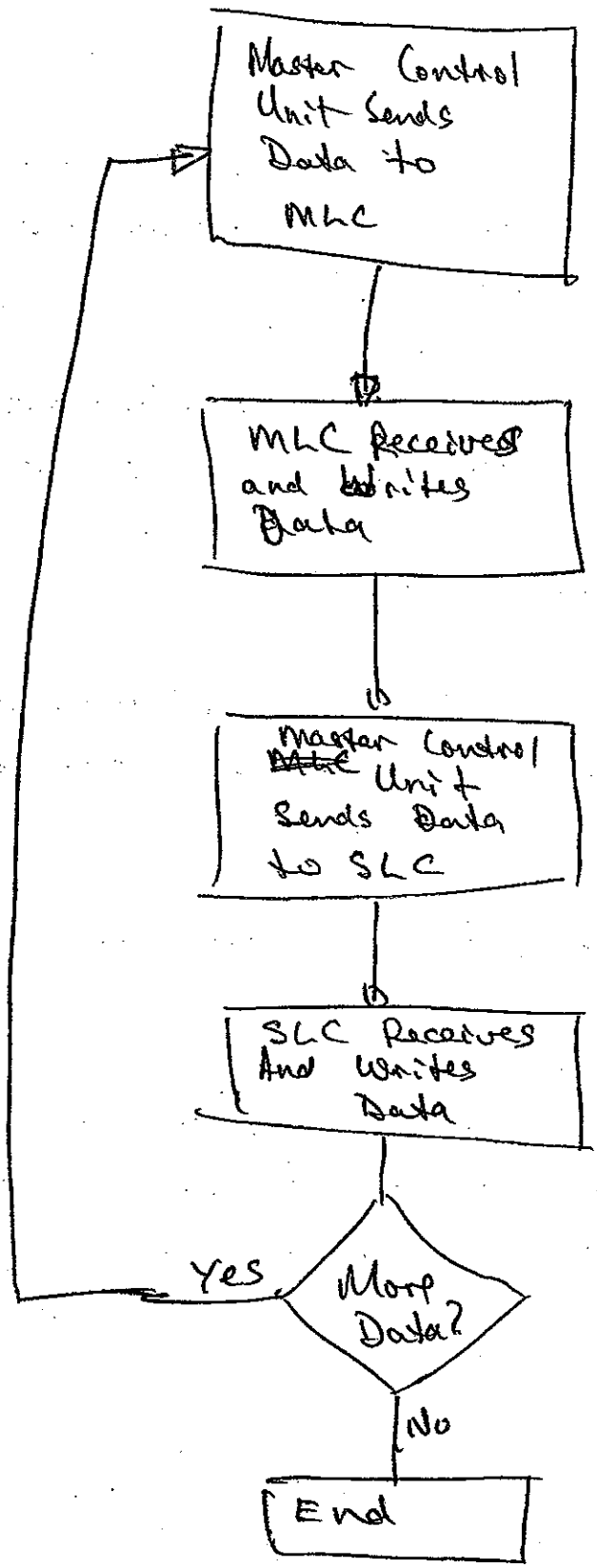
Master Control Unit Sends Data to MLC
MLC Receives and Writes Data
Master Control Unit Sends Data to SLC
SLC Receives And Writes Data
More Data?
Yes
No
End

Figure 2.

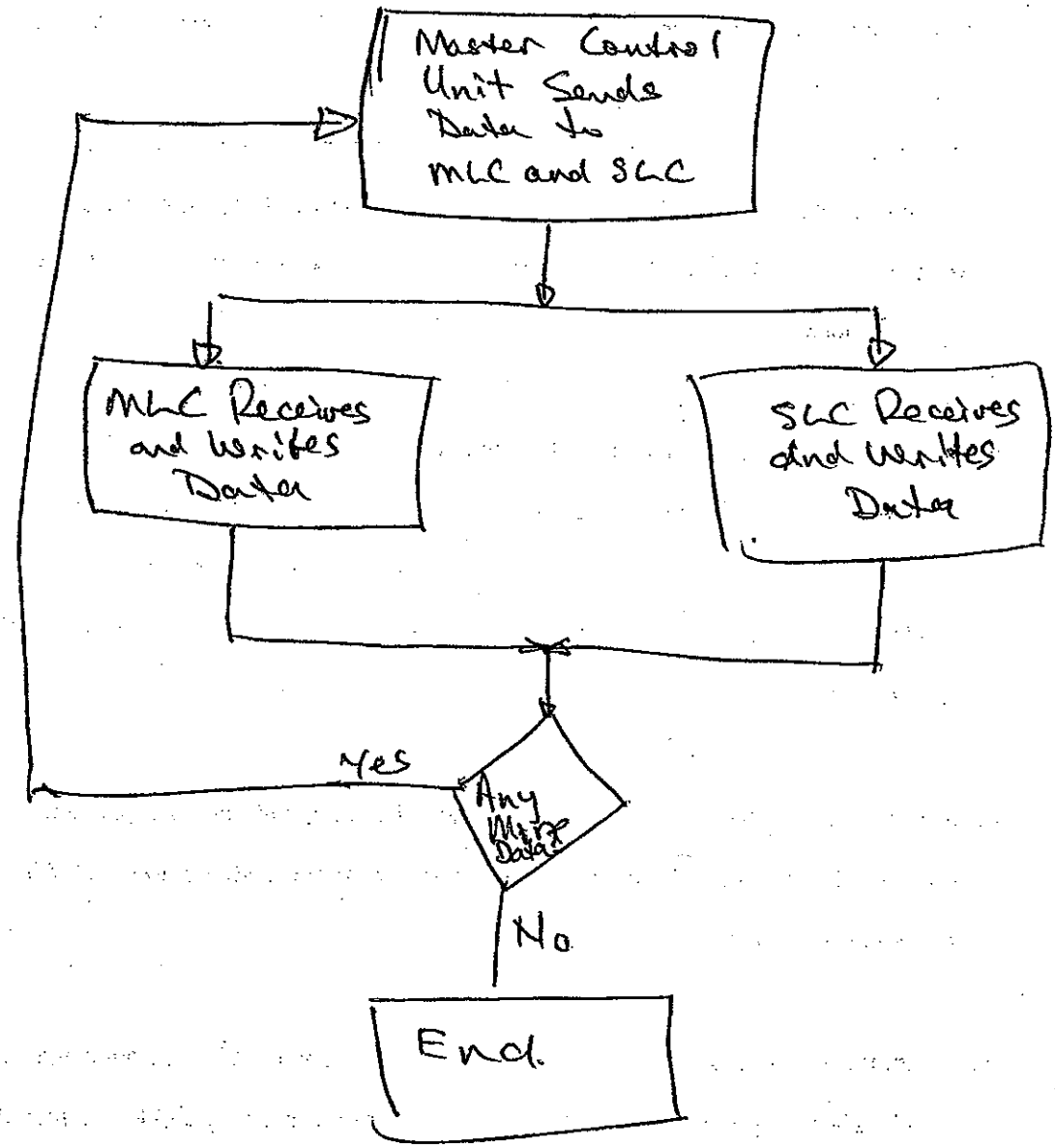
Master Control Unit Sends Data to MLC and SLC
MLC Receives and Writes Data
SLC Receives and Writes Data
Yes
Any More Data?
No
End.

Figure 4