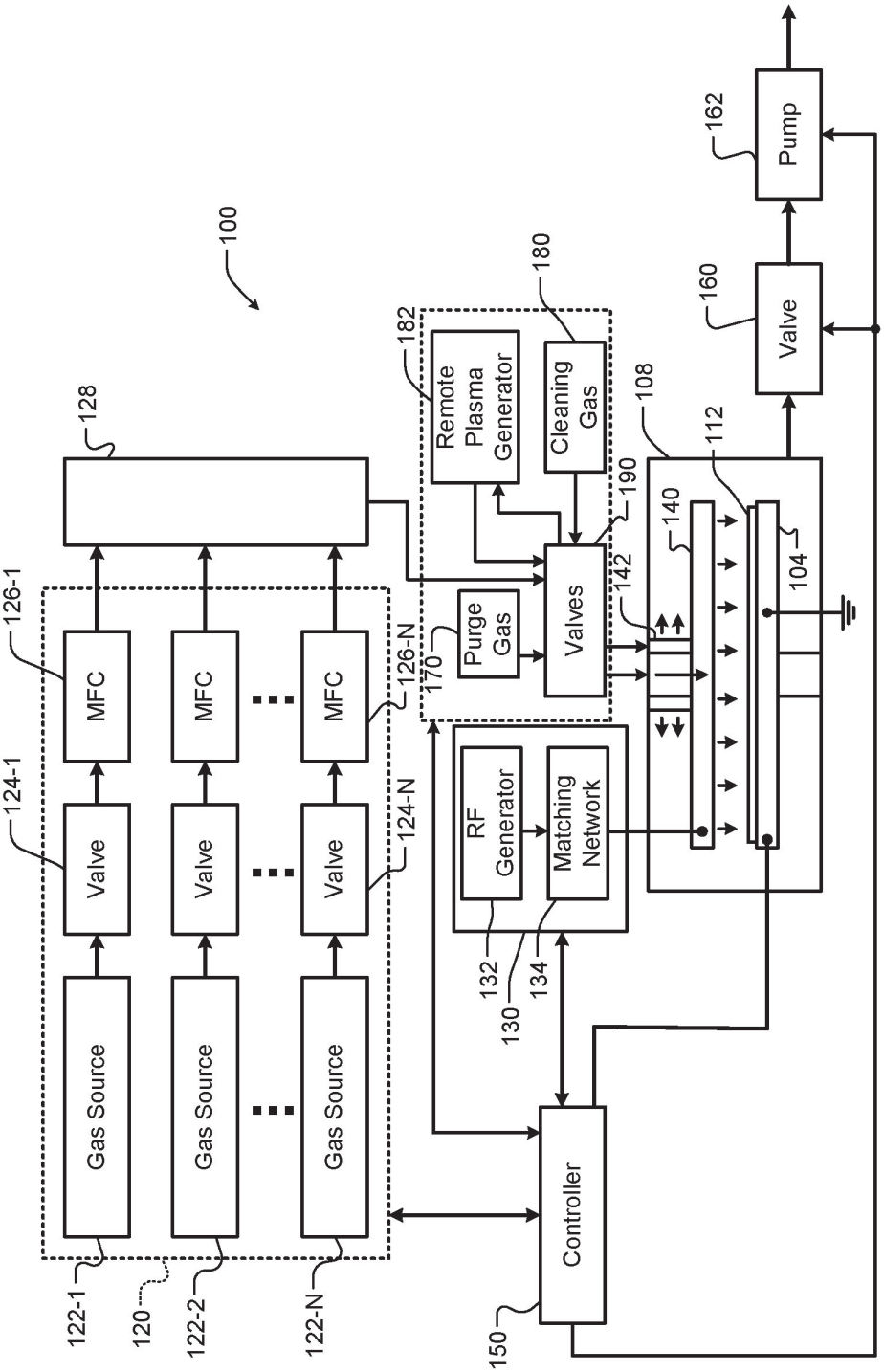
100
128
126-1
126-N
124-1
124-N
MFC
MFC
MFC
Valve
Valve
Valve
Gas Source
Gas Source
Gas Source
122-1
120
122-2
122-N
150
Controller
RF Generator
Matching Network
132
130
134
180
182
Remote Plasma Generator
Cleaning Gas
190
Purge Gas
170
Valves
142
140
108
112
104
160
Valve
162
Pump

FIG. 1

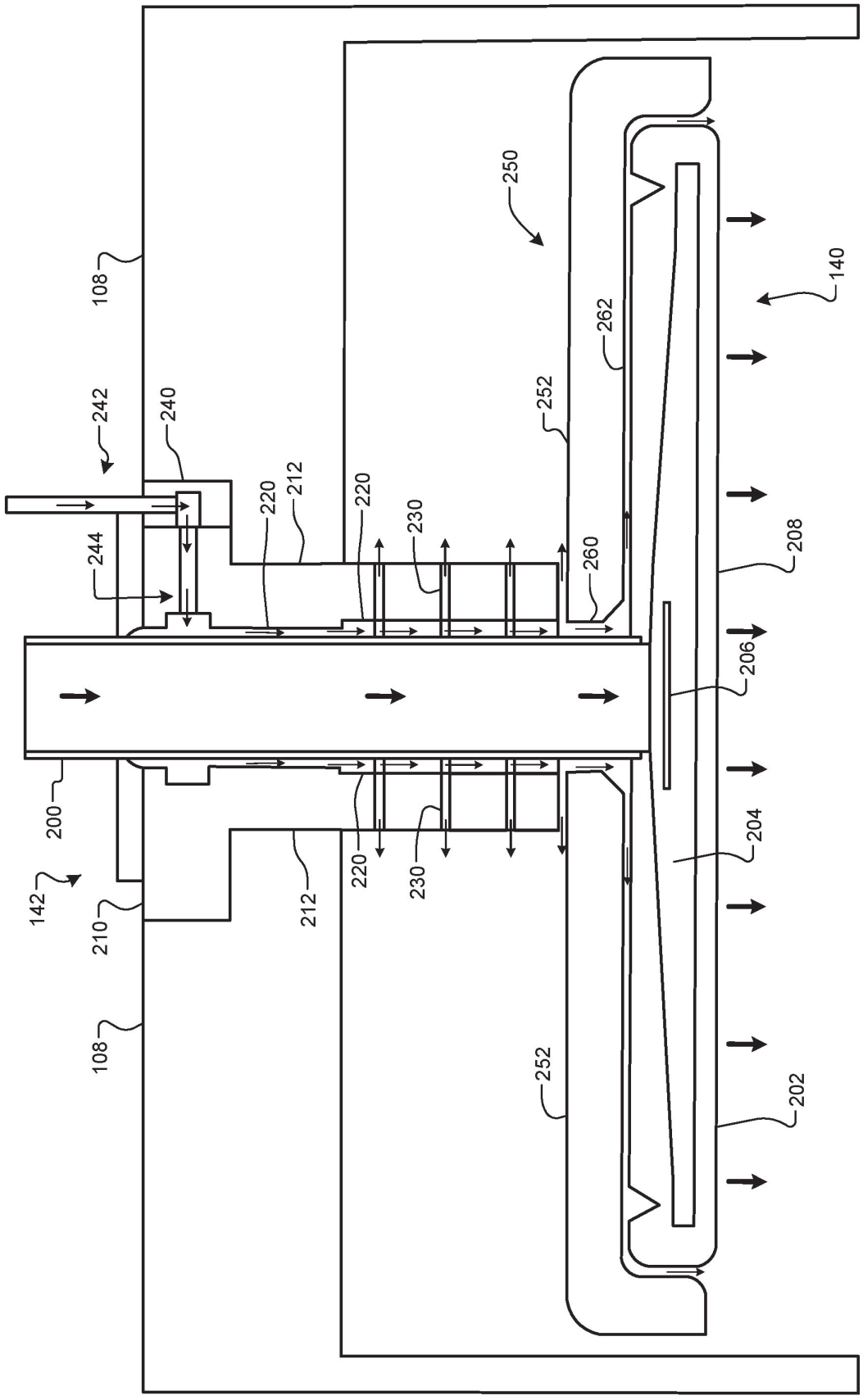
108
242
240
244
220
212
220
230
250
252
262
260
140
208
206
200
142
210
212
220
230
204
108
252
202

FIG. 2

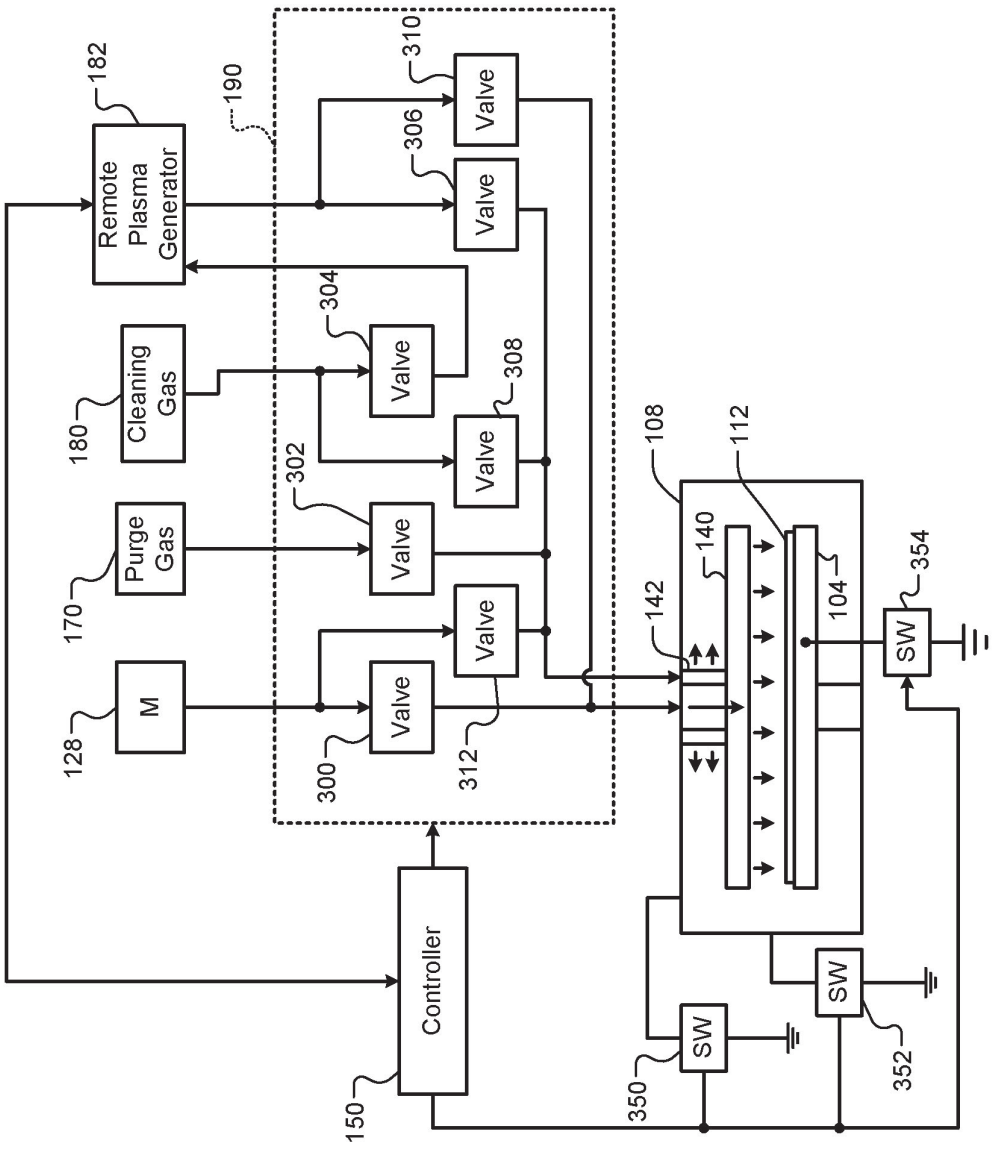
Remote Plasma Generator
182
190
310
Valve
306
Valve
304
Valve
Cleaning Gas
180
308
Valve
302
Valve
Purge Gas
170
Valve
M
128
Valve
300
Valve
312
108
112
140
142
104
354
SW
Controller
150
SW
350
SW
352

FIG. 3

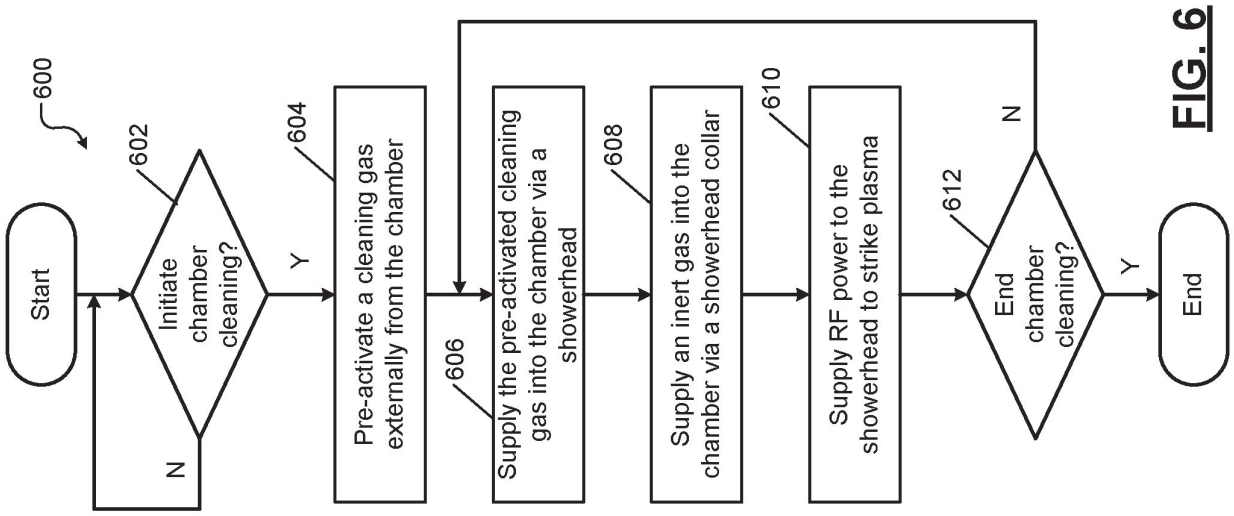

FIG. 6

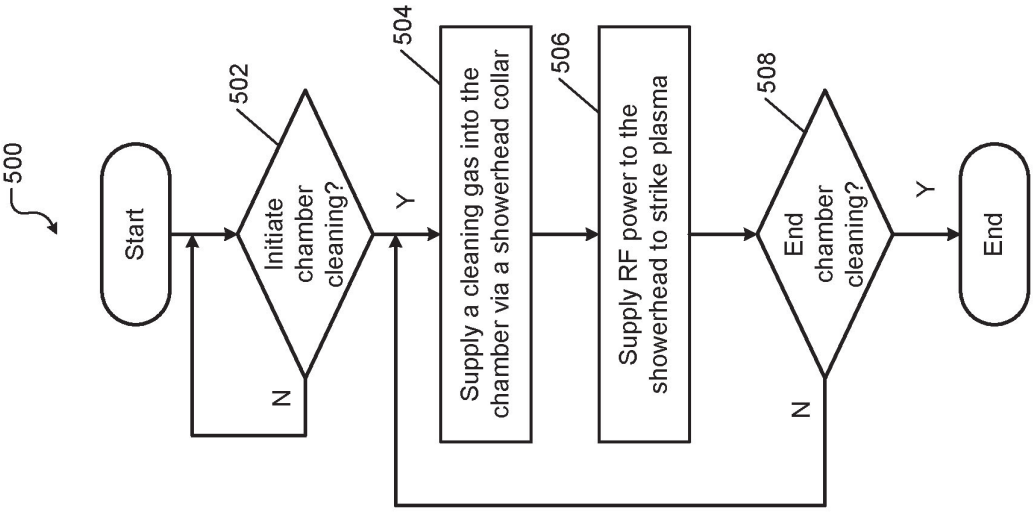

FIG. 5

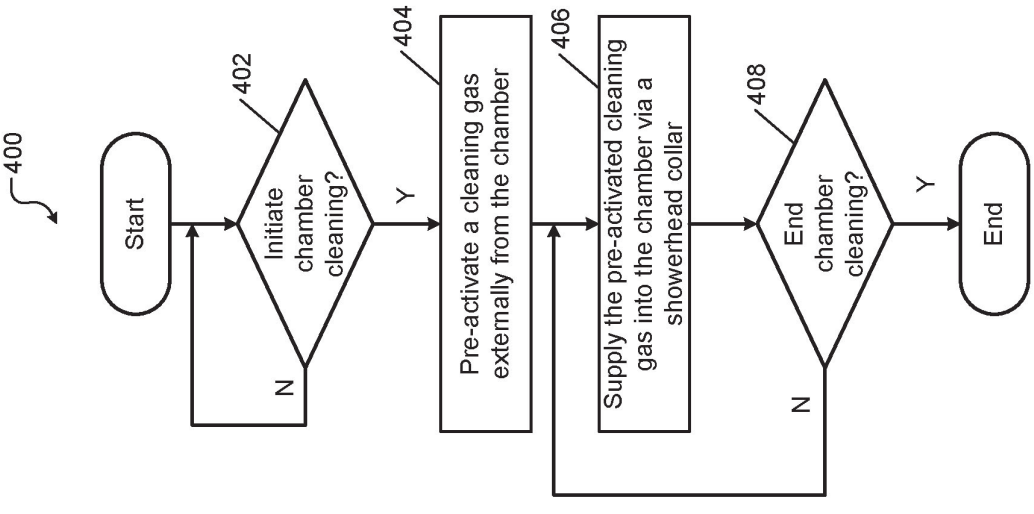

FIG. 4

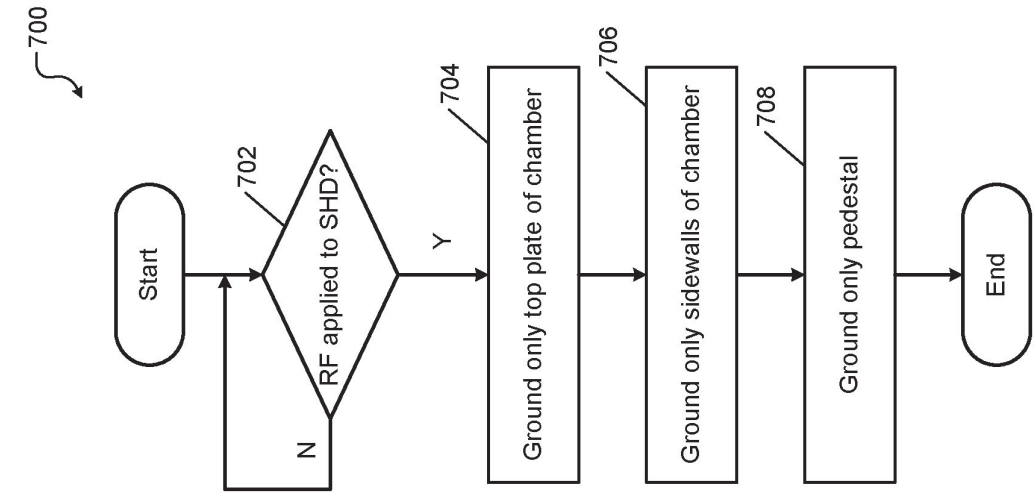
700
Start
702
RF applied to SHD?
N
Y
704
Ground only top plate of chamber
706
Ground only sidewalls of chamber
708
Ground only pedestal
End

FIG. 7

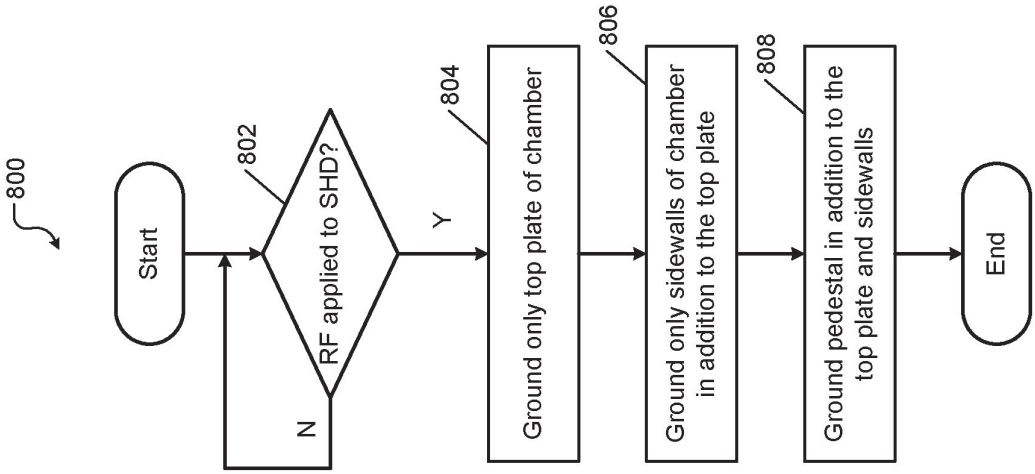
800
Start
802
RF applied to SHD?
N
Y
804
Ground only top plate of chamber
806
Ground only sidewalls of chamber in addition to the top plate
808
Ground pedestal in addition to the top plate and sidewalls
End

FIG. 8

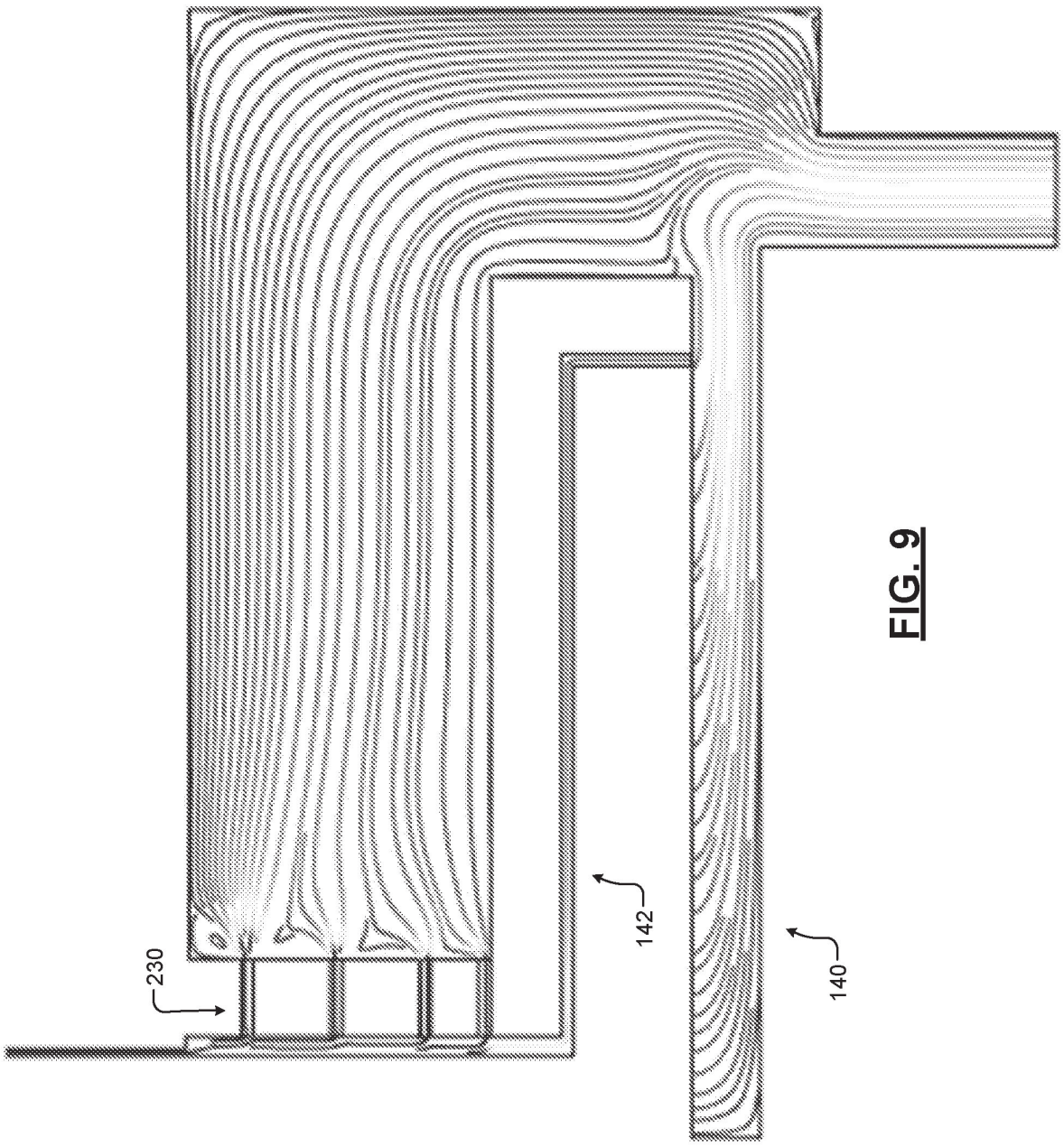

FIG. 9

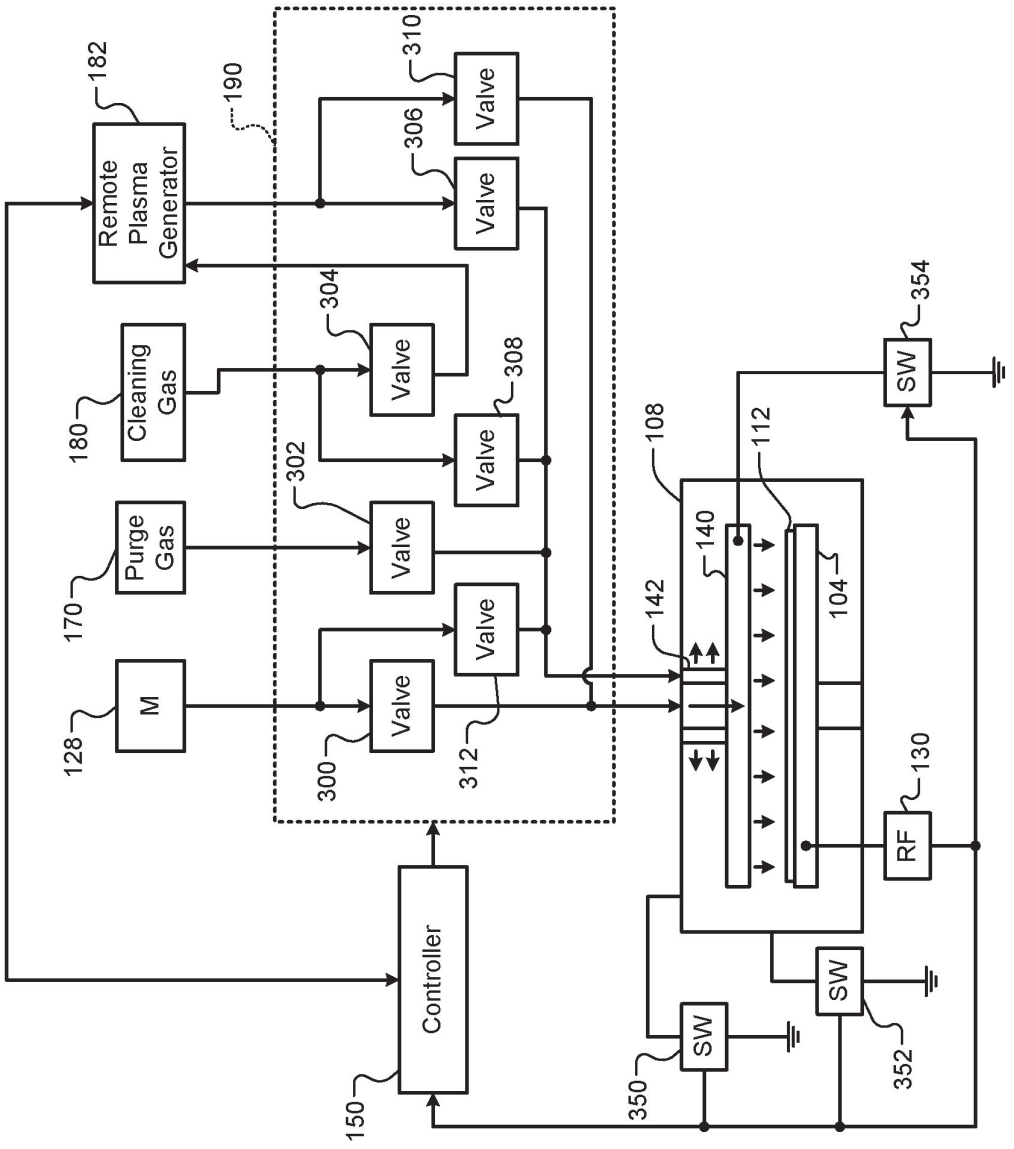
Remote Plasma Generator
182
190
Cleaning Gas
180
Purge Gas
170
M
128
Valve
300
302
304
306
308
310
312
Controller
150
108
112
140
142
104
SW
354
RF
130
SW
352
SW
350

FIG. 10