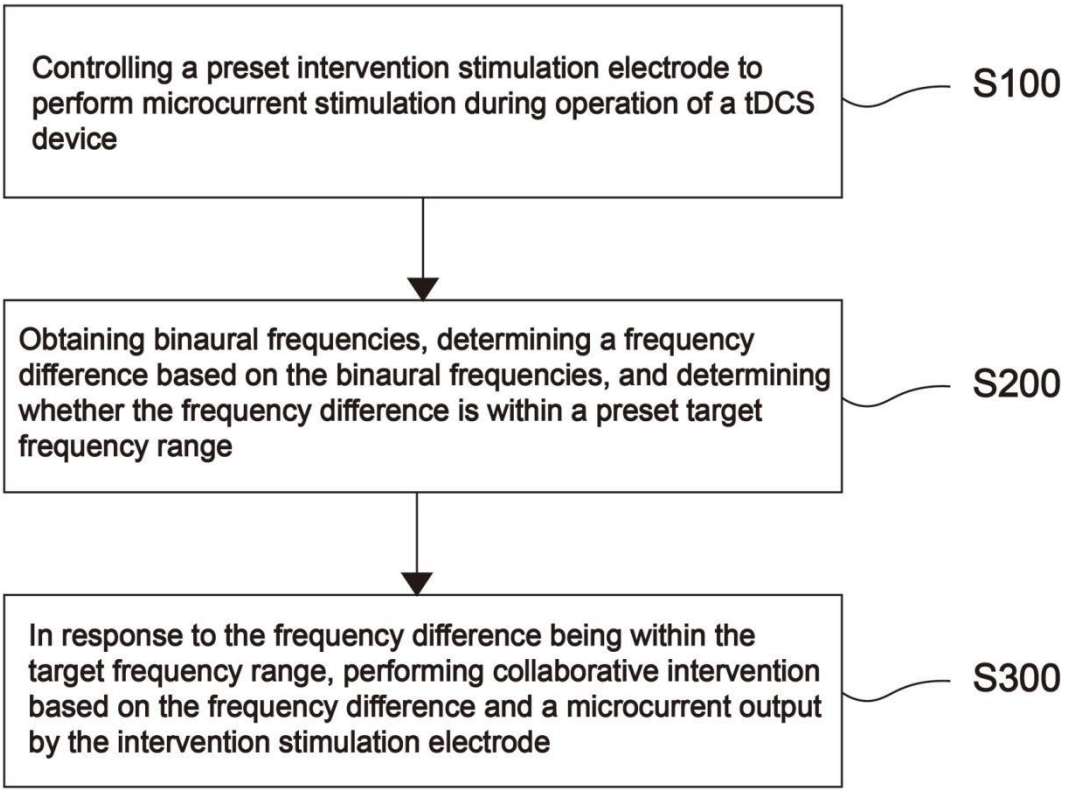
Controlling a preset intervention stimulation electrode to perform microcurrent stimulation during operation of a tDCS device
S100
Obtaining binaural frequencies, determining a frequency difference based on the binaural frequencies, and determining whether the frequency difference is within a preset target frequency range
S200
In response to the frequency difference being within the target frequency range, performing collaborative intervention based on the frequency difference and a microcurrent output by the intervention stimulation electrode
S300

FIG. 1

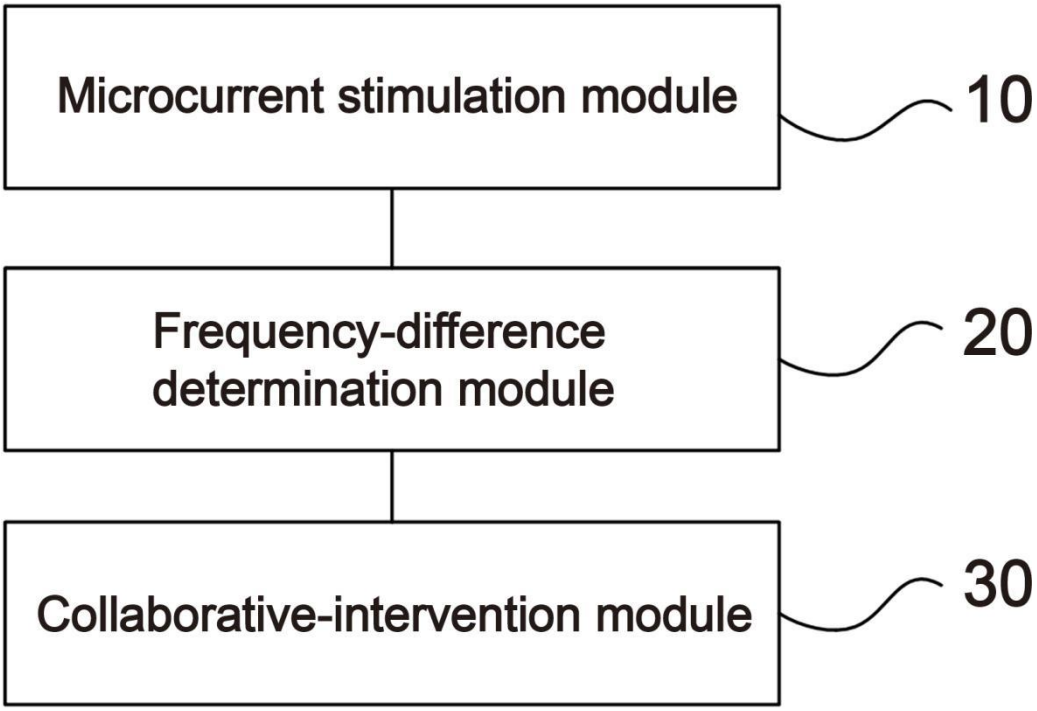
Microcurrent stimulation module
10
Frequency-difference determination module
20
Collaborative-intervention module
30

FIG. 2

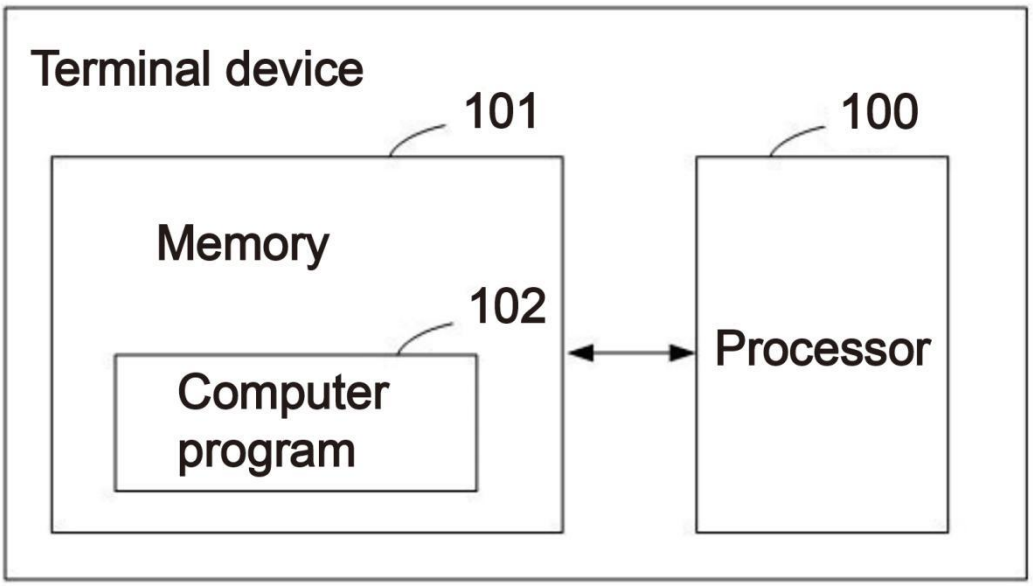
Terminal device
101
100
Memory
102
Computer program
Processor

FIG. 3