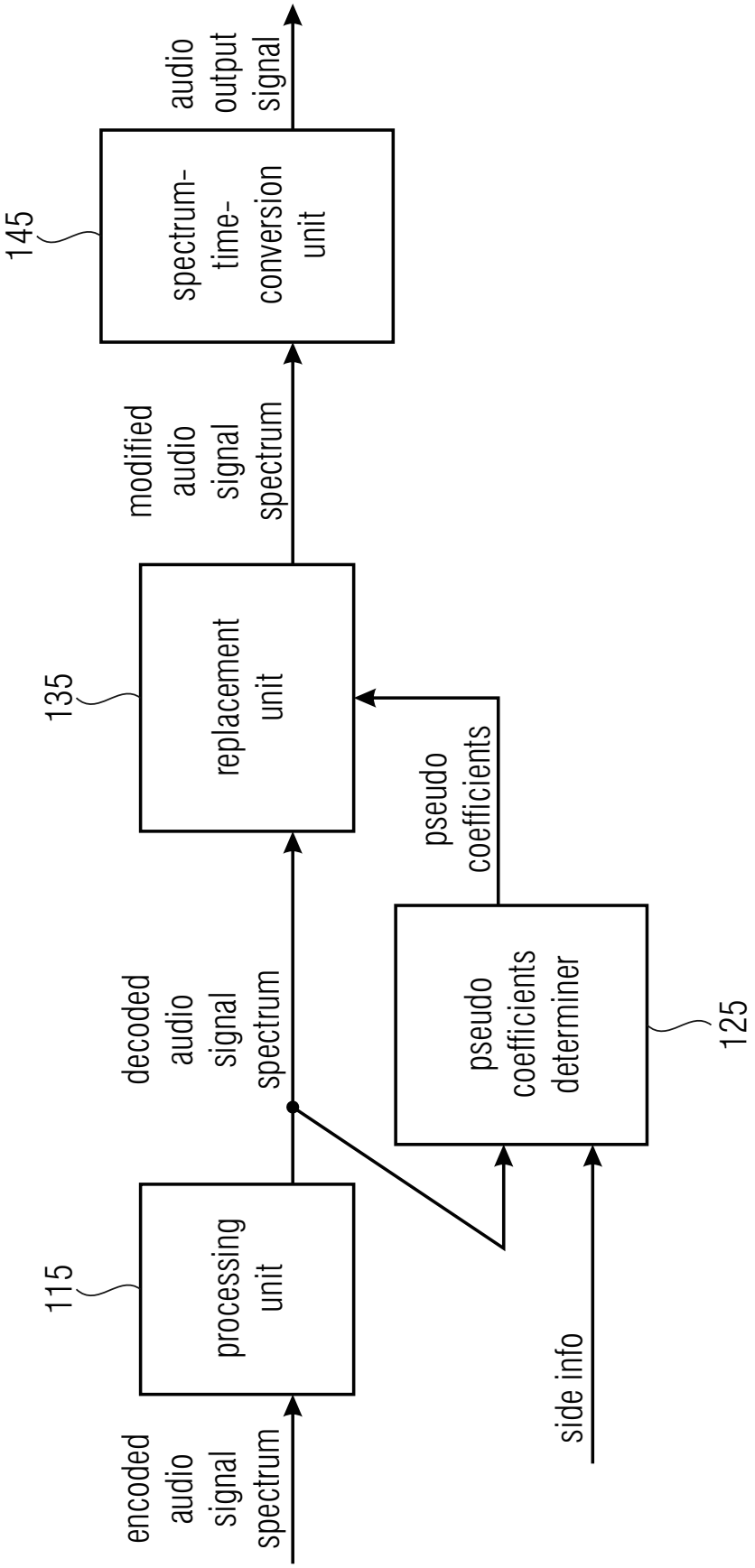
encoded audio signal spectrum
side info
115
processing unit
125
pseudo coefficients determiner
pseudo coefficients
decoded audio signal spectrum
135
replacement unit
modified audio signal spectrum
145
spectrum-time-conversion unit
audio output signal

FIG 1A

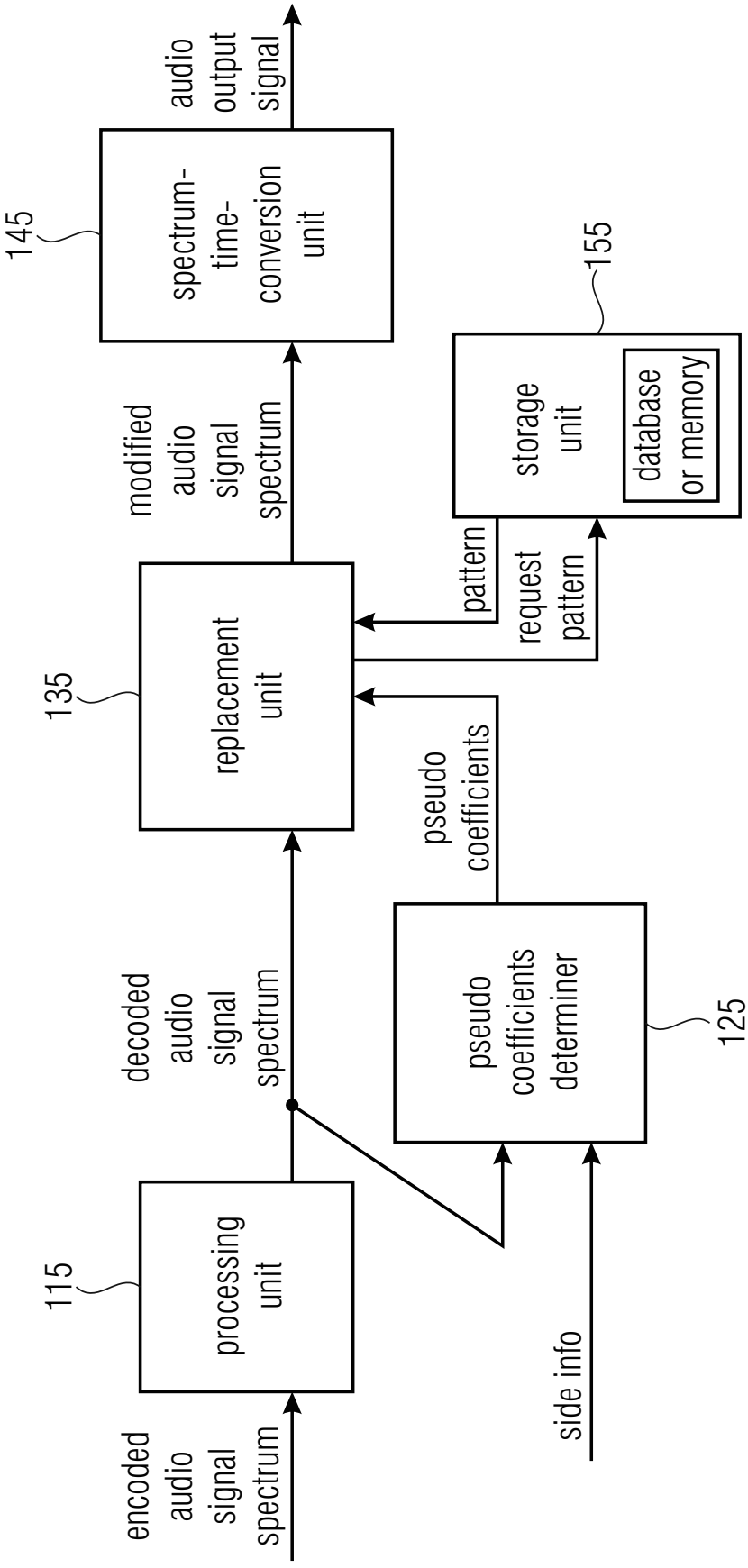
encoded audio signal spectrum
115
processing unit
decoded audio signal spectrum
side info
pseudo coefficients determiner
125
pseudo coefficients
135
replacement unit
pattern request pattern
155
storage unit
database or memory
modified audio signal spectrum
145
spectrum-time-conversion unit
audio output signal

FIG 1B

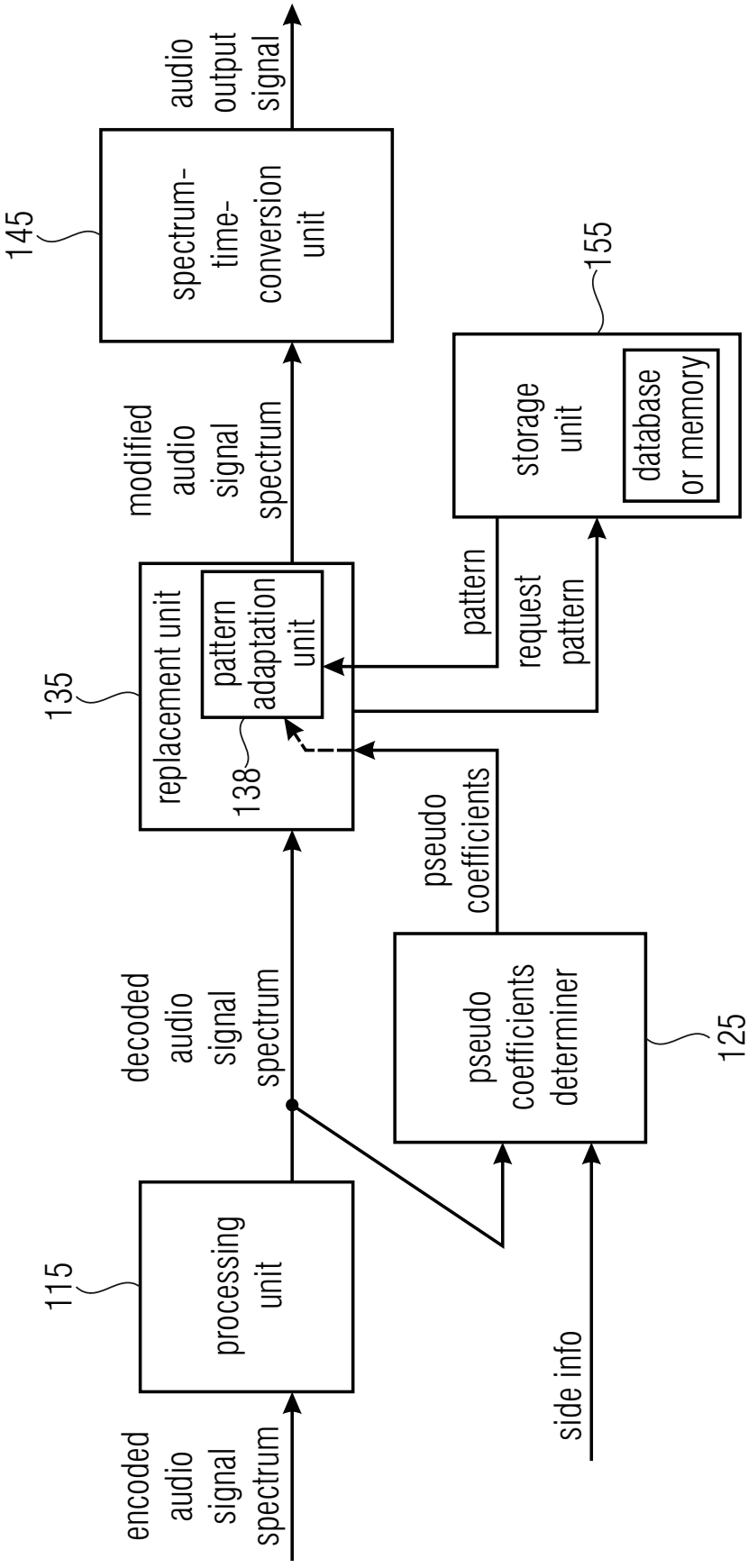
encoded audio signal spectrum
side info
115
processing unit
decoded audio signal spectrum
pseudo coefficients determiner
125
pseudo coefficients
135
replacement unit
pattern adaptation unit
138
pattern
request pattern
storage unit
database or memory
155
modified audio signal spectrum
145
spectrum-time-conversion unit
audio output signal

FIG 1C

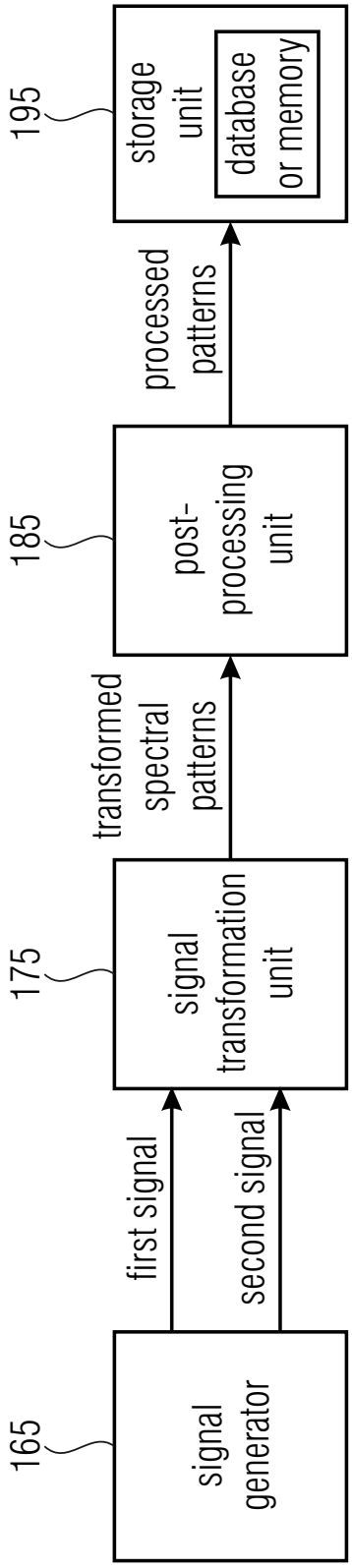
165
signal generator
first signal
second signal
175
signal transformation unit
transformed spectral patterns
185
post-processing unit
processed patterns
195
storage unit
database or memory

FIG 1D

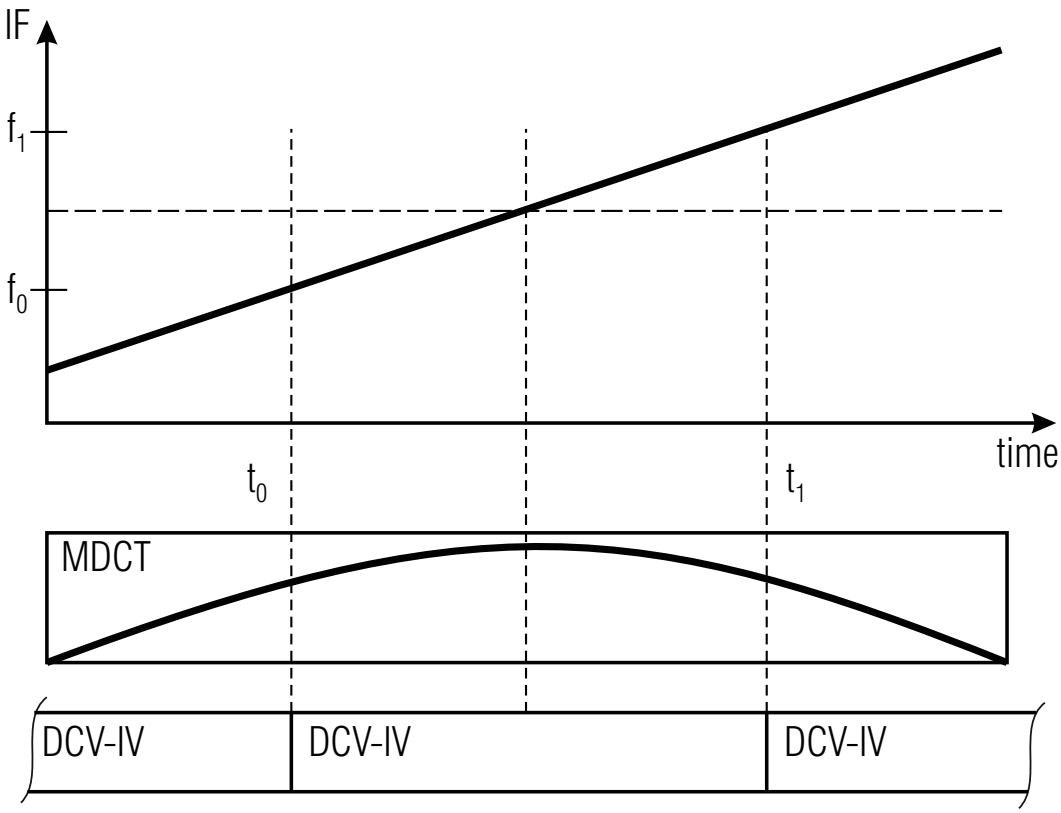

FIG 2

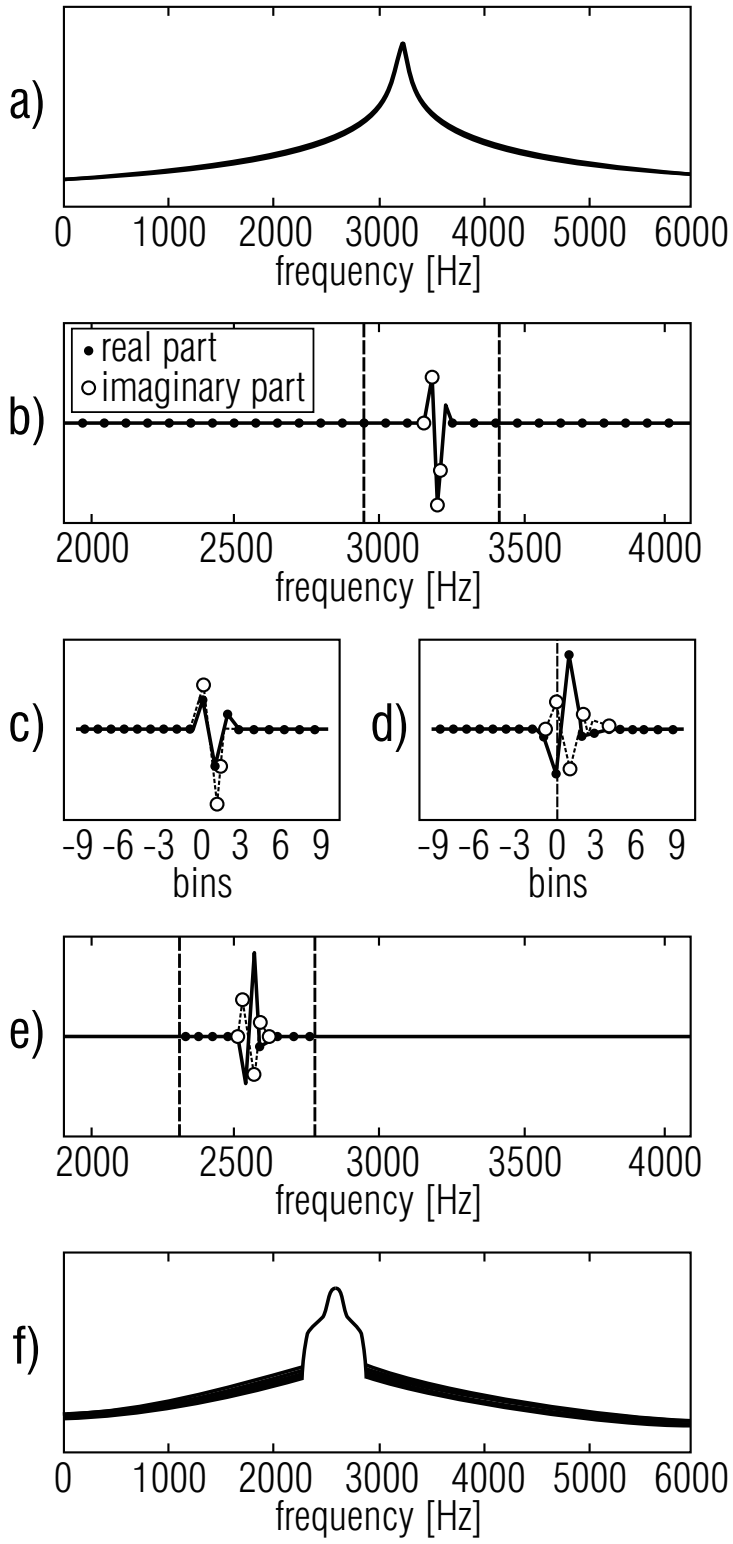
a)
0 1000 2000 3000 4000 5000 6000
frequency [Hz]
b)
real part
imaginary part
2000 2500 3000 3500 4000
frequency [Hz]
c)
-9 -6 -3 0 3 6 9
bins
d)
-9 -6 -3 0 3 6 9
bins
e)
2000 2500 3000 3500 4000
frequency [Hz]
f)
0 1000 2000 3000 4000 5000 6000
frequency [Hz]

FIG 3

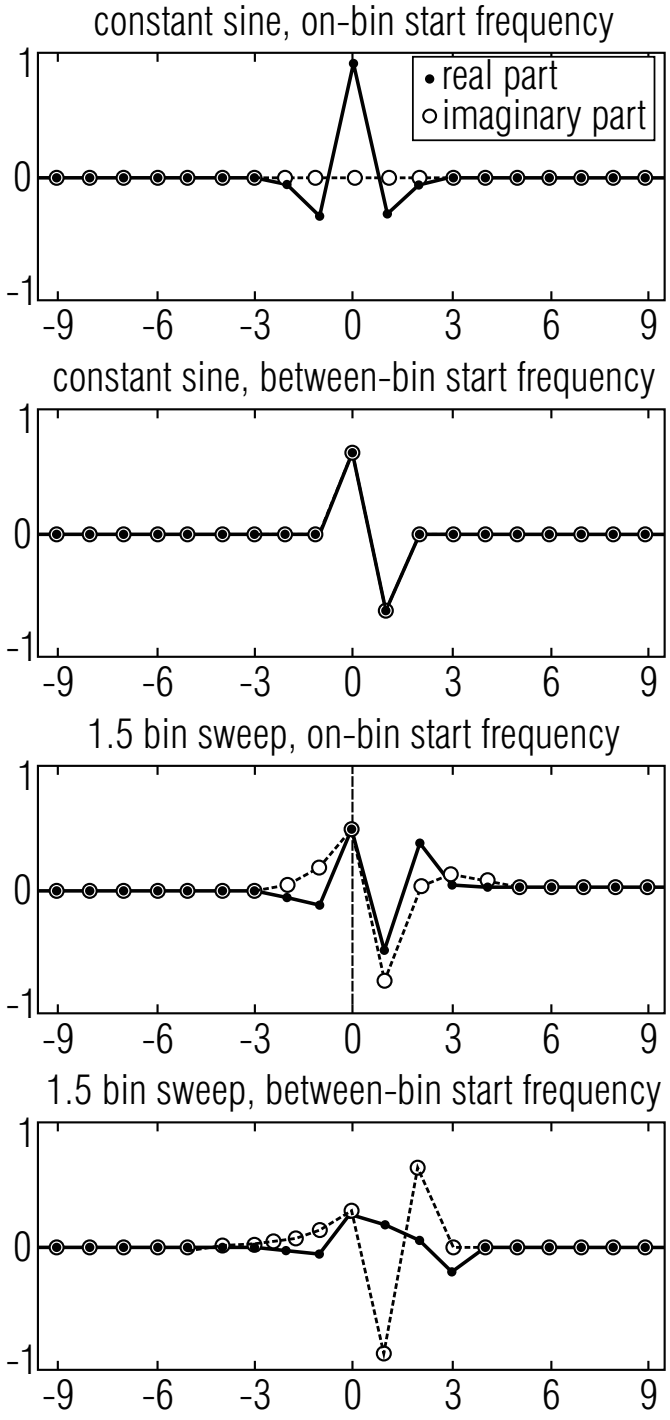
constant sine, on-bin start frequency
real part
imaginary part
1
0
-1
-9
-6
-3
0
3
6
9
constant sine, between-bin start frequency
1.5 bin sweep, on-bin start frequency
1.5 bin sweep, between-bin start frequency

FIG 4

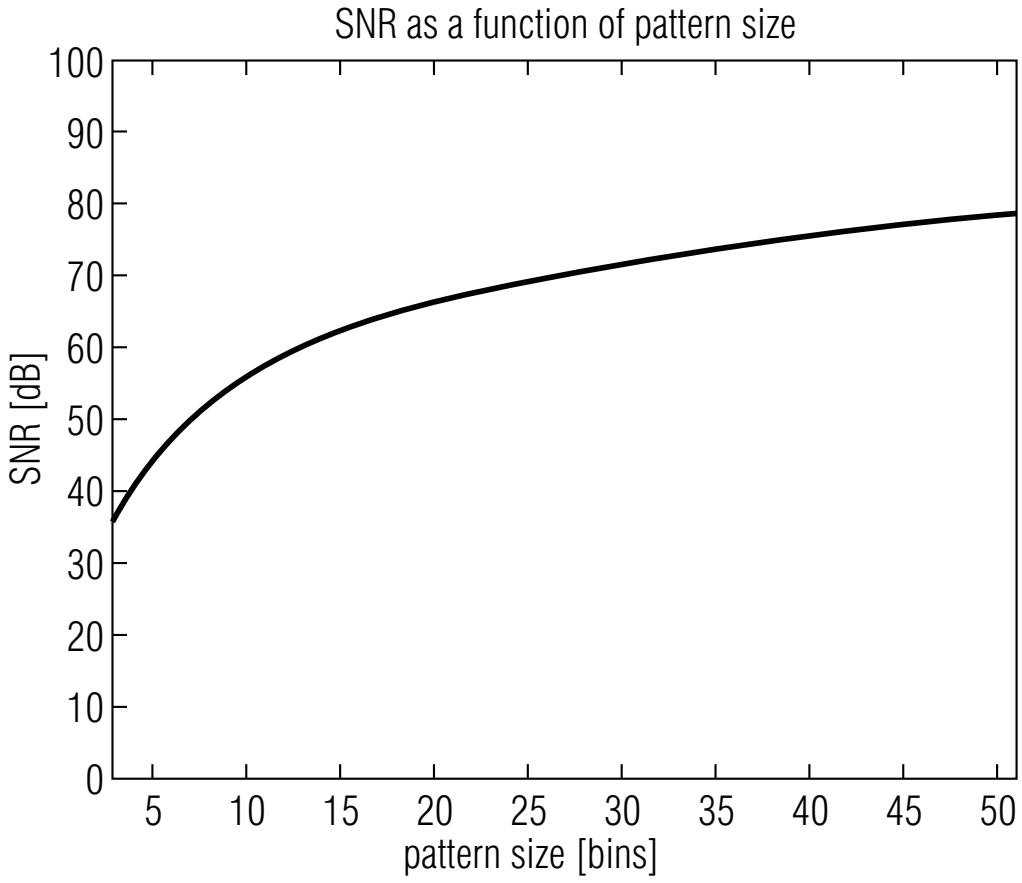
SNR as a function of pattern size
SNR [dB]
100
90
80
70
60
50
40
30
20
10
0
5
10
15
20
25
30
35
40
45
50
pattern size [bins]

FIG 5

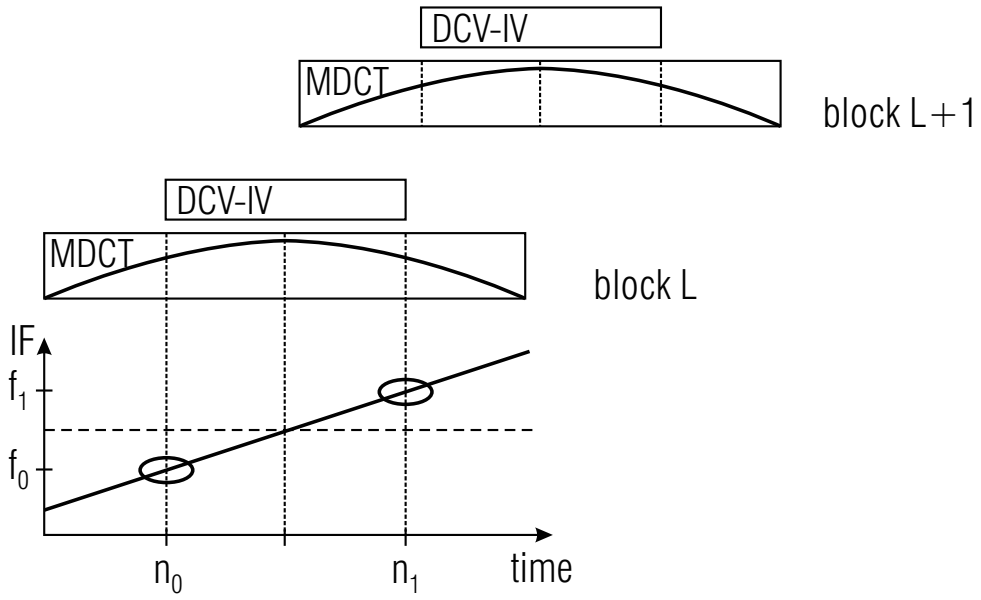

FIG 6A

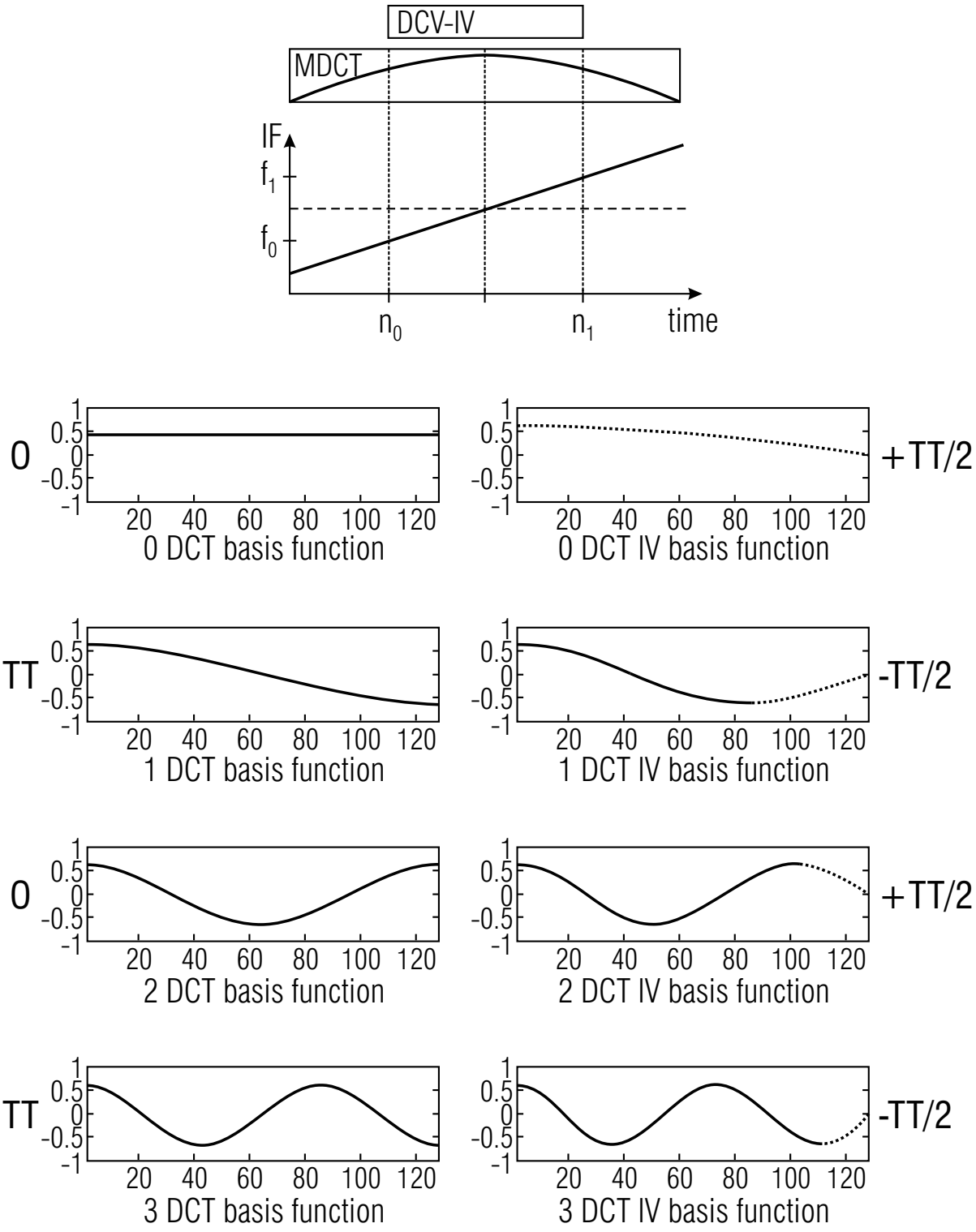
DCV-IV
MDCT
IF
f_1
f_0
n_0
n_1
time
0
+TT/2
0 DCT basis function
0 DCT IV basis function
TT
-TT/2
1 DCT basis function
1 DCT IV basis function
0
+TT/2
2 DCT basis function
2 DCT IV basis function
TT
-TT/2
3 DCT basis function
3 DCT IV basis function

FIG 6B

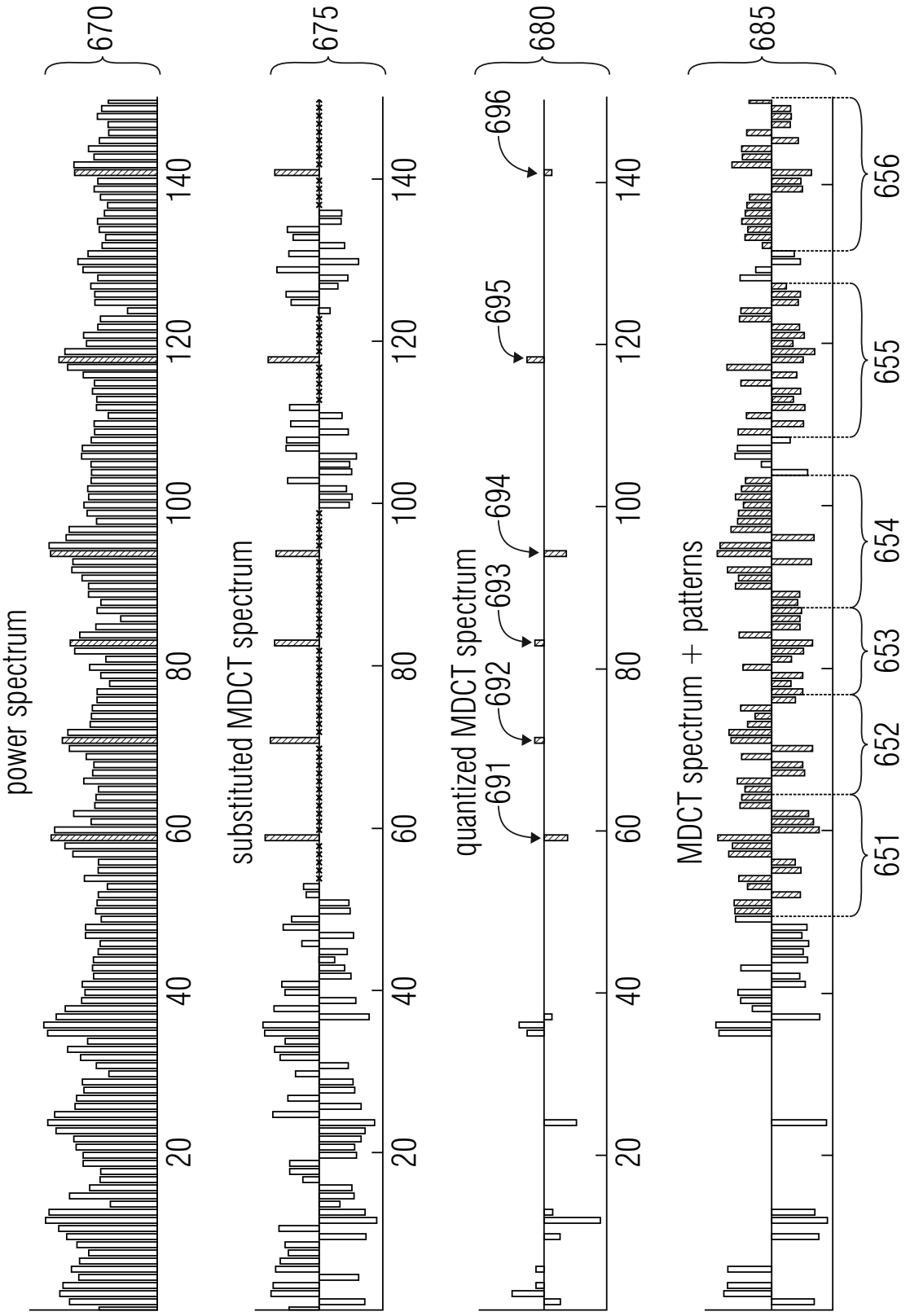
power spectrum
670
substituted MDCT spectrum
675
quantized MDCT spectrum
680
691
692
693
694
695
696
MDCT spectrum + patterns
685
651
652
653
654
655
656
20
40
60
80
100
120
140

FIG 6C

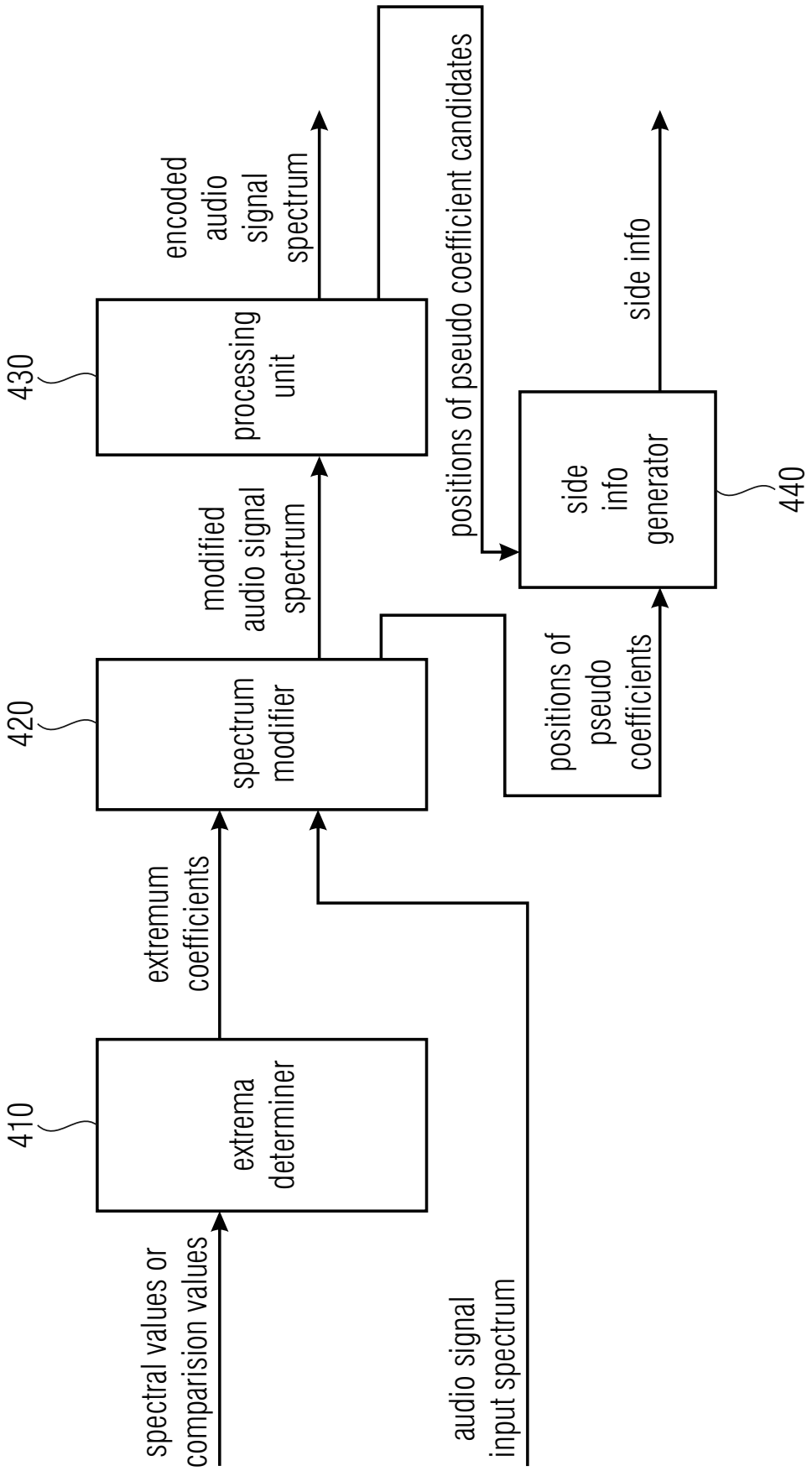
spectral values or comparision values
audio signal input spectrum
410
extrema determiner
extremum coefficients
420
spectrum modifier
modified audio signal spectrum
positions of pseudo coefficients
430
processing unit
encoded audio signal spectrum
positions of pseudo coefficient candidates
440
side info generator
side info

FIG 7

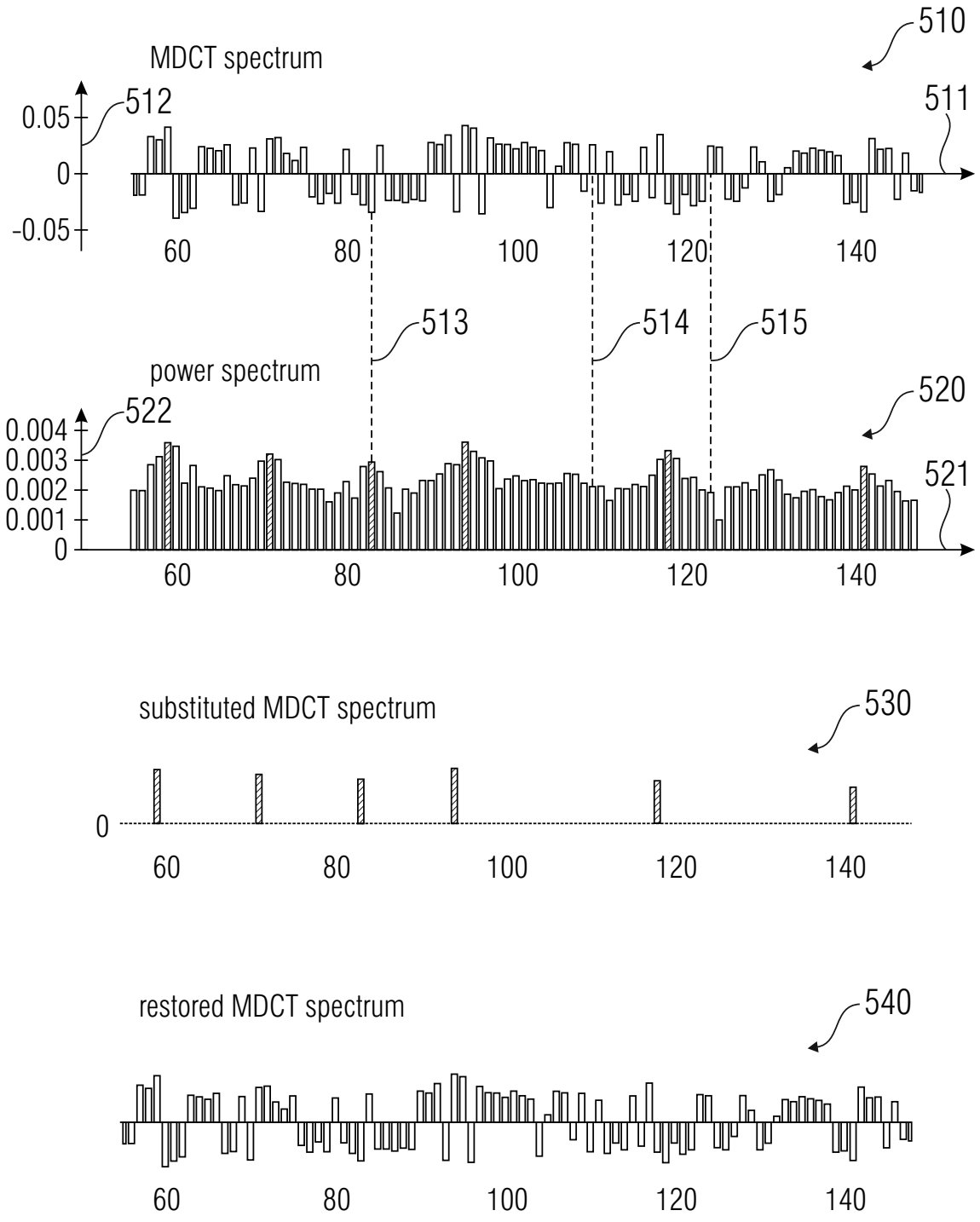
MDCT spectrum
510
512
511
0.05
0
-0.05
60
80
100
120
140
513
514
515
power spectrum
522
520
521
0.004
0.003
0.002
0.001
0
60
80
100
120
140
substituted MDCT spectrum
530
0
60
80
100
120
140
restored MDCT spectrum
540
60
80
100
120
140

FIG 8

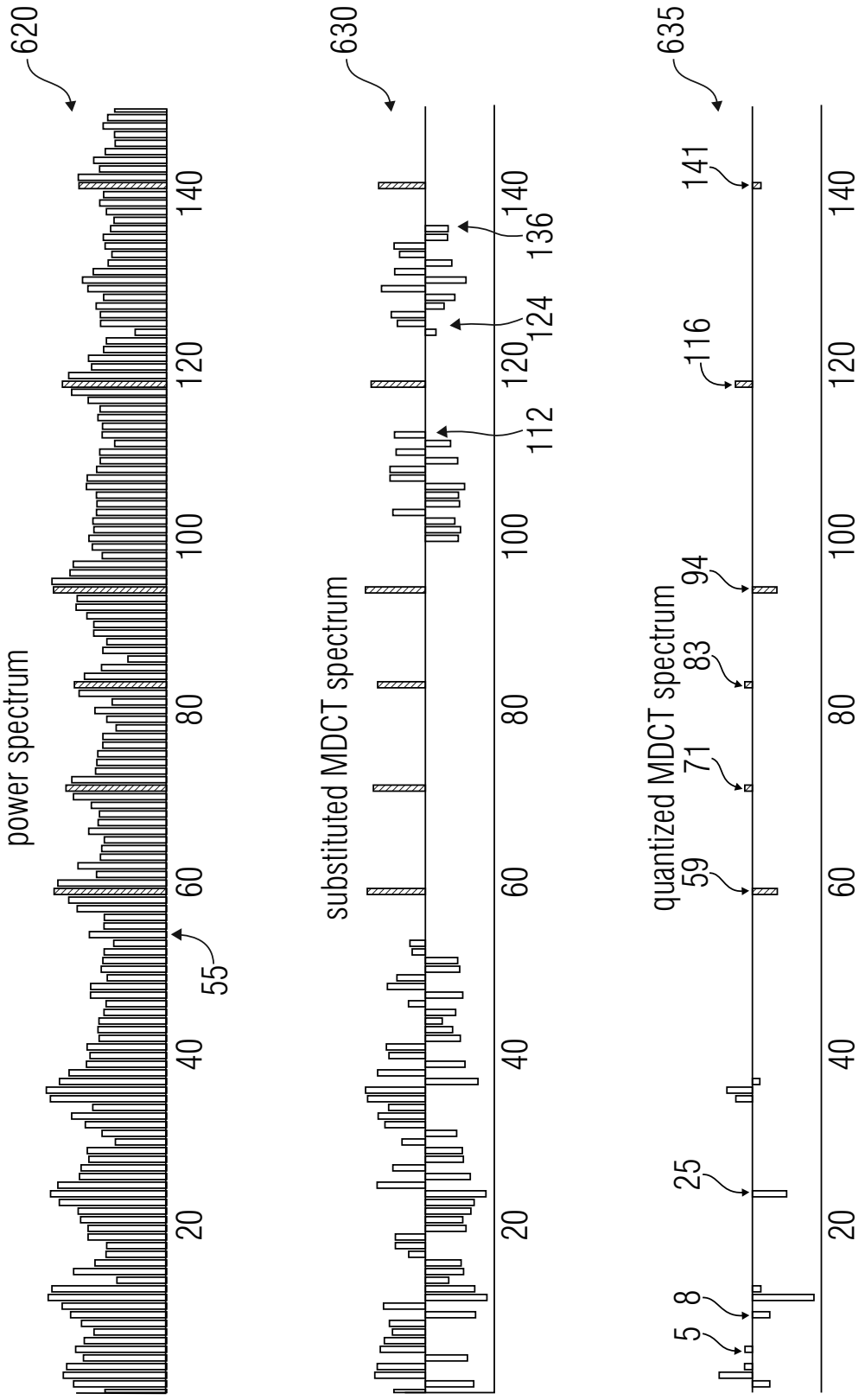
620
power spectrum
20
40
55
60
80
100
120
140
630
substituted MDCT spectrum
20
40
60
80
100
112
120
124
136
140
635
quantized MDCT spectrum
5
8
25
59
71
83
94
116
141
20
40
60
80
100
120
140

FIG 9

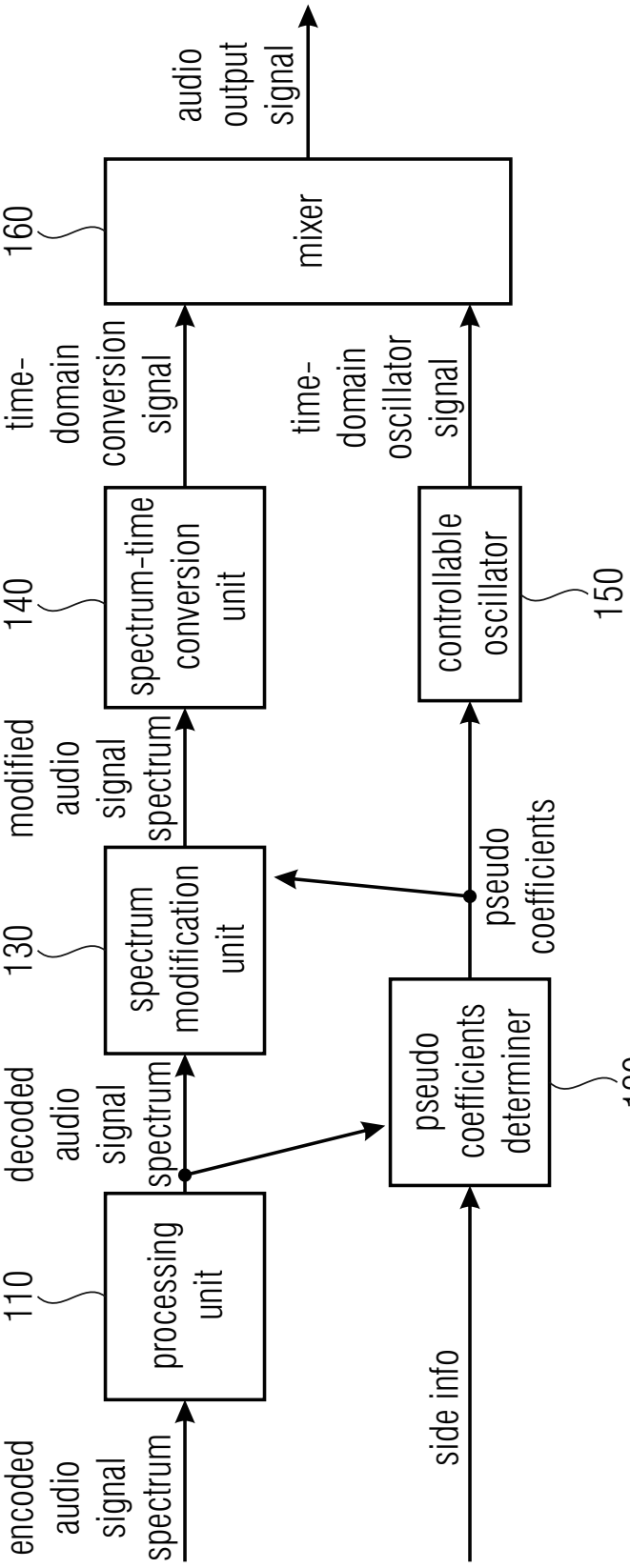
encoded audio signal spectrum
side info
110
processing unit
decoded audio signal spectrum
120
pseudo coefficients determiner
130
spectrum modification unit
modified audio signal spectrum
pseudo coefficients
140
spectrum-time conversion unit
150
controllable oscillator
time-domain conversion signal
time-domain oscillator signal
160
mixer
audio output signal

FIG 10

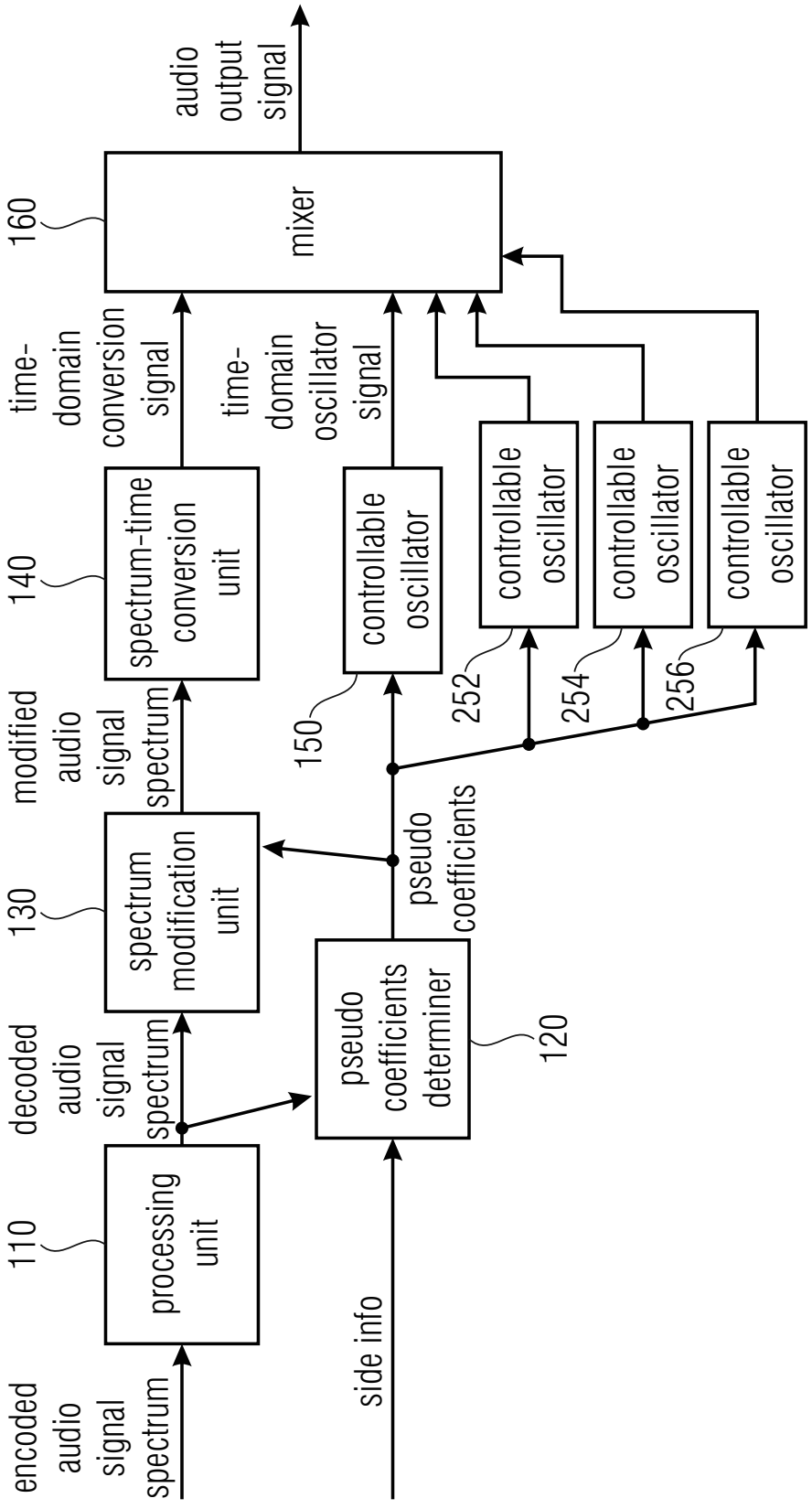
encoded audio signal spectrum
110
processing unit
decoded audio signal spectrum
130
spectrum modification unit
modified audio signal spectrum
140
spectrum-time conversion unit
time-domain conversion signal
160
mixer
audio output signal
side info
pseudo coefficients determiner
120
pseudo coefficients
150
controllable oscillator
time-domain oscillator signal
252
controllable oscillator
254
controllable oscillator
256
controllable oscillator

FIG 11

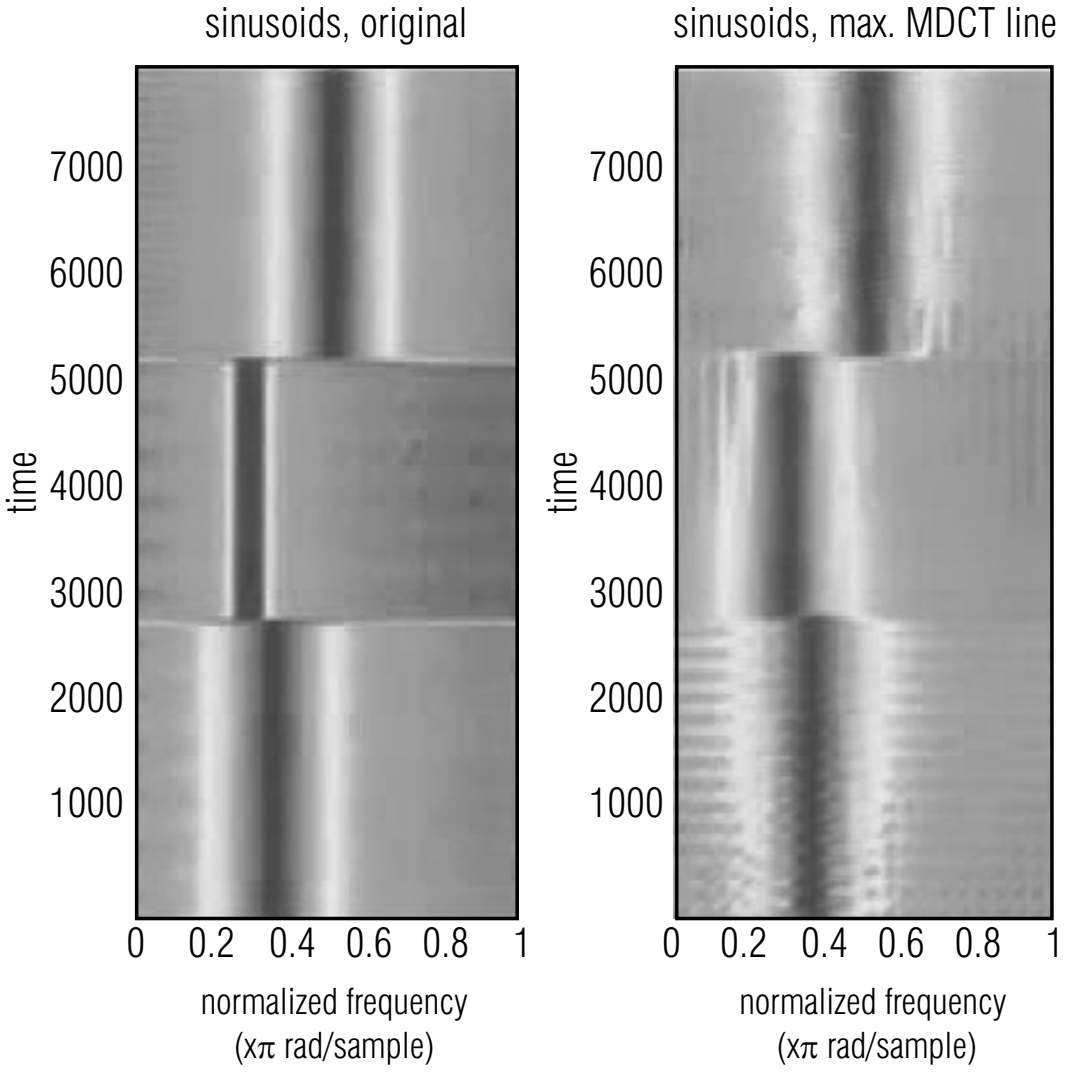
sinusoids, original
sinusoids, max. MDCT line
time
7000
6000
5000
4000
3000
2000
1000
0
0.2
0.4
0.6
0.8
1
normalized frequency
(xπ rad/sample)

FIG 12