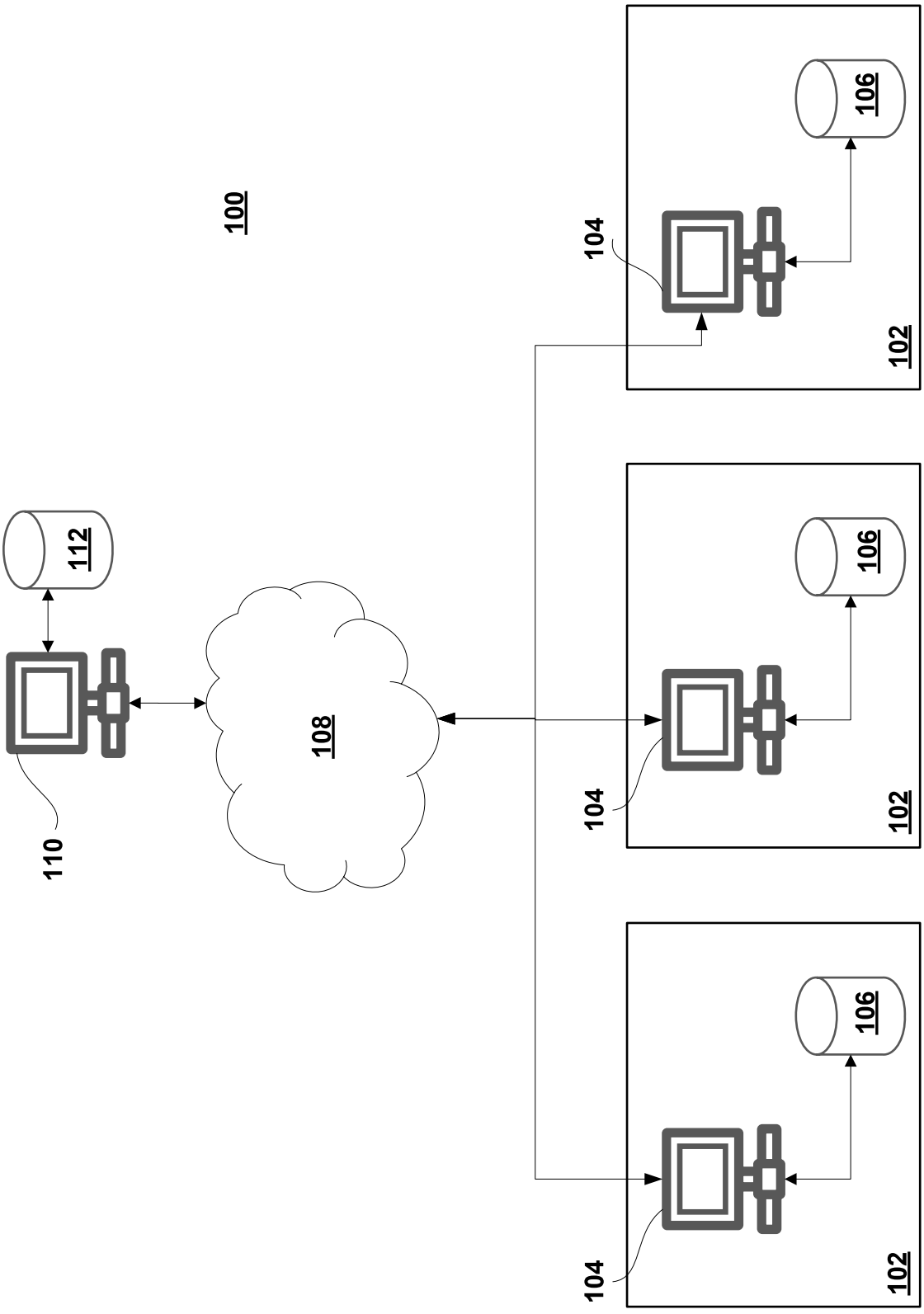

FIG. 1

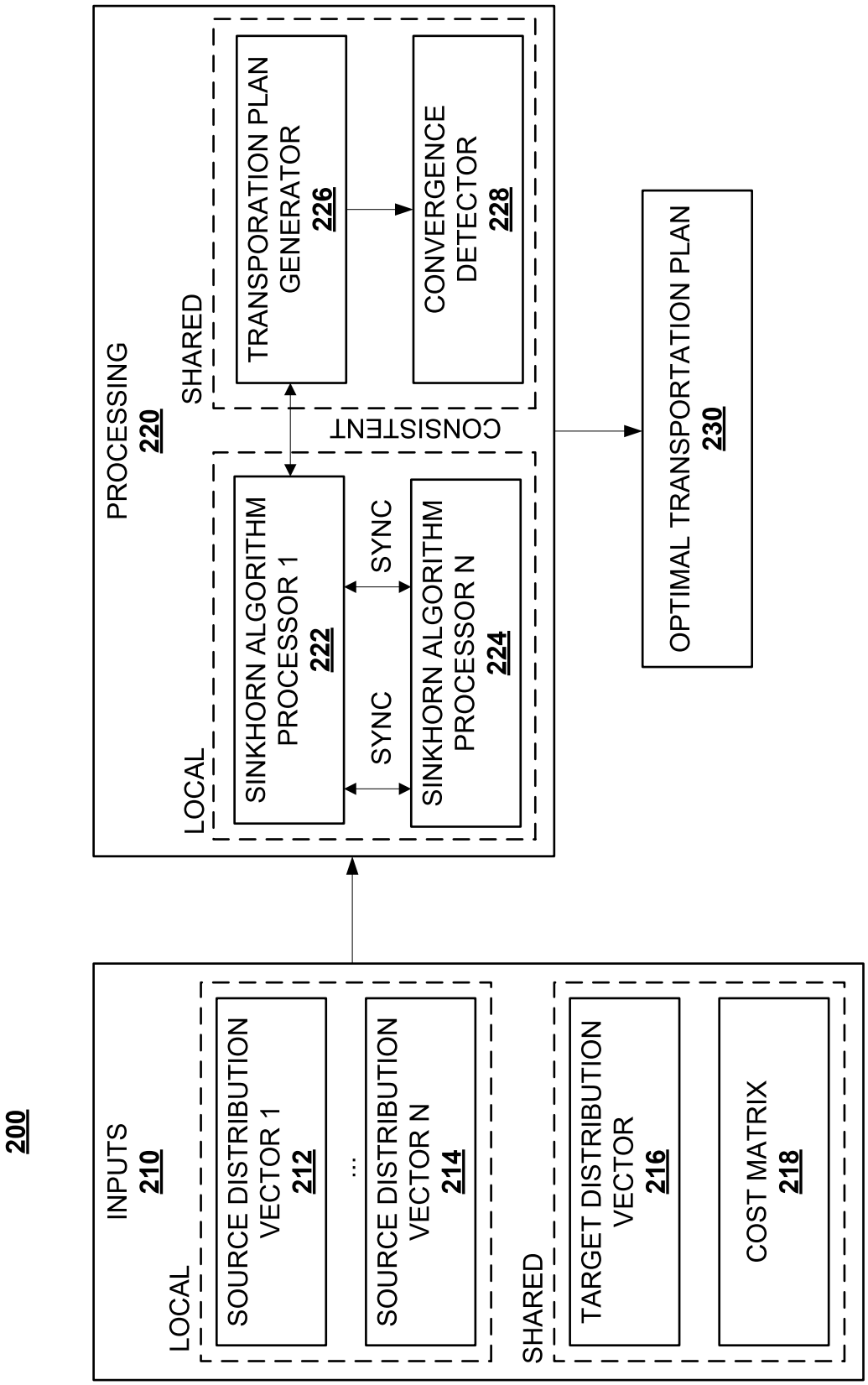
200
INPUTS
210
LOCAL
SOURCE DISTRIBUTION VECTOR 1
212
...
SOURCE DISTRIBUTION VECTOR N
214
SHARED
TARGET DISTRIBUTION VECTOR
216
COST MATRIX
218
PROCESSING
220
LOCAL
SINKHORN ALGORITHM PROCESSOR 1
222
SYNC
SYNC
SINKHORN ALGORITHM PROCESSOR N
224
SHARED
TRANSPORATION PLAN GENERATOR
226
CONVERGENCE DETECTOR
228
CONSISTENT
OPTIMAL TRANSPORTATION PLAN
230

FIG. 2A

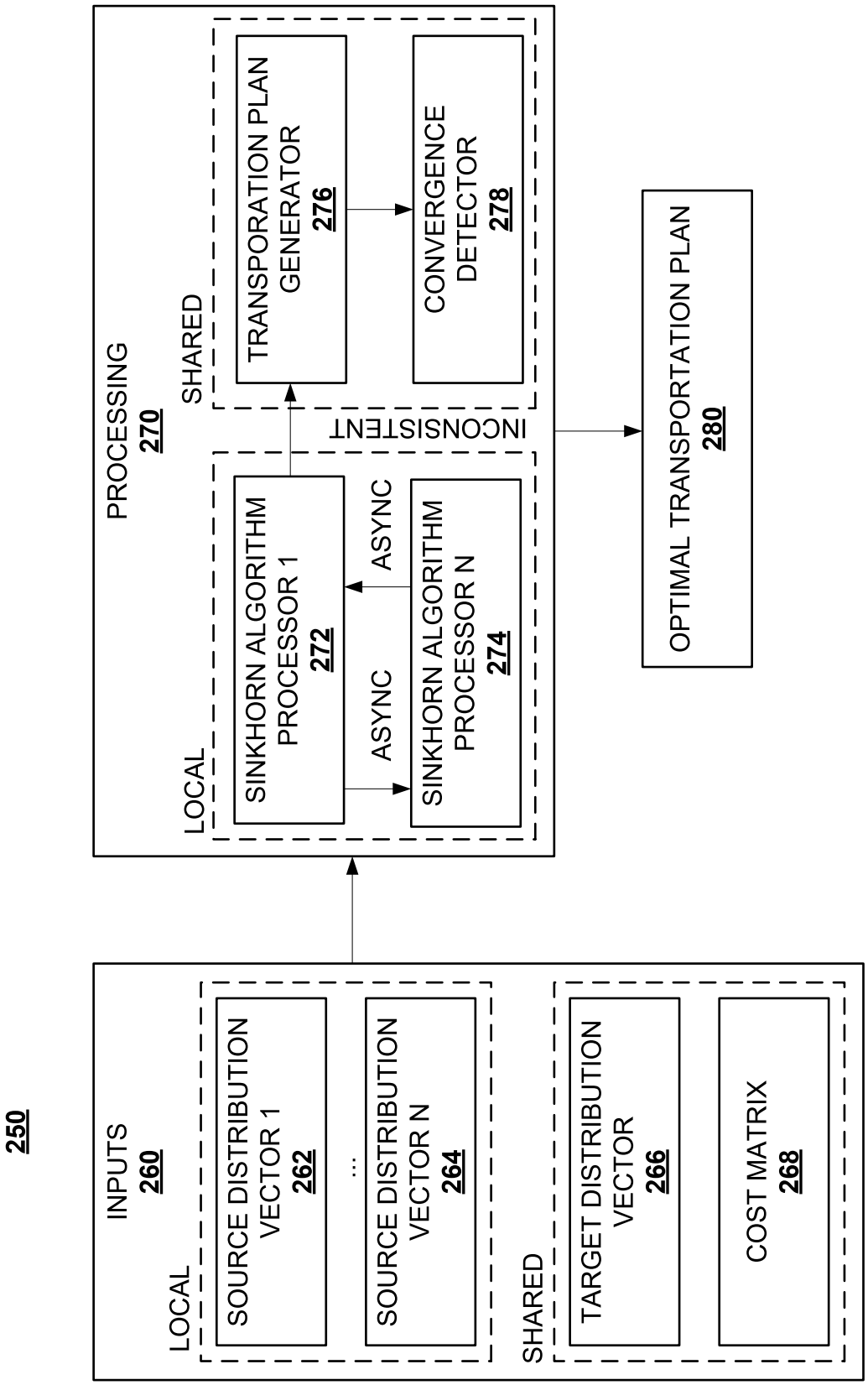
250
INPUTS
260
LOCAL
SOURCE DISTRIBUTION VECTOR 1
262
...
SOURCE DISTRIBUTION VECTOR N
264
SHARED
TARGET DISTRIBUTION VECTOR
266
COST MATRIX
268
PROCESSING
270
LOCAL
SINKHORN ALGORITHM PROCESSOR 1
272
ASYNC
ASYNC
SINKHORN ALGORITHM PROCESSOR N
274
INCONSISTENT
SHARED
TRANSPORATION PLAN GENERATOR
276
CONVERGENCE DETECTOR
278
OPTIMAL TRANSPORTATION PLAN
280

FIG. 2B

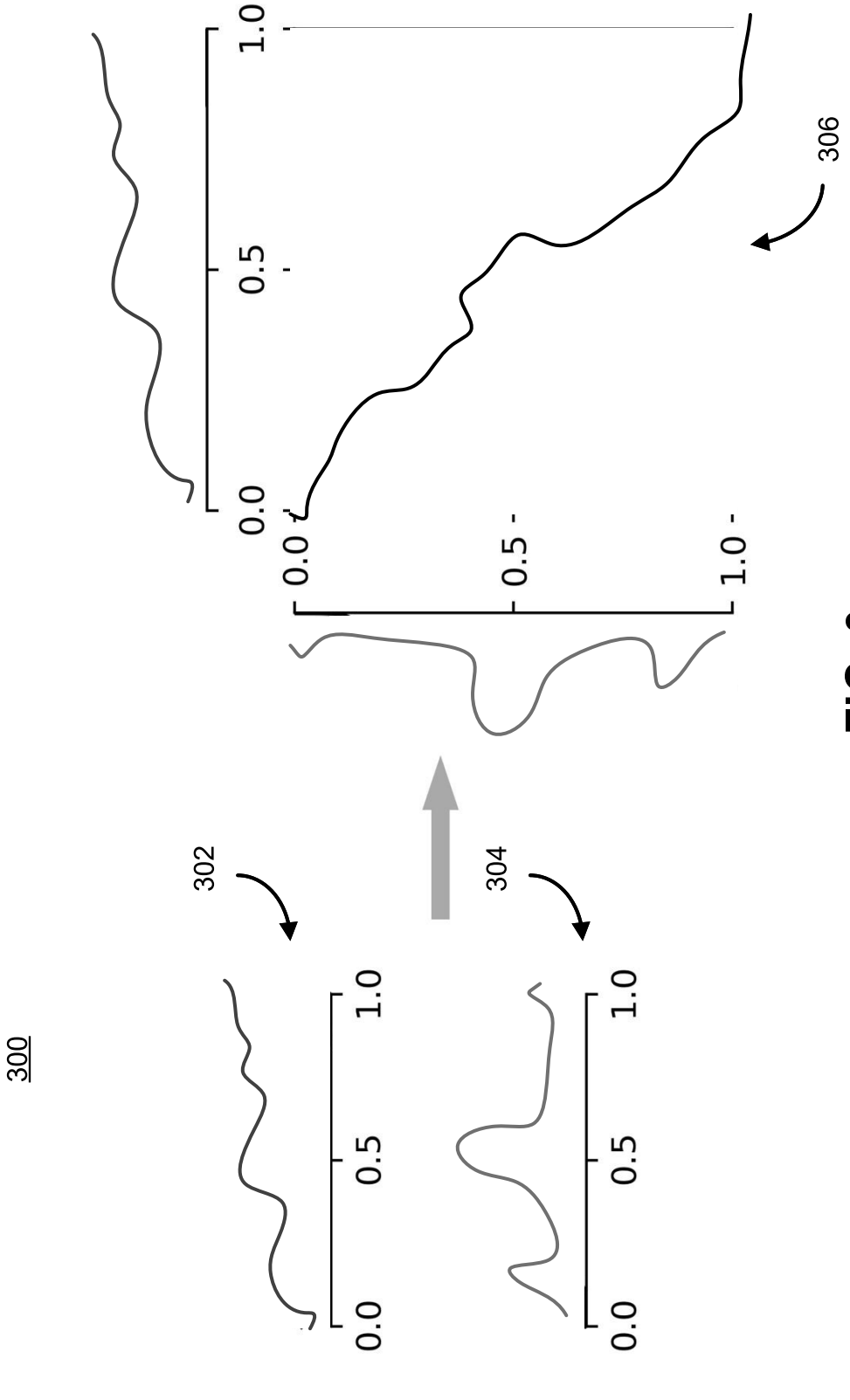

FIG. 3

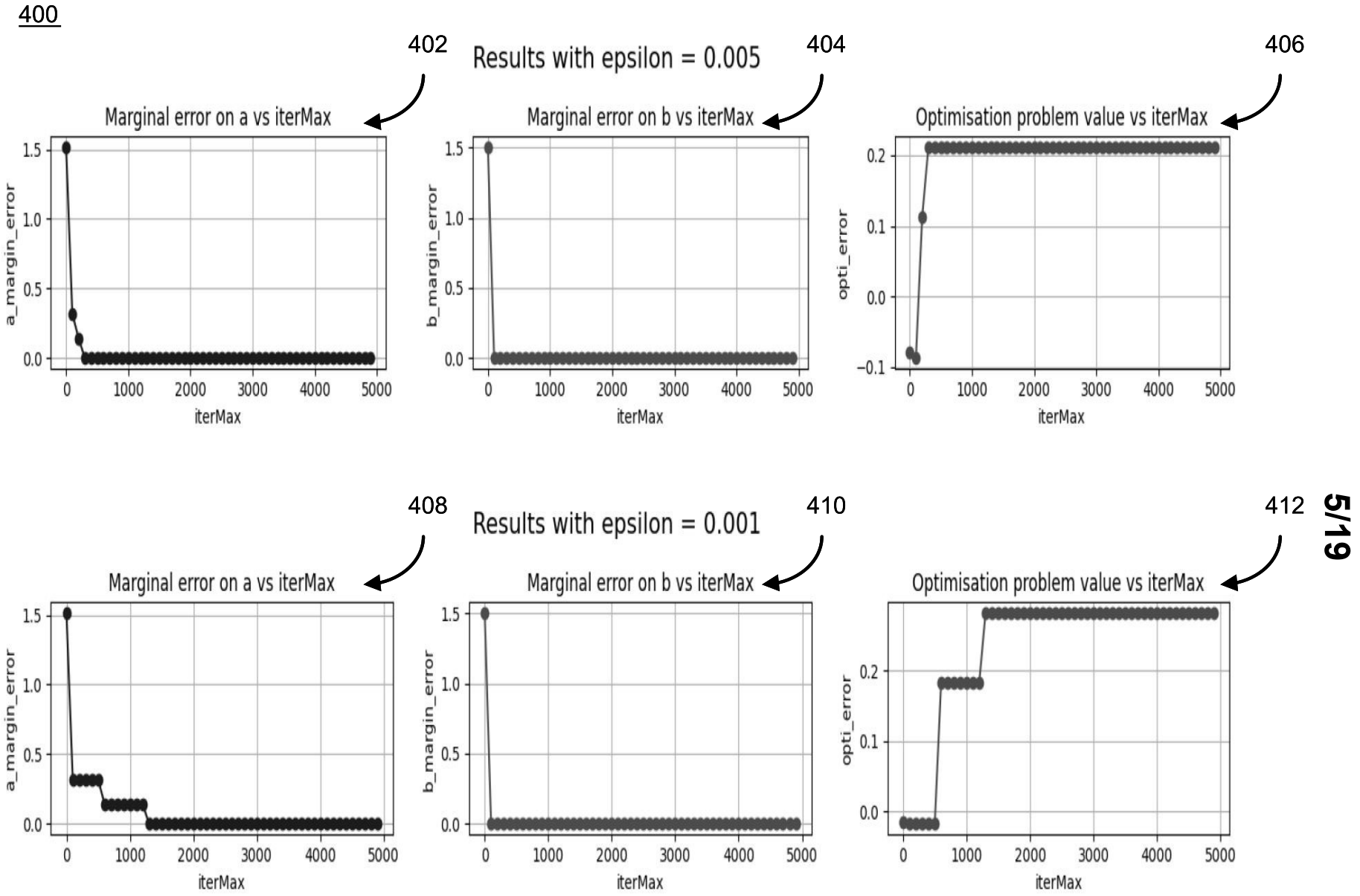
400
402
Results with epsilon = 0.005
404
406
Marginal error on a vs iterMax
Marginal error on b vs iterMax
Optimisation problem value vs iterMax
a_margin_error
b_margin_error
opti_error
iterMax
408
Results with epsilon = 0.001
410
412
Marginal error on a vs iterMax
Marginal error on b vs iterMax
Optimisation problem value vs iterMax
a_margin_error
b_margin_error
opti_error
iterMax

FIG. 4A

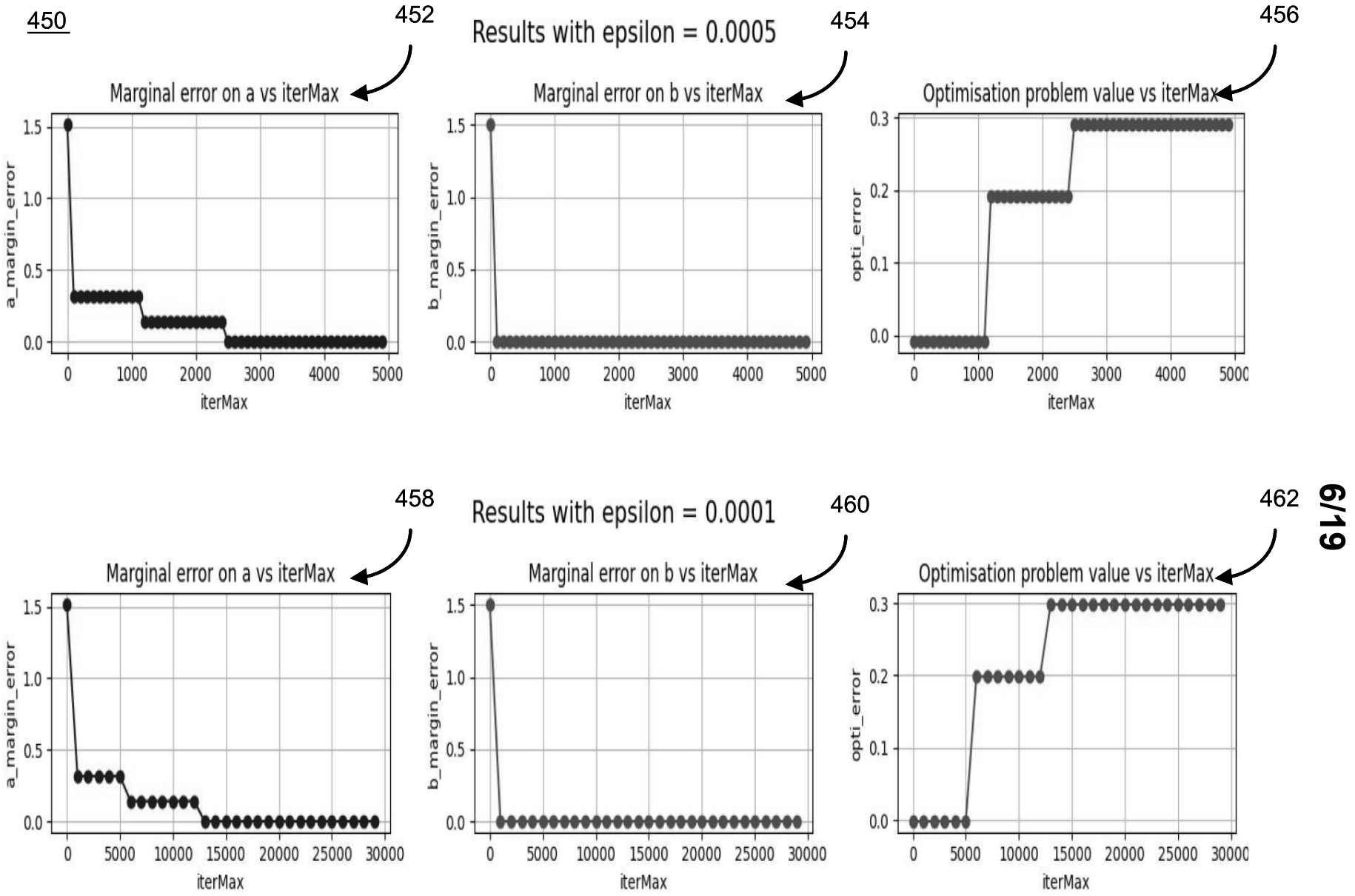
450
452
Results with epsilon = 0.0005
454
456
Marginal error on a vs iterMax
Marginal error on b vs iterMax
Optimisation problem value vs iterMax
a_margin_error
b_margin_error
opti_error
iterMax
458
Results with epsilon = 0.0001
460
462
Marginal error on a vs iterMax
Marginal error on b vs iterMax
Optimisation problem value vs iterMax

FIG. 4B

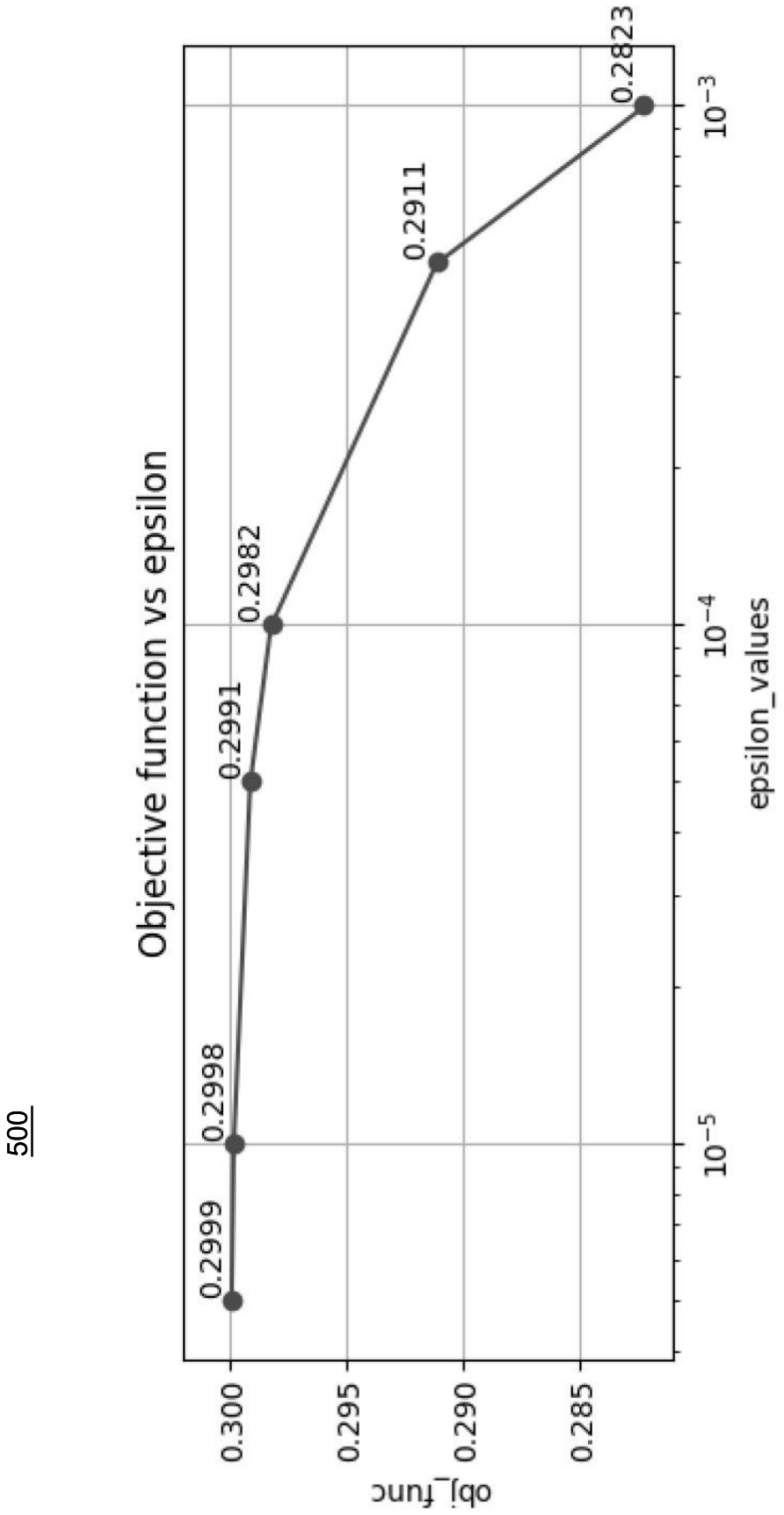
500
Objective function vs epsilon
obj_func
epsilon_values
0.300
0.295
0.290
0.285
10^{-5}
10^{-4}
10^{-3}
0.2999
0.2998
0.2991
0.2982
0.2911
0.2823

FIG. 5

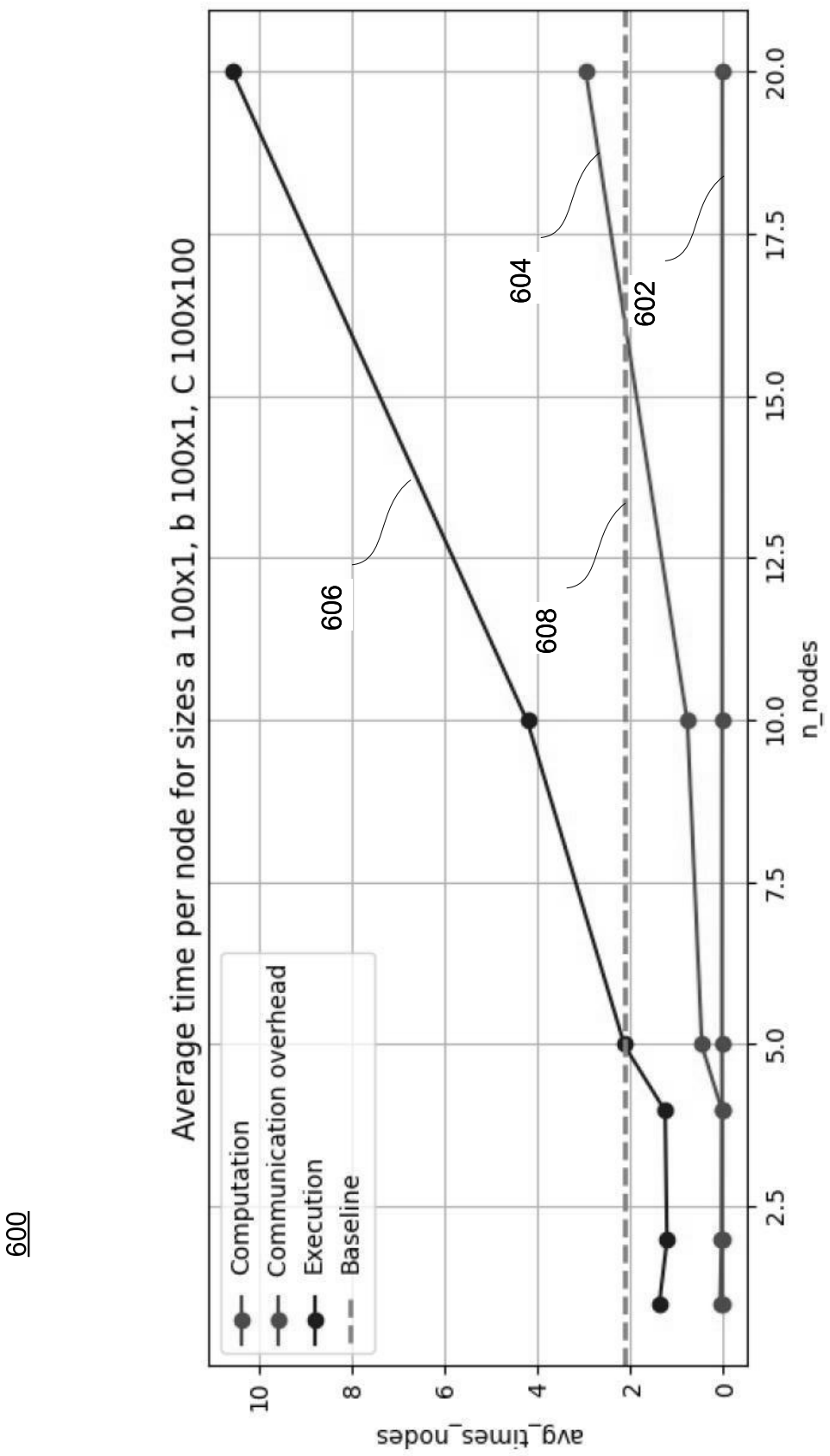
600
Average time per node for sizes a 100x1, b 100x1, C 100x100
avg_times_nodes
n_nodes
Computation
Communication overhead
Execution
Baseline
606
604
602
608
0
2
4
6
8
10
2.5
5.0
7.5
10.0
12.5
15.0
17.5
20.0

FIG. 6A

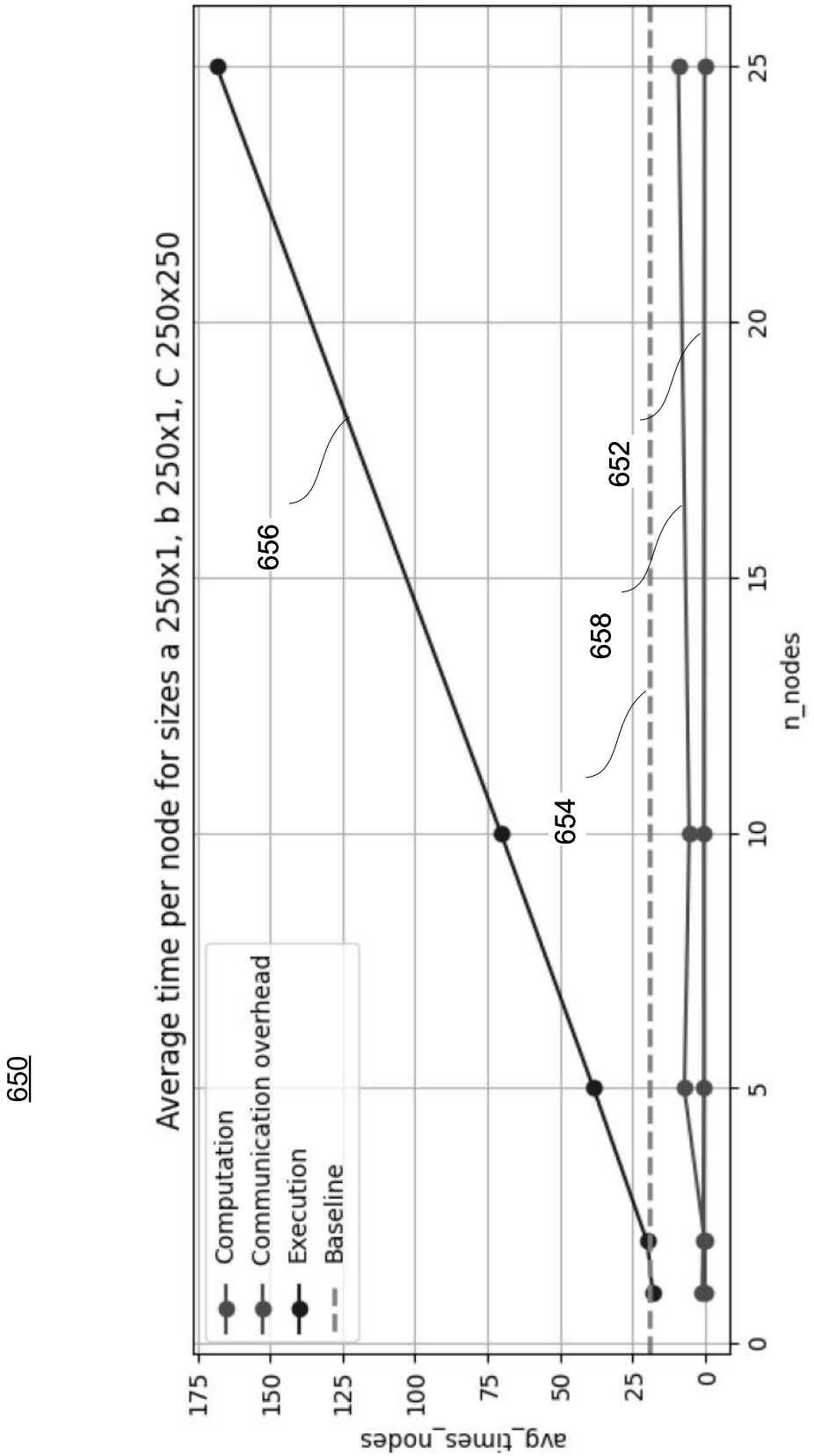
650
Average time per node for sizes a 250x1, b 250x1, C 250x250
avg_times_nodes
n_nodes
Computation
Communication overhead
Execution
Baseline
656
652
658
654
0
25
50
75
100
125
150
175
0
5
10
15
20
25

FIG. 6B

700

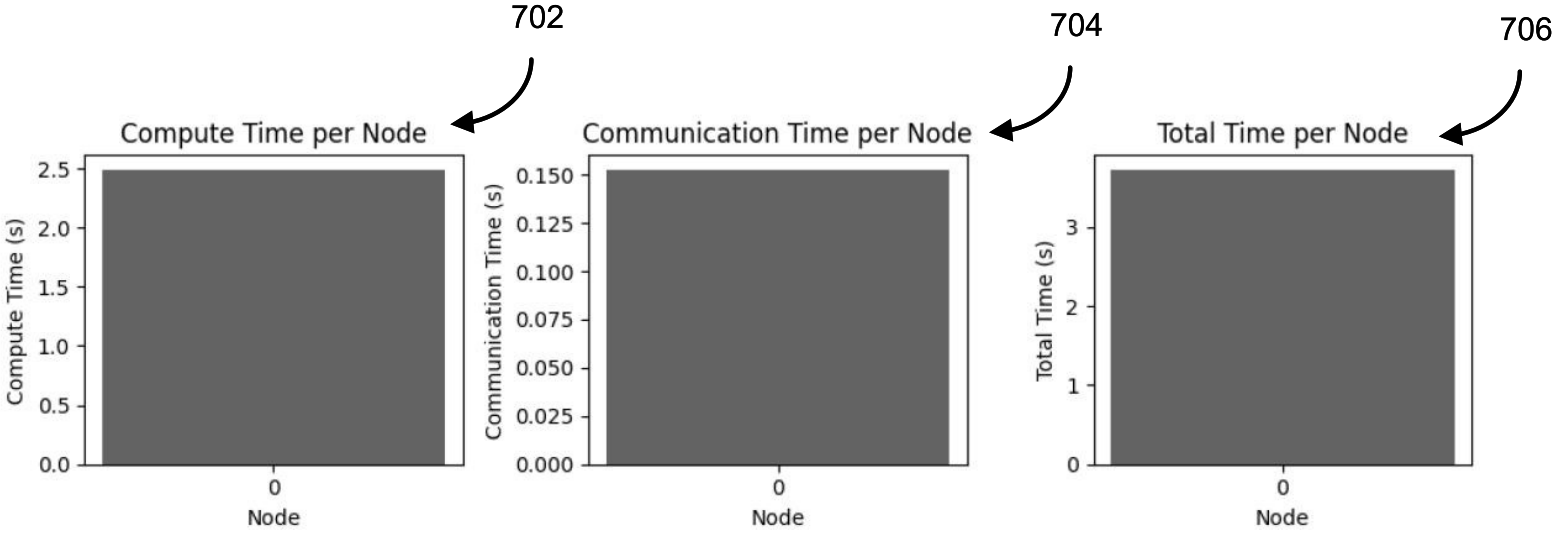
702
704
706
Compute Time per Node
Communication Time per Node
Total Time per Node
Compute Time (s)
Communication Time (s)
Total Time (s)
Node
1 node, size 100
708
710
712
Compute Time per Node
Communication Time per Node
Total Time per Node
Compute Time (s)
Communication Time (s)
Total Time (s)
Node
2 nodes, size 100

FIG. 7A

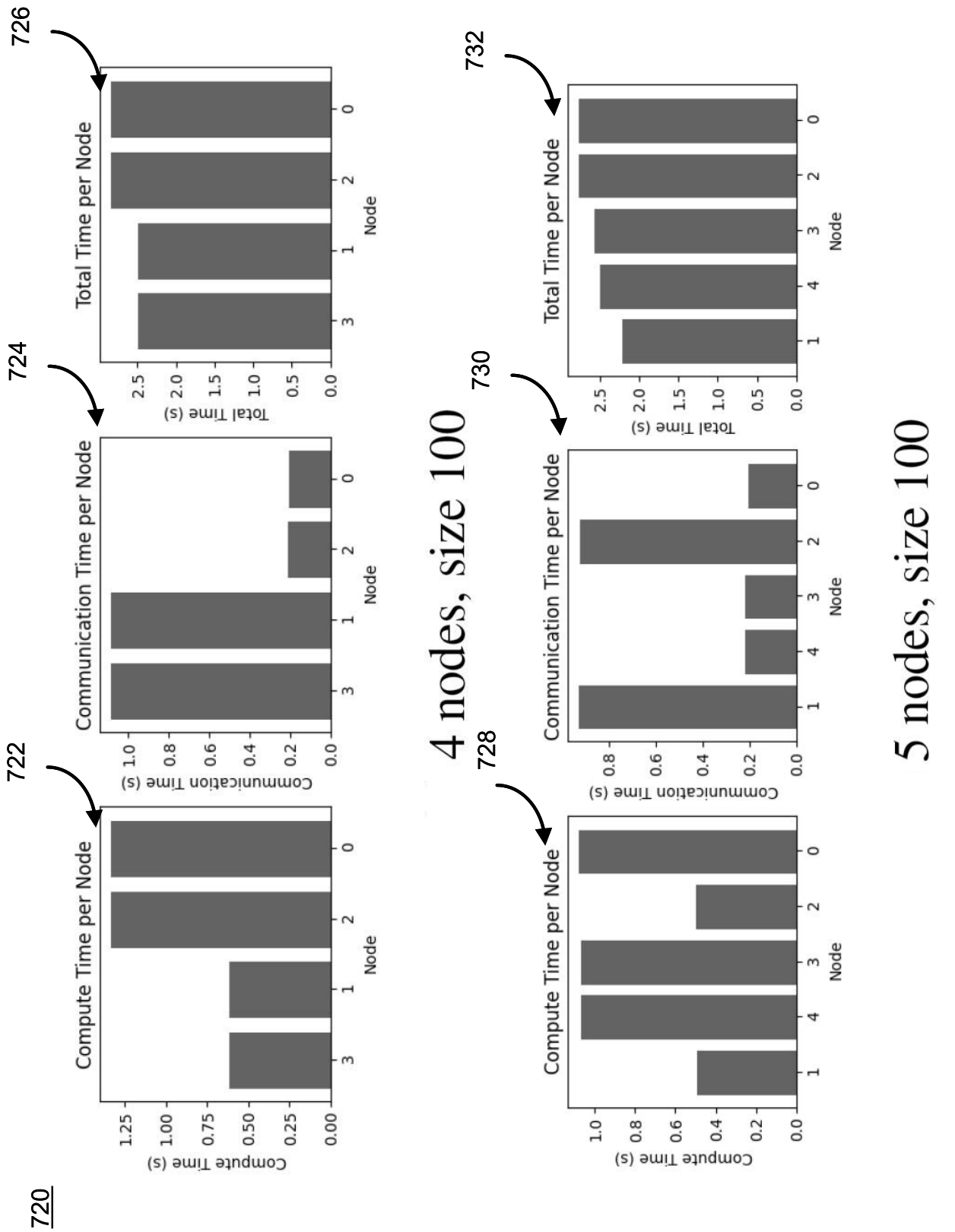
720
722
Compute Time per Node
Compute Time (s)
Node
724
Communication Time per Node
Communication Time (s)
Node
726
Total Time per Node
Total Time (s)
Node
4 nodes, size 100
728
Compute Time per Node
Compute Time (s)
Node
730
Communication Time per Node
Communication Time (s)
Node
732
Total Time per Node
Total Time (s)
Node
5 nodes, size 100

FIG. 7B

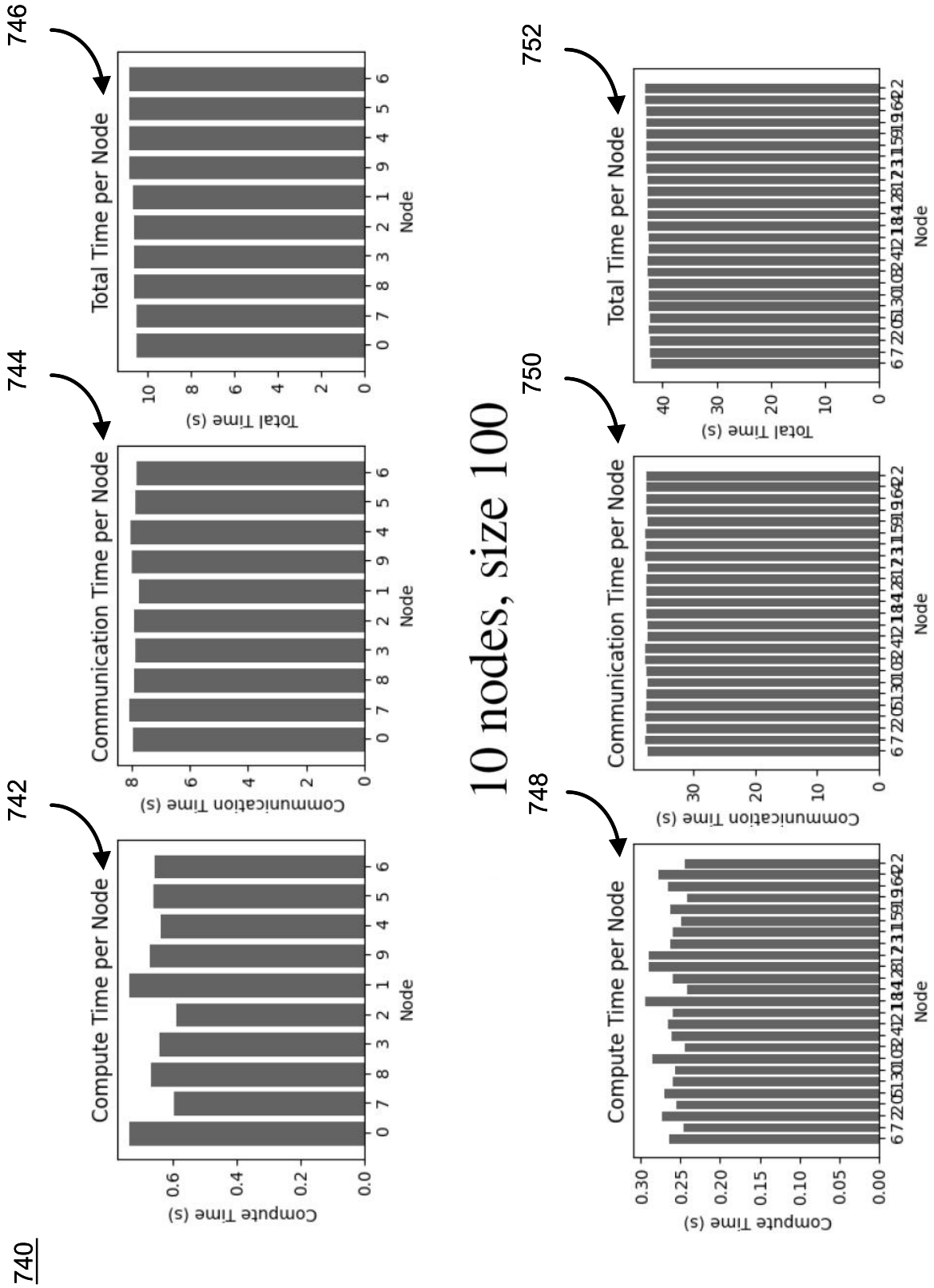
740
742
744
746
748
750
752
Compute Time per Node
Communication Time per Node
Total Time per Node
Compute Time (s)
Communication Time (s)
Total Time (s)
Node
10 nodes, size 100
25 nodes, size 100

FIG. 7C

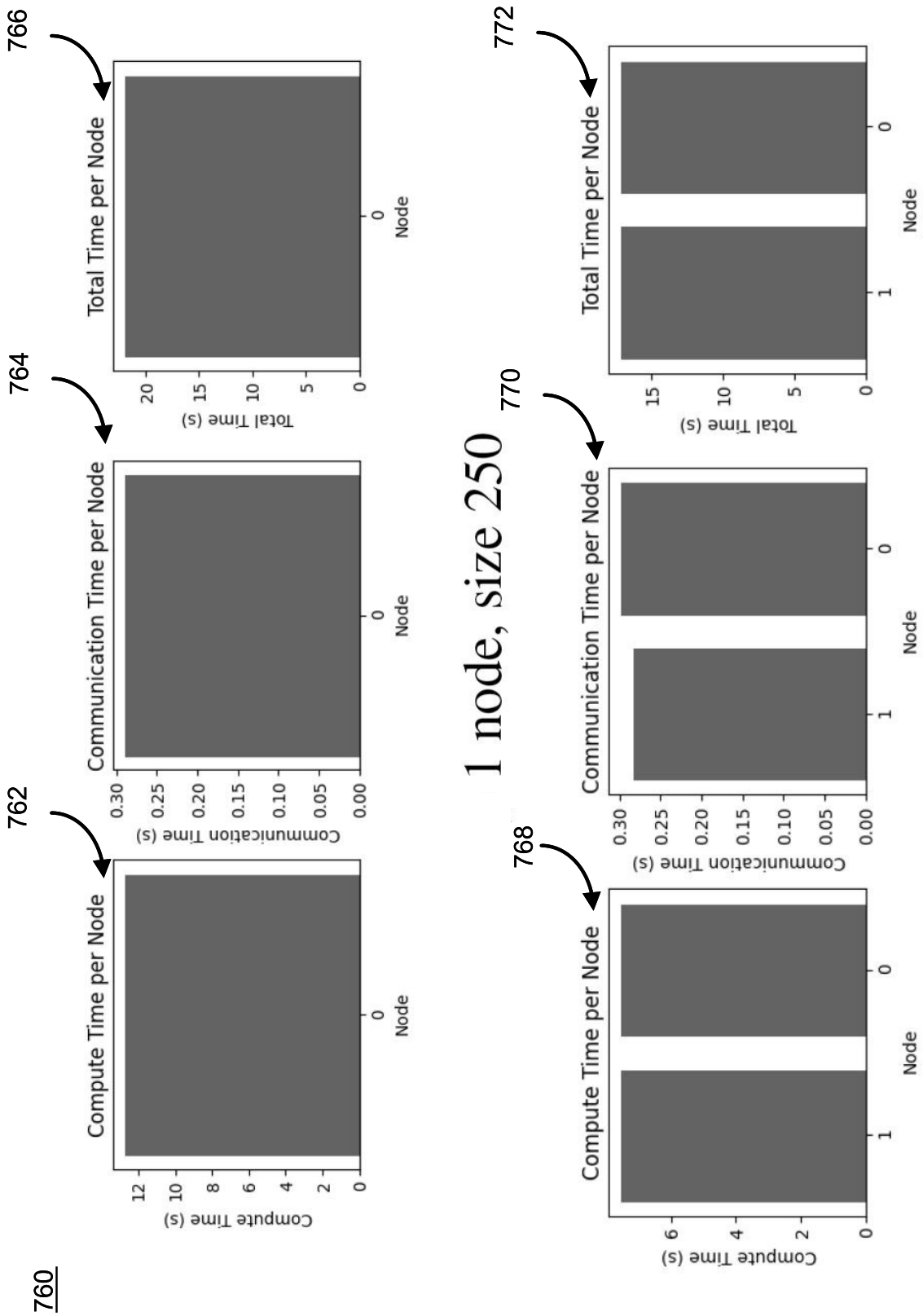
760
762
Compute Time per Node
Compute Time (s)
Node
764
Communication Time per Node
Communication Time (s)
Node
766
Total Time per Node
Total Time (s)
Node
1 node, size 250
768
Compute Time per Node
Compute Time (s)
Node
770
Communication Time per Node
Communication Time (s)
Node
772
Total Time per Node
Total Time (s)
Node
2 nodes, size 250

FIG. 7D

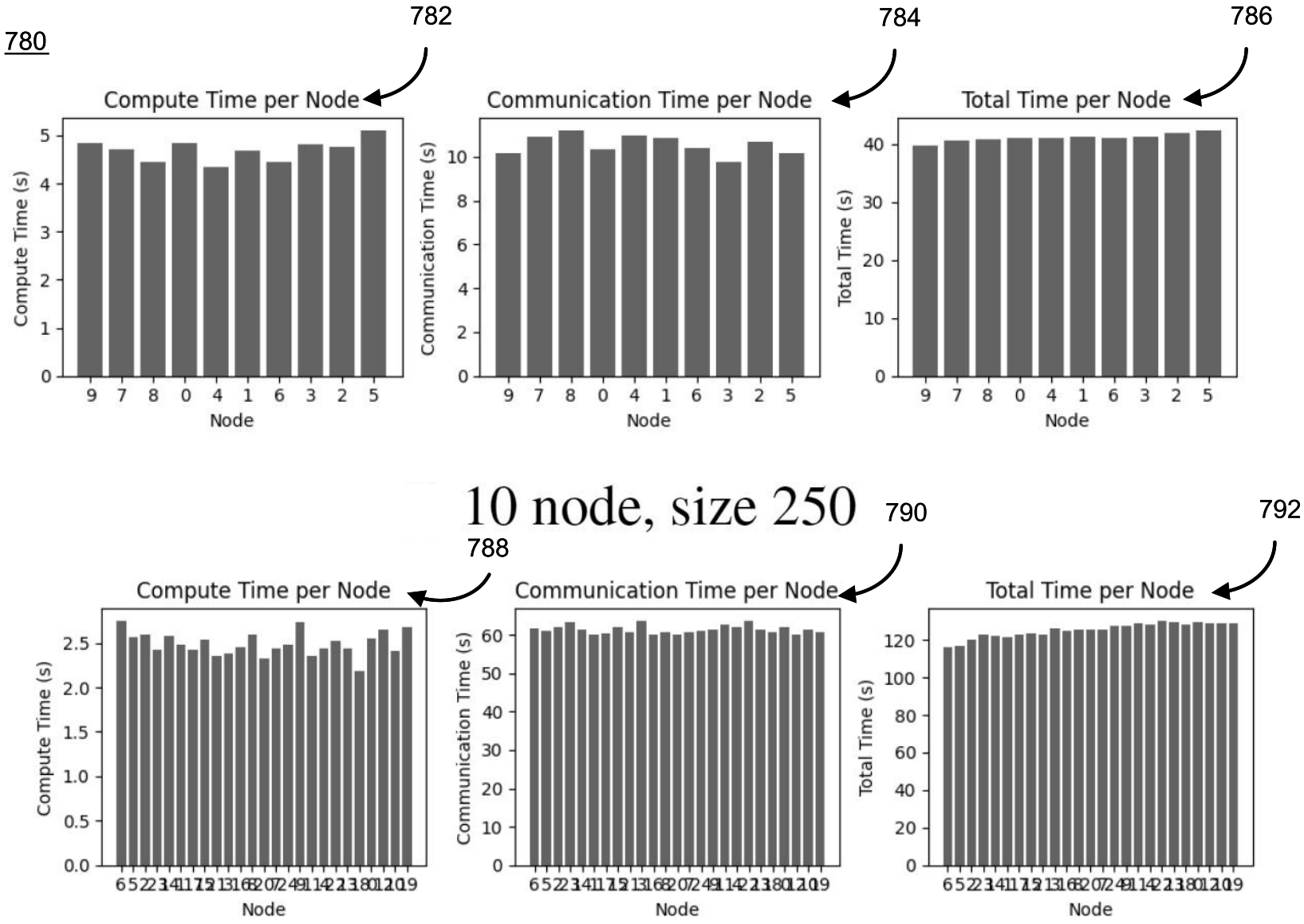
780
782
784
786
Compute Time per Node
Communication Time per Node
Total Time per Node
Compute Time (s)
Communication Time (s)
Total Time (s)
Node
10 node, size 250
788
790
792
25 nodes, size 250

FIG. 7E

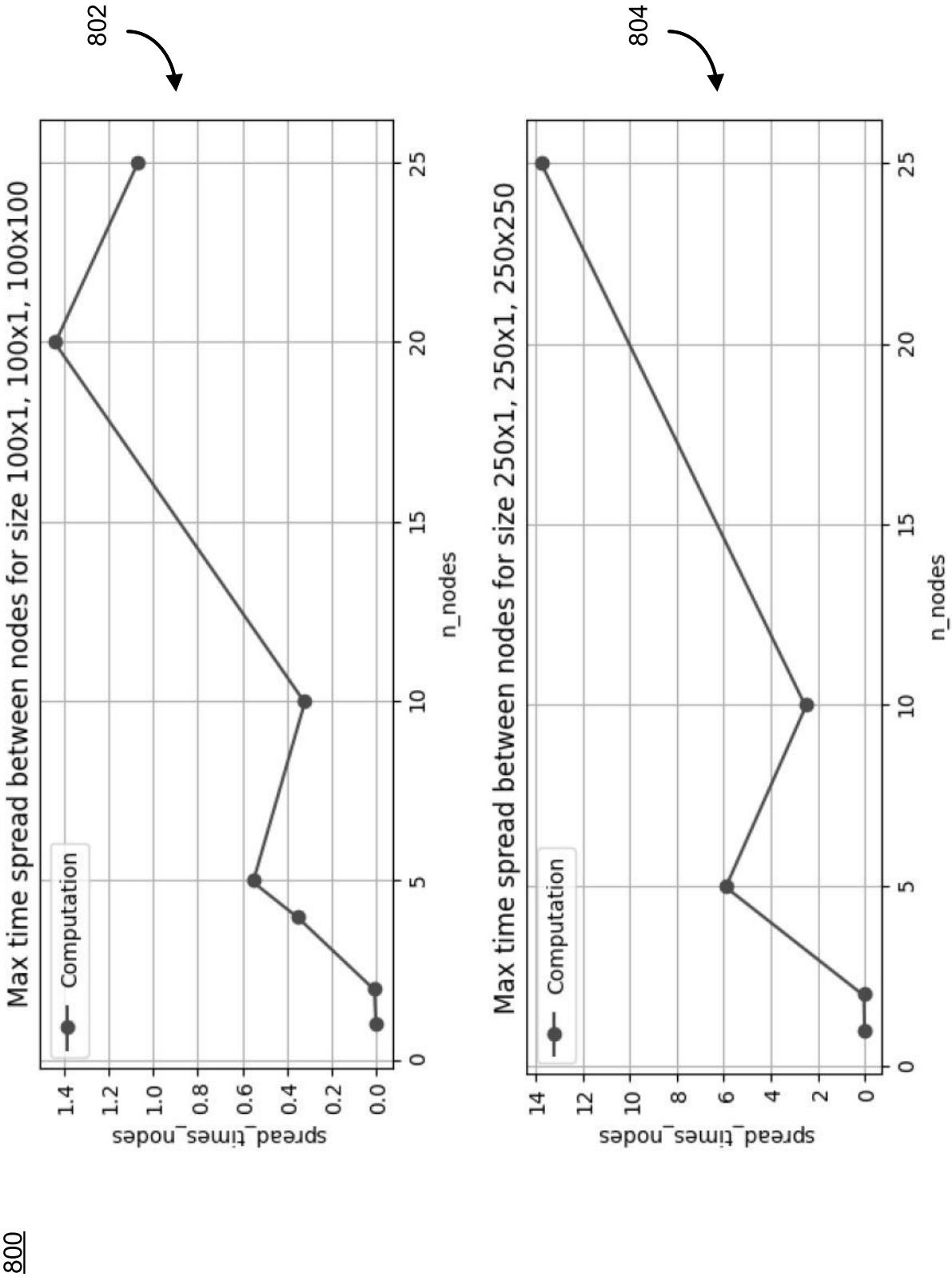
800
802
Max time spread between nodes for size 100x1, 100x1, 100x100
Computation
spread_times_nodes
n_nodes
0.0
0.2
0.4
0.6
0.8
1.0
1.2
1.4
0
5
10
15
20
25
804
Max time spread between nodes for size 250x1, 250x1, 250x250
Computation
spread_times_nodes
n_nodes
0
2
4
6
8
10
12
14
0
5
10
15
20
25

FIG. 8

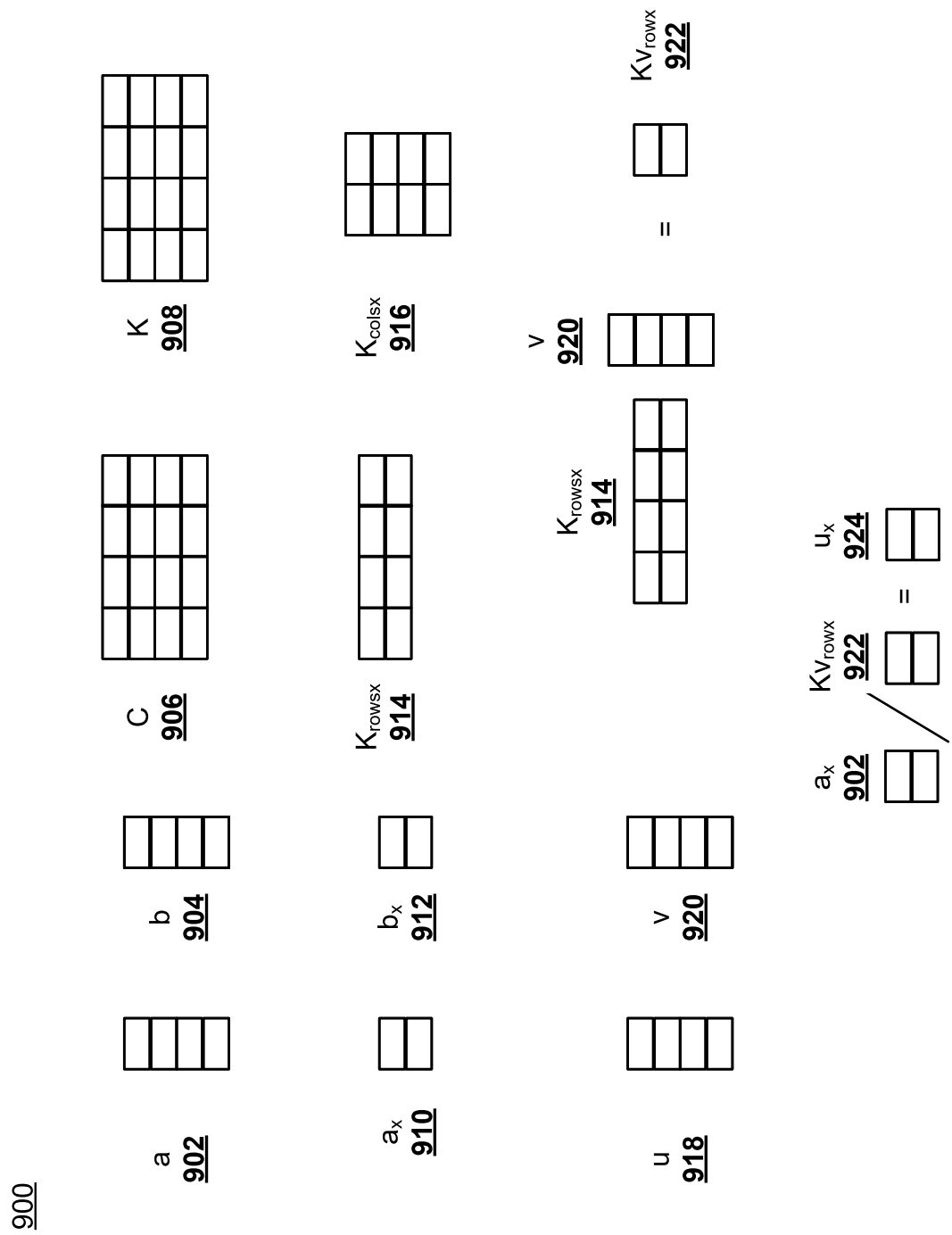
900
a
902
b
904
C
906
K
908
a_x
910
b_x
912
K_{rowsx}
914
K_{colsx}
916
u
918
v
920
KV_{rowx}
922
u_x
924
=

FIG. 9

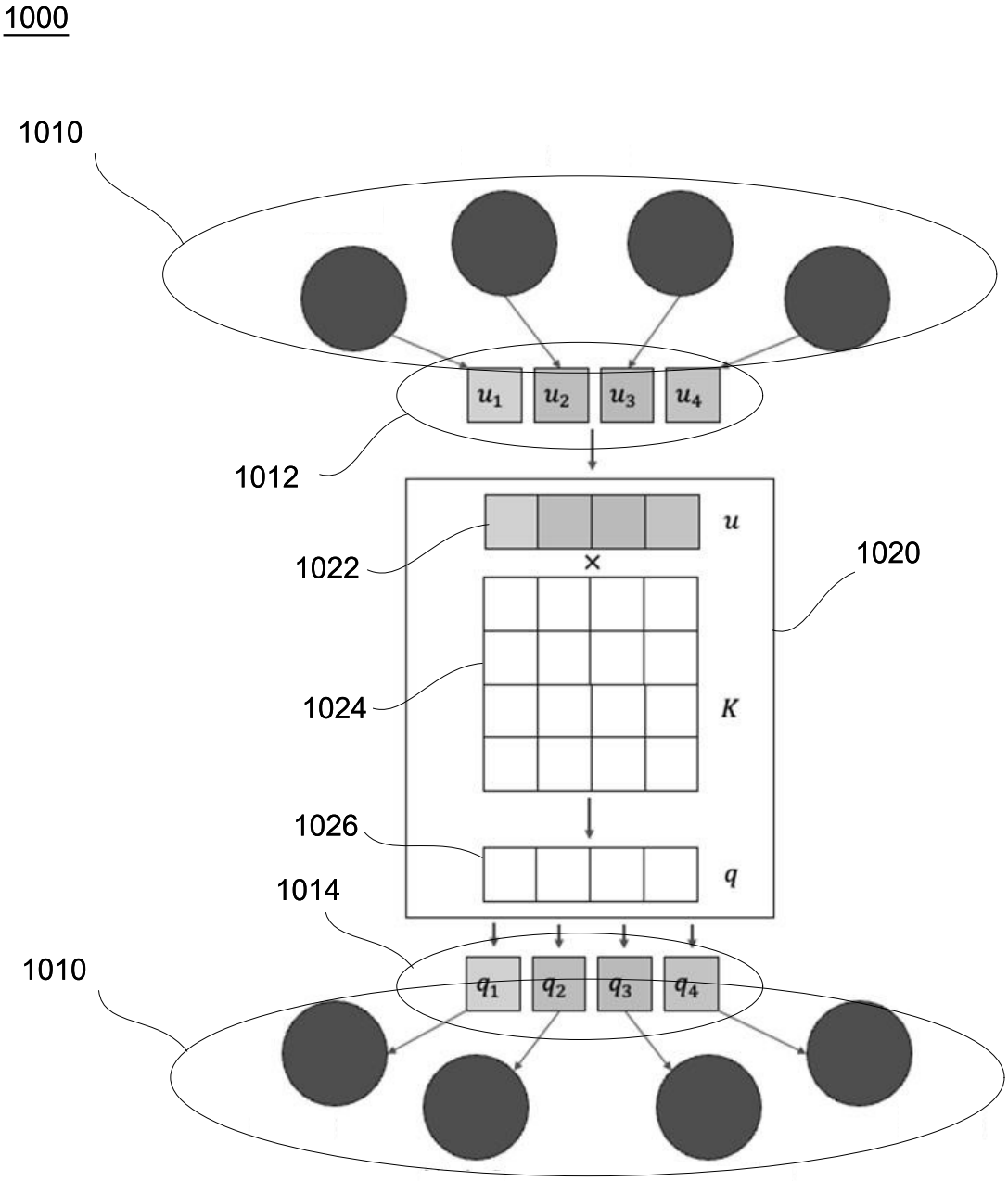
1000
1010
u_1
u_2
u_3
u_4
1012
u
1022
1020
1024
K
1026
q
1014
1010
q_1
q_2
q_3
q_4

FIG. 10

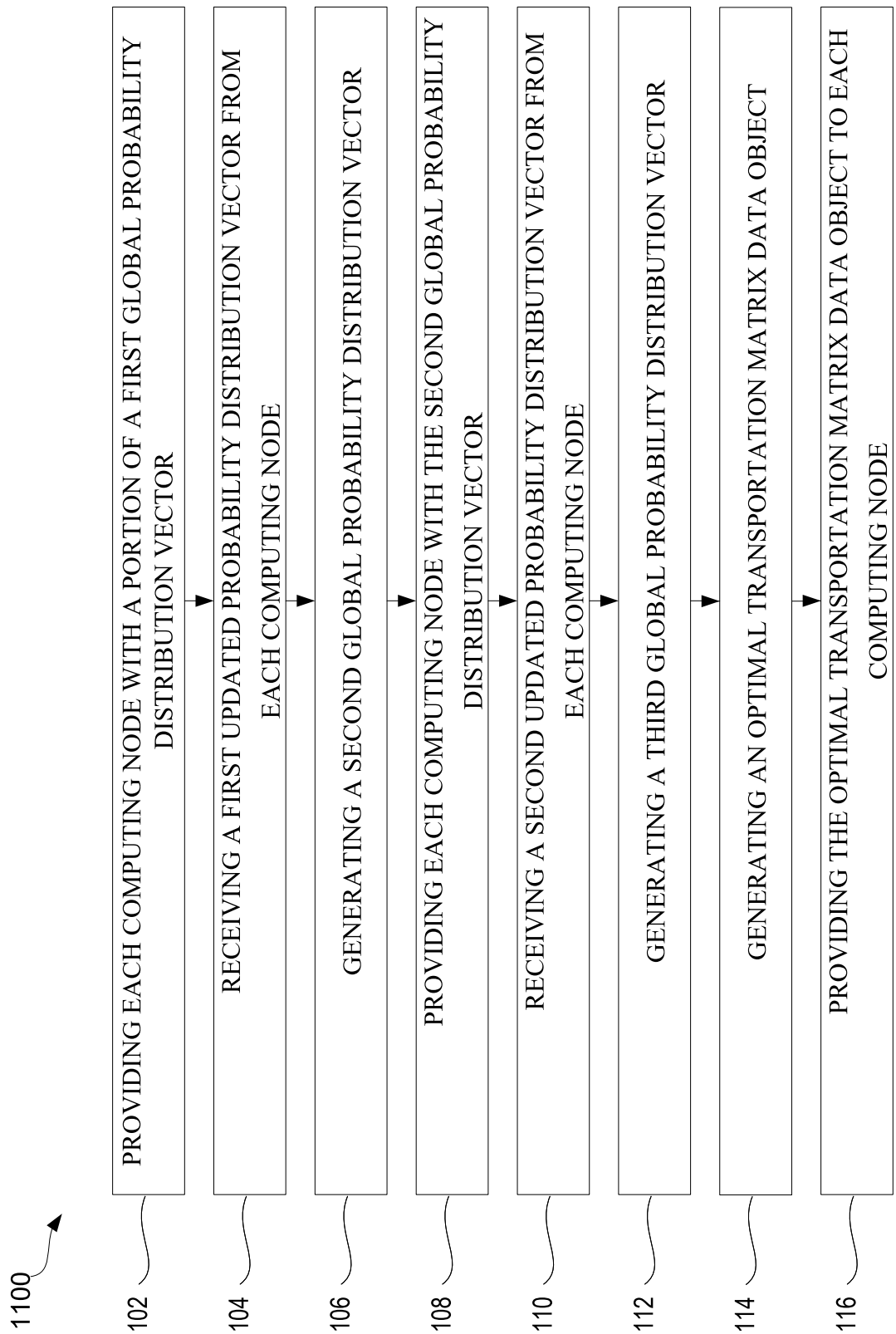
1100
1102
PROVIDING EACH COMPUTING NODE WITH A PORTION OF A FIRST GLOBAL PROBABILITY DISTRIBUTION VECTOR
1104
RECEIVING A FIRST UPDATED PROBABILITY DISTRIBUTION VECTOR FROM EACH COMPUTING NODE
1106
GENERATING A SECOND GLOBAL PROBABILITY DISTRIBUTION VECTOR
1108
PROVIDING EACH COMPUTING NODE WITH THE SECOND GLOBAL PROBABILITY DISTRIBUTION VECTOR
1110
RECEIVING A SECOND UPDATED PROBABILITY DISTRIBUTION VECTOR FROM EACH COMPUTING NODE
1112
GENERATING A THIRD GLOBAL PROBABILITY DISTRIBUTION VECTOR
1114
GENERATING AN OPTIMAL TRANSPORTATION MATRIX DATA OBJECT
1116
PROVIDING THE OPTIMAL TRANSPORTATION MATRIX DATA OBJECT TO EACH COMPUTING NODE

FIG. 11

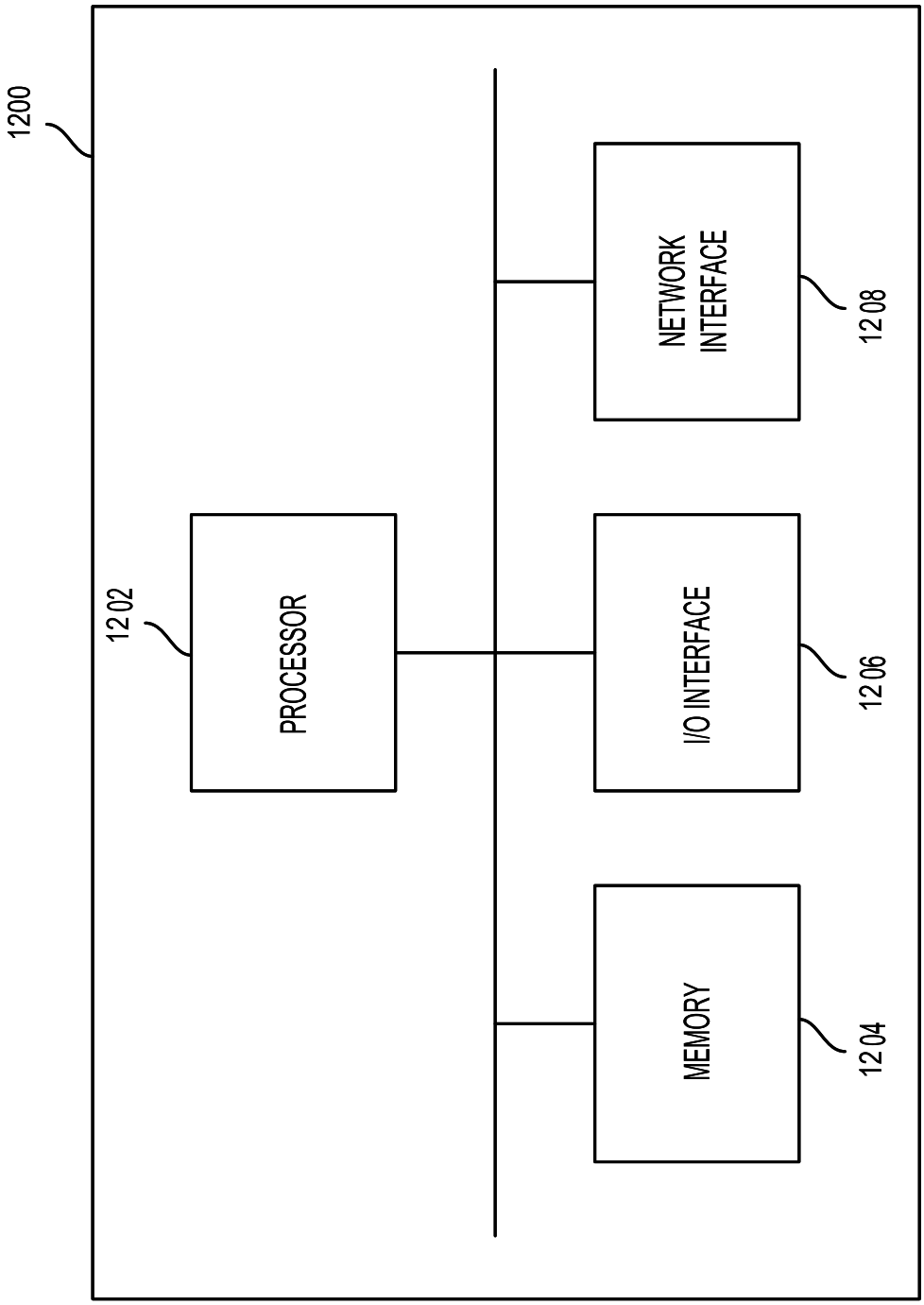
1200
NETWORK INTERFACE
1208
PROCESSOR
1202
I/O INTERFACE
1206
MEMORY
1204

FIG. 12