FIG. 1

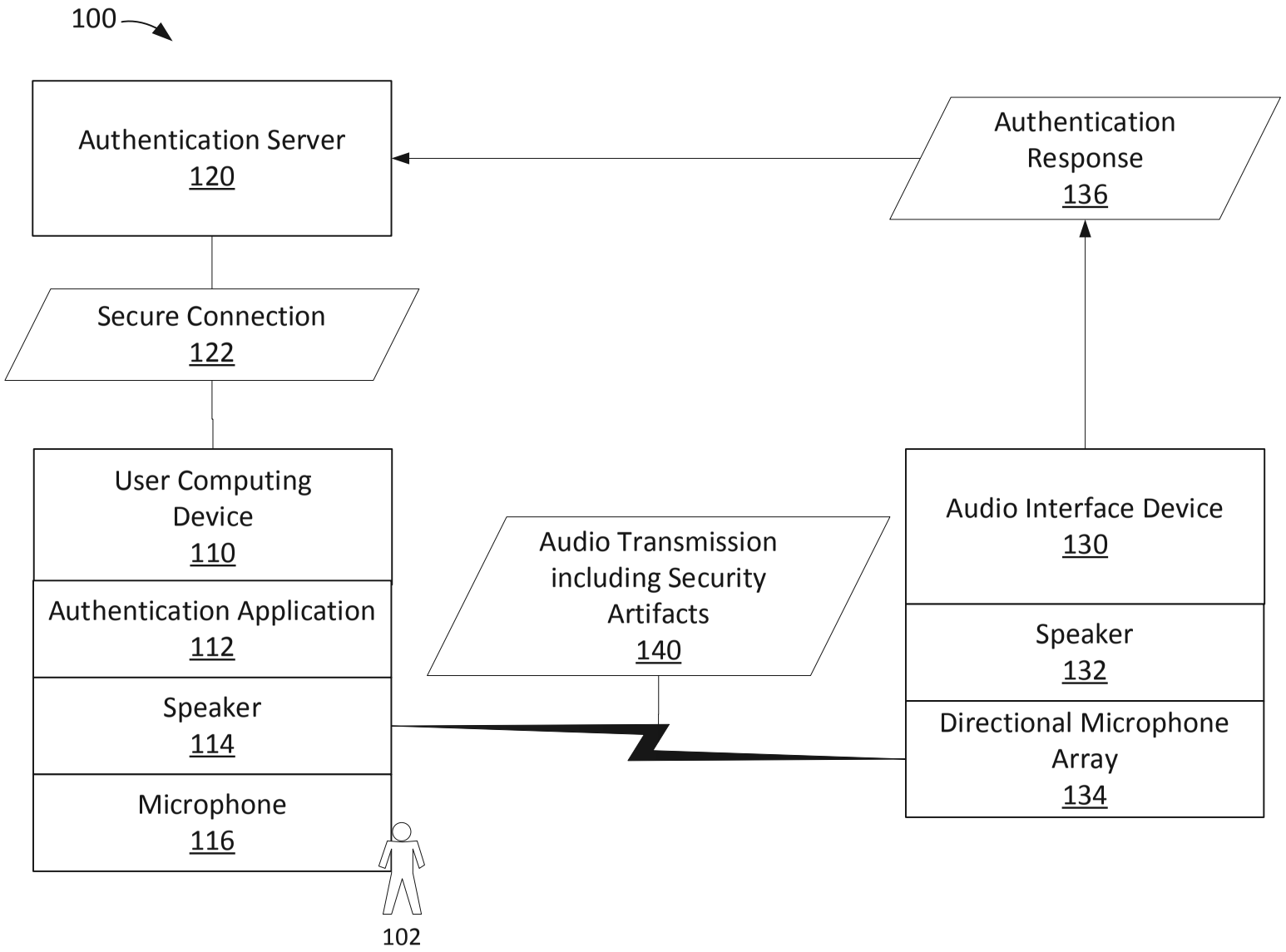
100
Authentication Server
120
Authentication Response
136
Secure Connection
122
User Computing Device
110
Authentication Application
112
Speaker
114
Microphone
116
Audio Transmission including Security Artifacts
140
Audio Interface Device
130
Speaker
132
Directional Microphone Array
134
102

FIG. 2

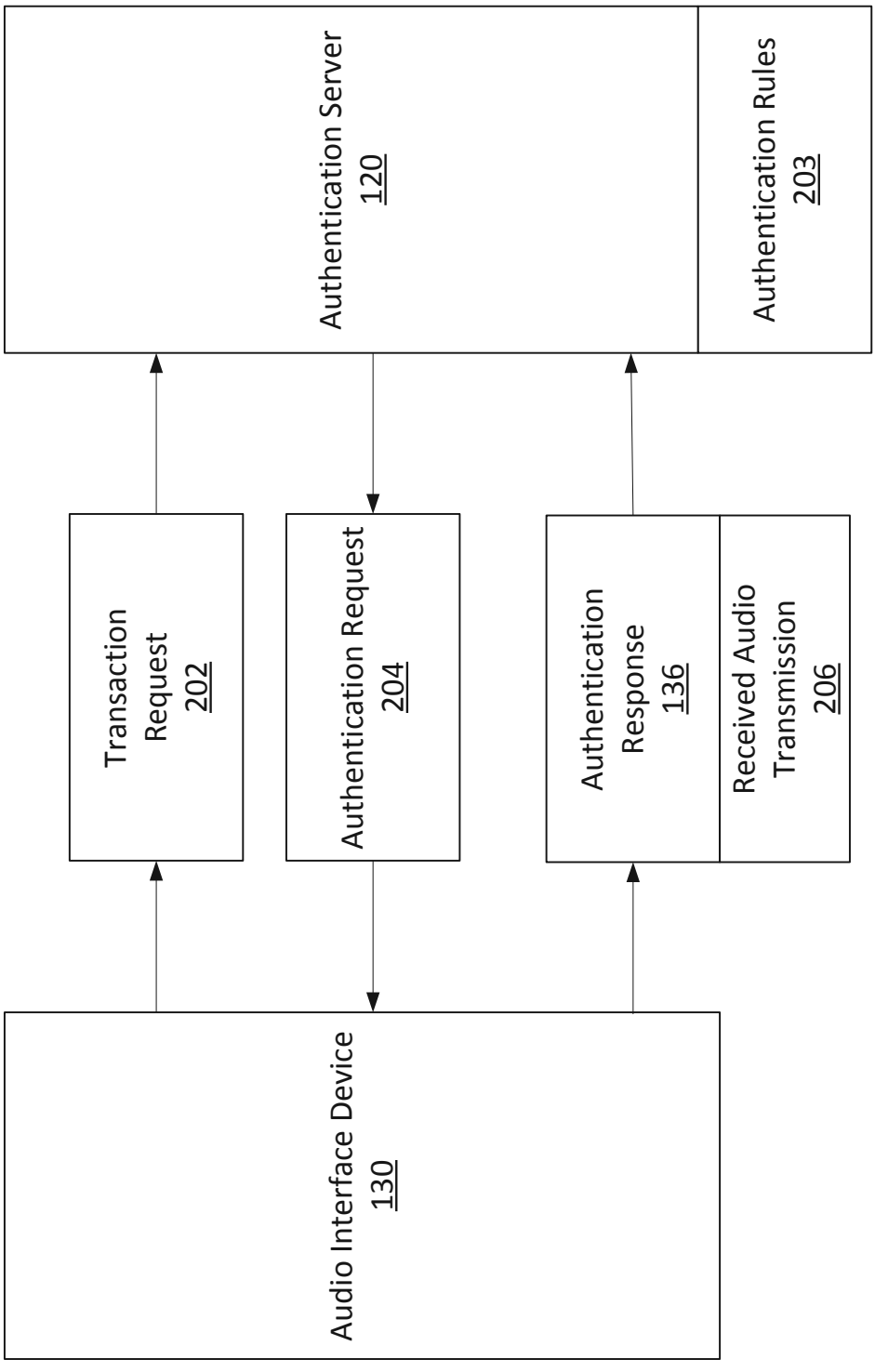
Authentication Server
120
Authentication Rules
203
Transaction
Request
202
Authentication Request
204
Authentication
Response
136
Received Audio
Transmission
206
Audio Interface Device
130

FIG. 3

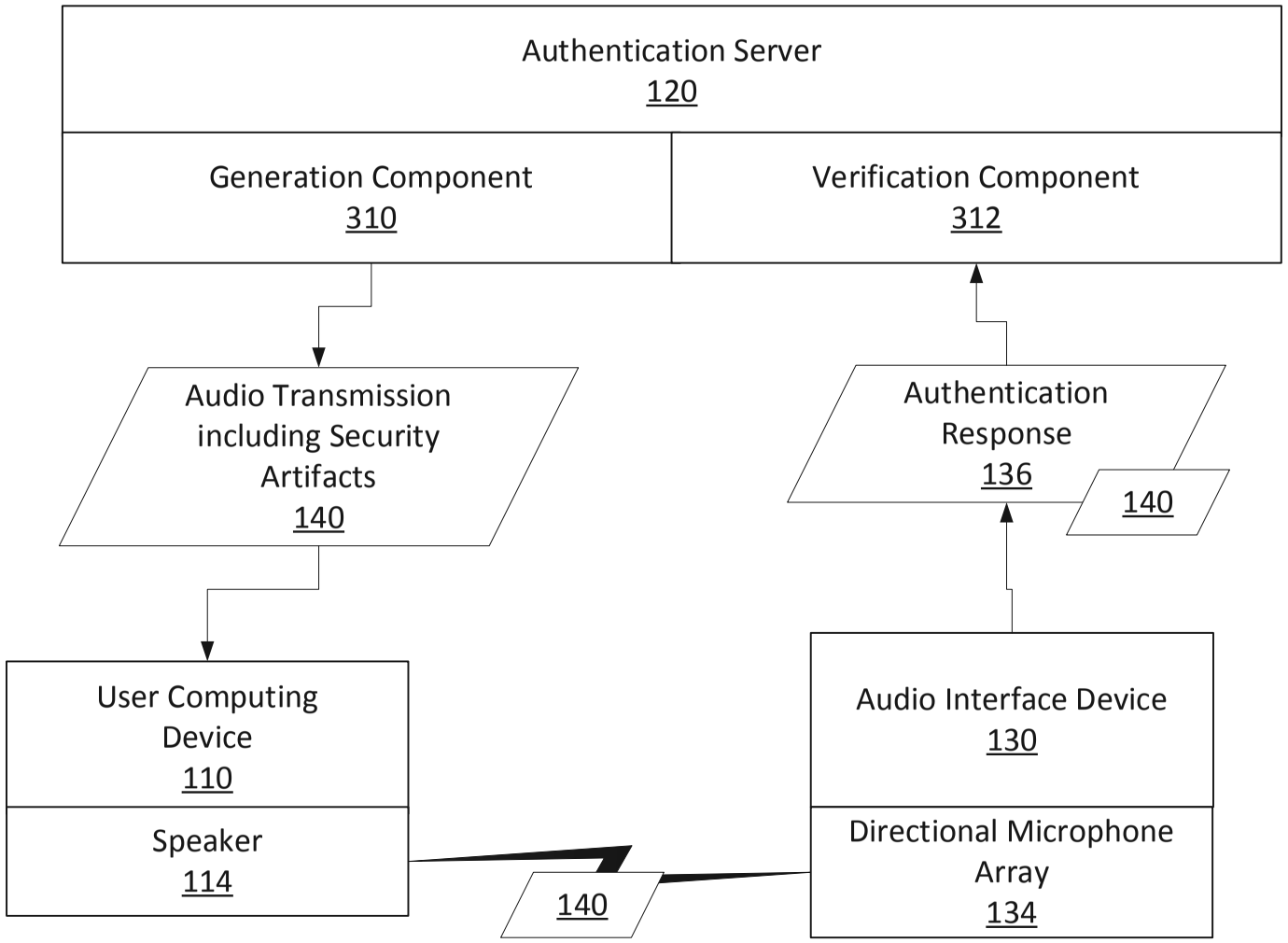
Authentication Server
120
Generation Component
310
Verification Component
312
Audio Transmission including Security Artifacts
140
Authentication Response
136
140
User Computing Device
110
Speaker
114
140
Audio Interface Device
130
Directional Microphone Array
134

FIG. 4

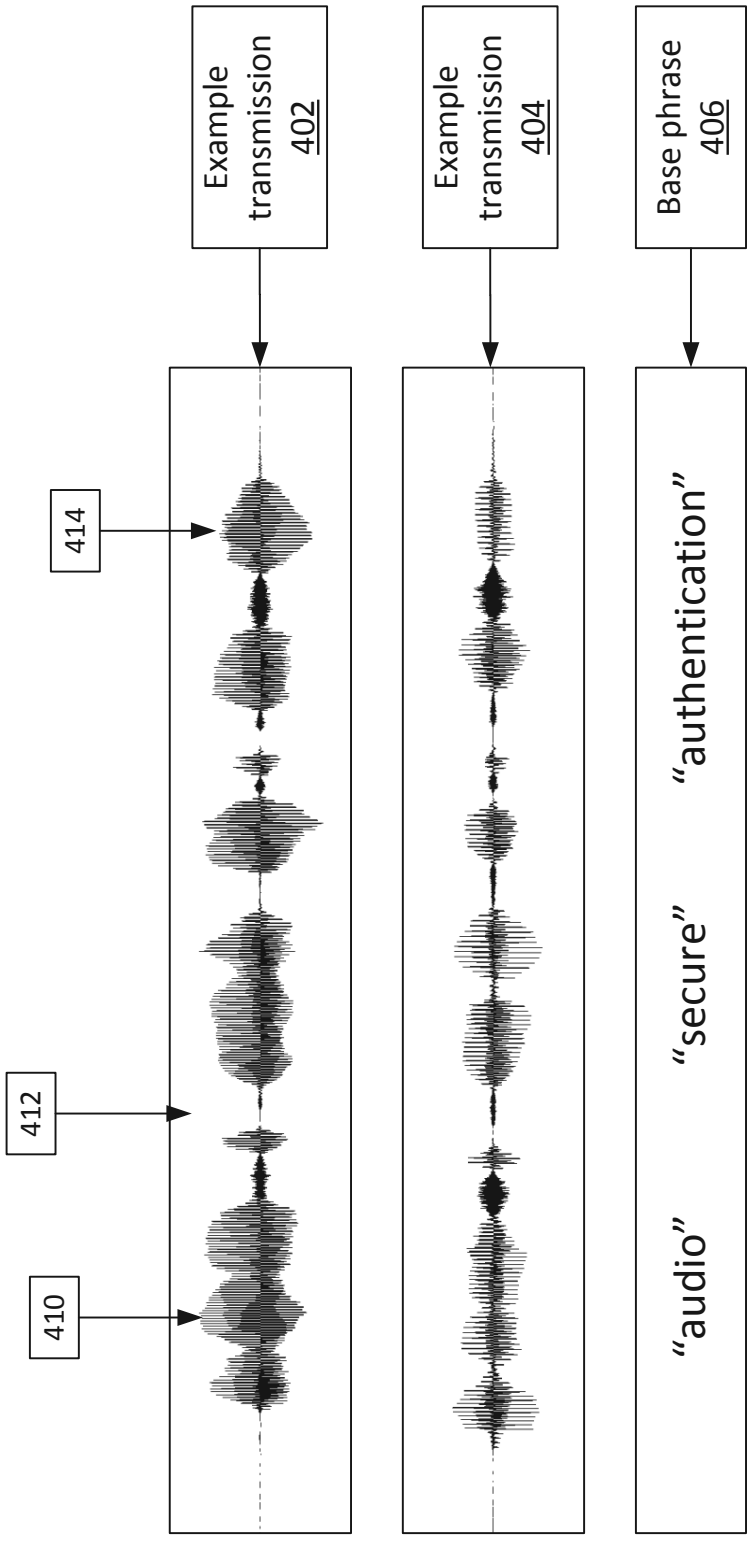
Example transmission 402
Example transmission 404
Base phrase 406
414
412
410
"audio"
"secure"
"authentication"

FIG. 5

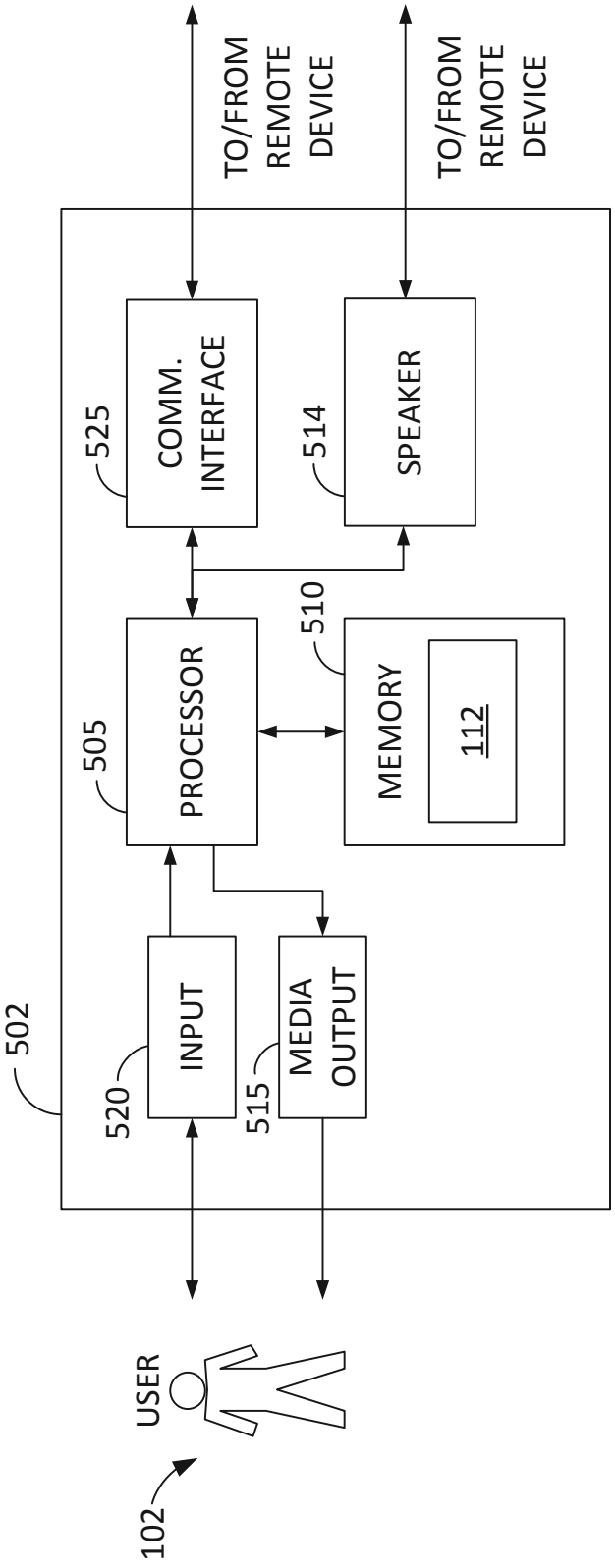
TO/FROM REMOTE DEVICE
TO/FROM REMOTE DEVICE
COMM. INTERFACE
525
SPEAKER
514
PROCESSOR
505
MEMORY
510
112
INPUT
520
MEDIA OUTPUT
515
502
USER
102

FIG. 6

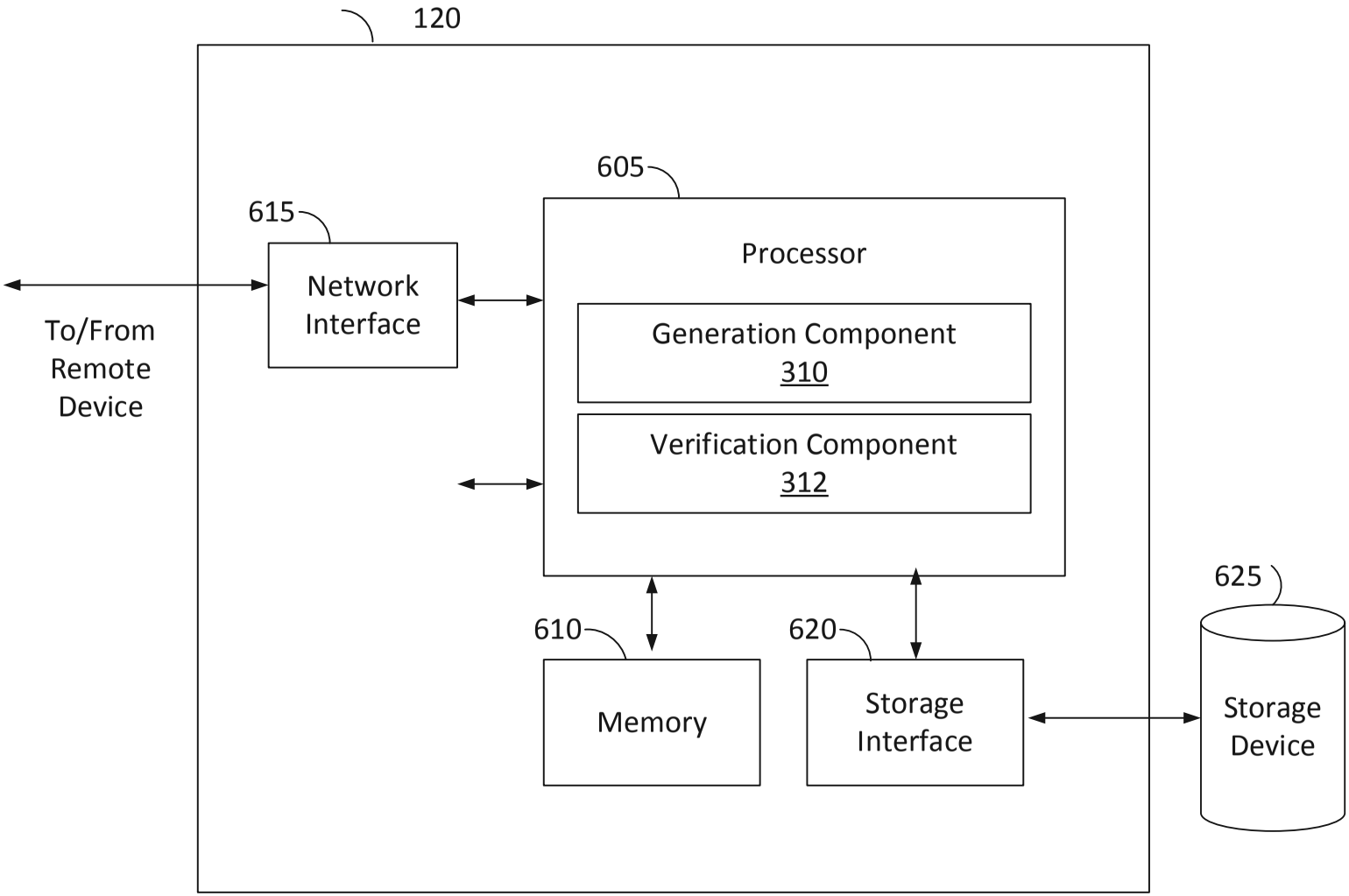
120
605
615
Network Interface
To/From Remote Device
Processor
Generation Component 310
Verification Component 312
610
Memory
620
Storage Interface
625
Storage Device

FIG. 7

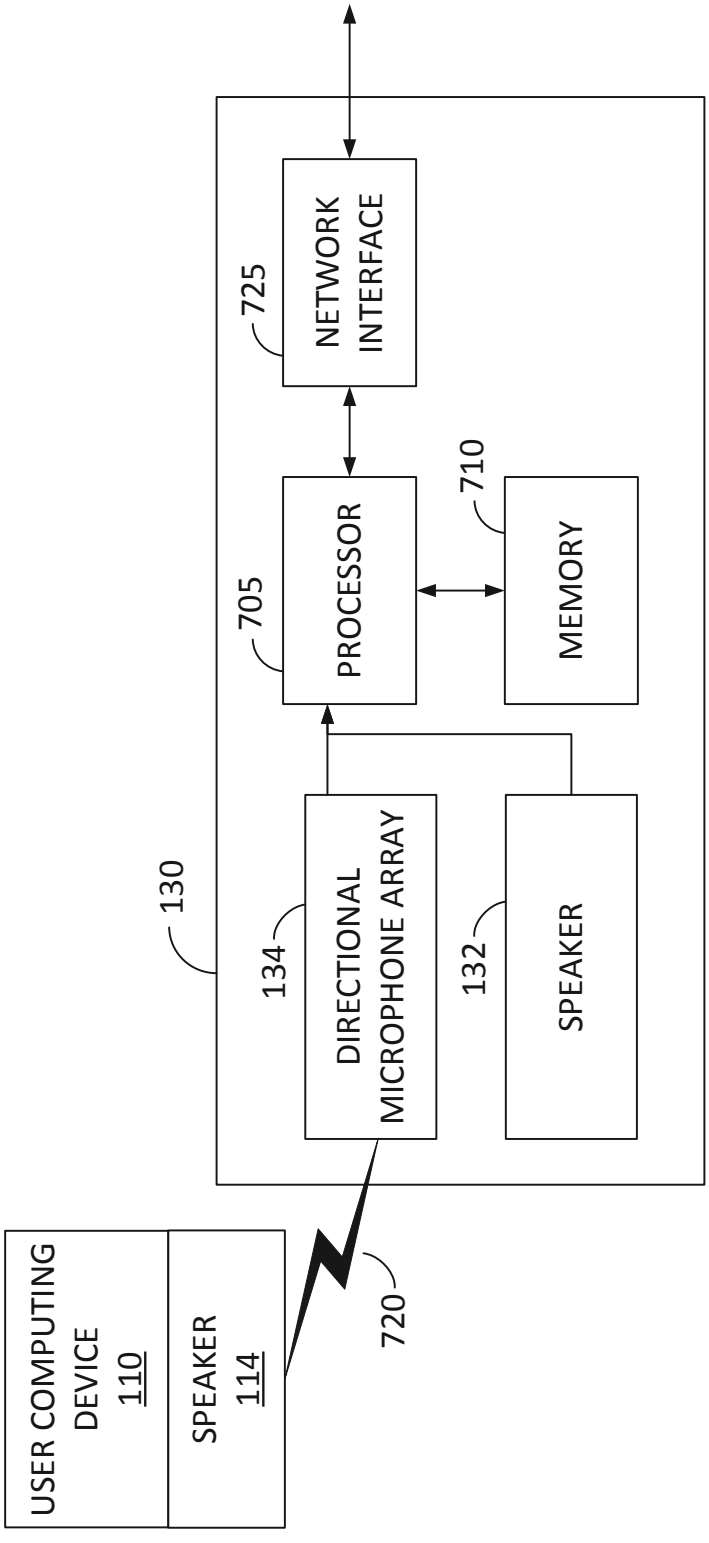
USER COMPUTING DEVICE 110
SPEAKER 114
720
130
134
DIRECTIONAL MICROPHONE ARRAY
132
SPEAKER
705
PROCESSOR
710
MEMORY
725
NETWORK INTERFACE

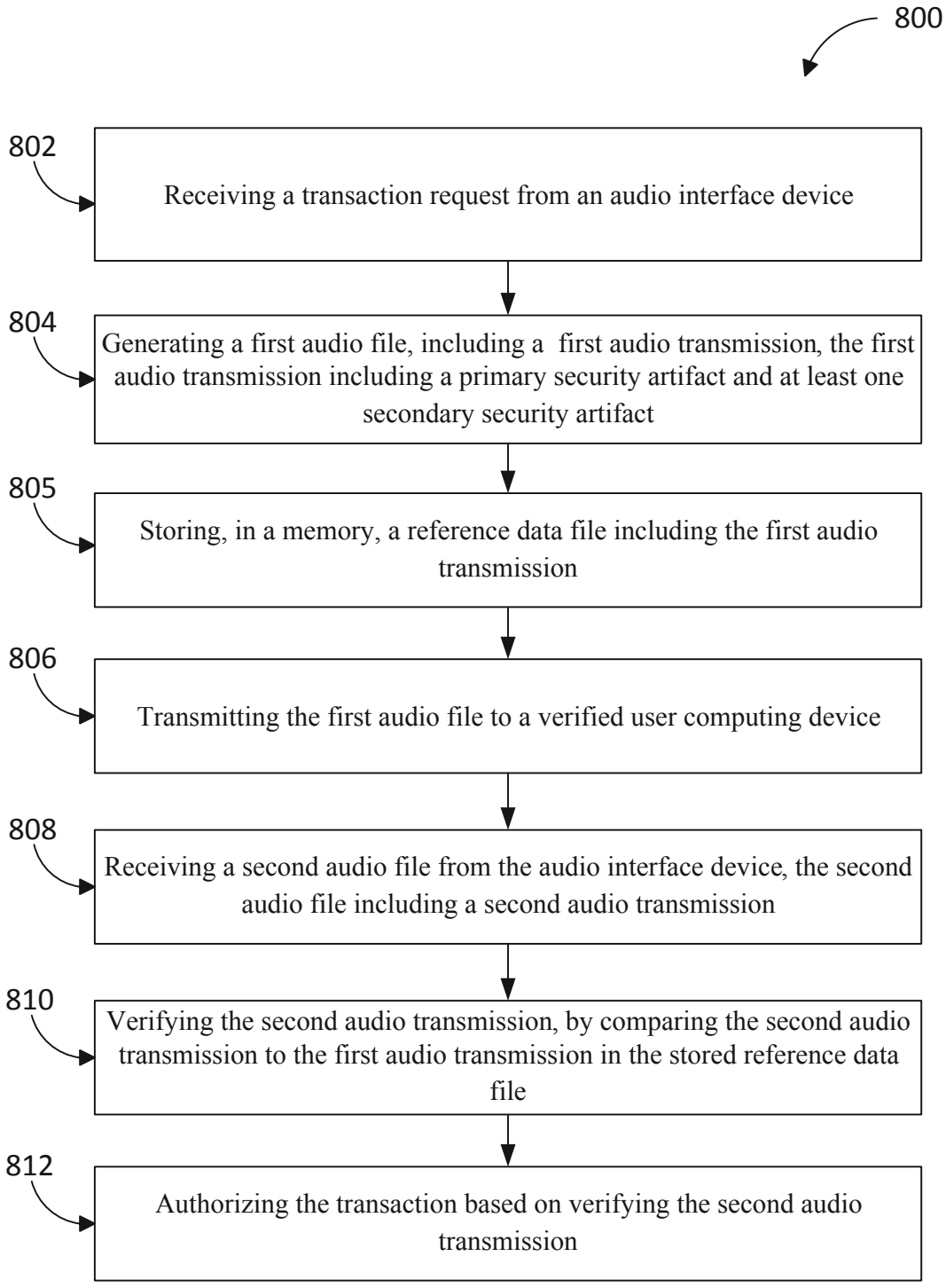
800
802
Receiving a transaction request from an audio interface device
804
Generating a first audio file, including a first audio transmission, the first audio transmission including a primary security artifact and at least one secondary security artifact
805
Storing, in a memory, a reference data file including the first audio transmission
806
Transmitting the first audio file to a verified user computing device
808
Receiving a second audio file from the audio interface device, the second audio file including a second audio transmission
810
Verifying the second audio transmission, by comparing the second audio transmission to the first audio transmission in the stored reference data file
812
Authorizing the transaction based on verifying the second audio transmission

FIG. 8