(12) INTERNATIONAL APPLICATION PUBLISHED UNDER THE PATENT COOPERATION TREATY (PCT)

(19) World Intellectual Property Organization
International Bureau

(43) International Publication Date
07 December 2023 (07.12.2023)

WIPO | PCT

(10) International Publication Number
WO 2023/233124 A1

(51) International Patent Classification:
B01D 53/32 (2006.01)

(21) International Application Number:
PCT/GB2023/051278

(22) International Filing Date:
16 May 2023 (16.05.2023)

(25) Filing Language: English

(26) Publication Language: English

(30) Priority Data:
2207934.7 30 May 2022 (30.05.2022) GB

(71) Applicant: **EDWARDS LIMITED** [GB/GB]; Innovation Drive, Burgess Hill Sussex RH15 9TW (GB).

(72) Inventors: **DEAN, Julian Richard**; Edwards Limited, Innovation Drive, Burgess Hill Sussex RH15 9TW (GB). **PITALE, Rohit Dilip**; Atlas Copco India Ltd, Atlas Copco GECIA, Survey No 247 / 2 Hinjewadi, Pune 411057 (IN).

(74) Agent: **FORD, Alexander**; Innovation Drive, Burgess Hill Sussex RH15 9TW (GB).

(81) Designated States *(unless otherwise indicated, for every kind of national protection available)*: AE, AG, AL, AM, AO, AT, AU, AZ, BA, BB, BG, BH, BN, BR, BW, BY, BZ, CA, CH, CL, CN, CO, CR, CU, CV, CZ, DE, DJ, DK, DM, DO, DZ, EC, EE, EG, ES, FI, GB, GD, GE, GH, GM, GT, HN, HR, HU, ID, IL, IN, IQ, IR, IS, IT, JM, JO, JP, KE, KG, KH, KN, KP, KR, KW, KZ, LA, LC, LK, LR, LS, LU, LY, MA, MD, MG, MK, MN, MU, MW, MX, MY, MZ, NA, NG, NI, NO, NZ, OM, PA, PE, PG, PH, PL, PT, QA, RO, RS, RU, RW, SA, SC, SD, SE, SG, SK, SL, ST, SV, SY, TH, TJ, TM, TN, TR, TT, TZ, UA, UG, US, UZ, VC, VN, WS, ZA, ZM, ZW.

(84) Designated States *(unless otherwise indicated, for every kind of regional protection available)*: ARIPO (BW, CV, GH, GM, KE, LR, LS, MW, MZ, NA, RW, SC, SD, SL, ST, SZ, TZ, UG, ZM, ZW), Eurasian (AM, AZ, BY, KG, KZ, RU, TJ, TM), European (AL, AT, BE, BG, CH, CY, CZ, DE, DK, EE, ES, FI, FR, GB, GR, HR, HU, IE, IS, IT, LT, LU, LV, MC, ME, MK, MT, NL, NO, PL, PT, RO, RS, SE, SI, SK, SM, TR), OAPI (BF, BJ, CF, CG, CI, CM, GA, GN, GQ, GW, KM, ML, MR, NE, SN, TD, TG).

Published:
— *with international search report (Art. 21(3))*

(54) Title: AN ABATEMENT SYSTEM FOR TREATMENT OF EXHAUST GASES OF A VACUUM PROCESSING SYSTEM

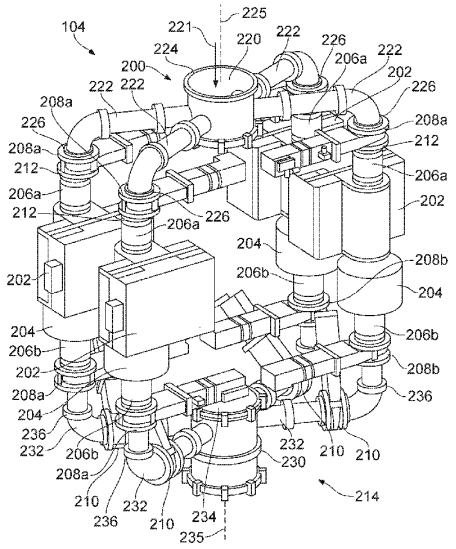

FIG. 2a

(57) Abstract: An abatement system (104) for treatment of exhaust gases of a vacuum processing system (100), the abatement system (104) comprising: an inlet manifold (200), the inlet manifold (200) comprising: a single fluid inlet (224) for receiving an exhaust gas stream from the vacuum processing system (102); and a plurality of fluid outlets (226) coupled to the fluid inlet (224); and a plurality of abatement devices (202) arranged to, in use, receive the exhaust gas stream from the inlet manifold (200); wherein each abatement device (202) of the plurality of abatement devices (202) is coupled to a respective fluid outlet (226) of the inlet manifold (200).

WO 2023/233124 A1