(12) INTERNATIONAL APPLICATION PUBLISHED UNDER THE PATENT COOPERATION TREATY (PCT)

(19) World Intellectual Property Organization
International Bureau

(43) International Publication Date
16 December 2010 (16.12.2010)

PCT

(10) International Publication Number
WO 2010/144563 A1

(51) International Patent Classification:
G21C 7/06 (2006.01)

(21) International Application Number:
PCT/US2010/037955

(22) International Filing Date:
9 June 2010 (09.06.2010)

(25) Filing Language: English

(26) Publication Language: English

(30) Priority Data:
61/185,887 10 June 2009 (10.06.2009) US
12/722,662 12 March 2010 (12.03.2010) US

(71) Applicant *(for all designated States except US)*: **BABCOCK & WILCOX NUCLEAR OPERATIONS GROUP, INC.** [US/US]; 24703 Euclid Avenue, Euclid, OH 44117 (US).

(72) Inventors; and

(75) Inventors/Applicants *(for US only)*: **STAMBAUCH, Kevin, J.** [US/US]; 32412 Lakeshore Boulevard, Willowick, OH 44095 (US). **DeSANTIS, Paul, K.** [US/US]; 36060 Cannon Road, Bentleyville, OH 44022 (US). **MACKOVJAK, Allan, R.** [US/US]; 4706 Wood Street, Willoughby, OH 44094 (US). **McLAUGHLIN, John, P.** [US/US]; 12580 Pinebrook Dirve, North Royalton, OH 44133 (US).

(74) Agent: **SEYMOUR, Michael, J.**; Babcock & Wilcox Power Generation Group, Inc., I.P. Dept. -BVCB2K, 20 S. Van Buren Avenue, Barberton, OH 44203 (US).

(81) Designated States *(unless otherwise indicated, for every kind of national protection available)*: AE, AG, AL, AM, AO, AT, AU, AZ, BA, BB, BG, BH, BR, BW, BY, BZ, CA, CH, CL, CN, CO, CR, CU, CZ, DE, DK, DM, DO, DZ, EC, EE, EG, ES, FI, GB, GD, GE, GH, GM, GT, HN, HR, HU, ID, IL, IN, IS, JP, KE, KG, KM, KN, KP, KR, KZ, LA, LC, LK, LR, LS, LT, LU, LY, MA, MD, ME, MG, MK, MN, MW, MX, MY, MZ, NA, NG, NI, NO, NZ, OM, PE, PG, PH, PL, PT, RO, RS, RU, SC, SD, SE, SG, SK, SL, SM, ST, SV, SY, TH, TJ, TM, TN, TR, TT, TZ, UA, UG, US, UZ, VC, VN, ZA, ZM, ZW.

[Continued on next page]

(54) Title: CONTROL ROD DRIVE MECHANISM FOR NUCLEAR REACTOR

(57) Abstract: A control rod drive mechanism (CRDM) for use in a nuclear reactor, the CRDM comprising: a connecting rod connected with at least one control rod; a lead screw; a drive mechanism configured to linearly translate the lead screw; an electromagnet coil assembly; and a latching assembly that latches the connecting rod to the lead screw responsive to energizing the electromagnet coil assembly and unlatches the connecting rod from the lead screw responsive to deenergizing the electromagnet coil assembly. The latching assembly is secured with and linearly translates with the lead screw, while the electromagnet coil assembly does not move with the lead screw. The electromagnet coil assembly is at least coextensive with a linear translation stroke over which the drive mechanism is configured to linearly translate the lead screw.

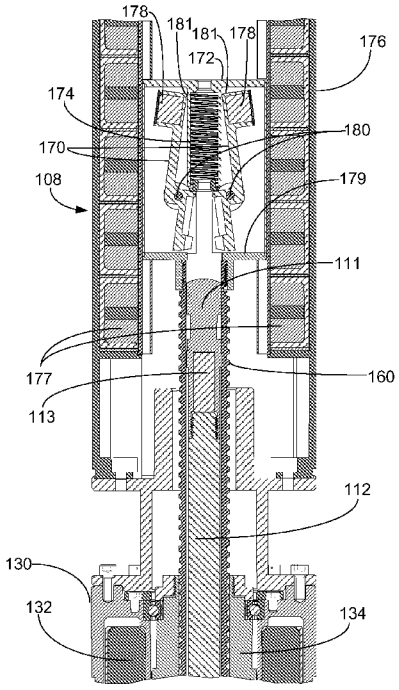

FIG. 11

WO 2010/144563 A1

(84) **Designated States** *(unless otherwise indicated, for every kind of regional protection available)*: ARIPO (BW, GH, GM, KE, LR, LS, MW, MZ, NA, SD, SL, SZ, TZ, UG, ZM, ZW), Eurasian (AM, AZ, BY, KG, KZ, MD, RU, TJ, TM), European (AL, AT, BE, BG, CH, CY, CZ, DE, DK, EE, ES, FI, FR, GB, GR, HR, HU, IE, IS, IT, LT, LU, LV, MC, MK, MT, NL, NO, PL, PT, RO, SE, SI, SK, SM, TR), OAPI (BF, BJ, CF, CG, CI, CM, GA, GN, GQ, GW, ML, MR, NE, SN, TD, TG).

Declarations under Rule 4.17:

— *as to applicant's entitlement to apply for and be granted a patent (Rule 4.17(ii))*

Published:

— *with international search report (Art. 21(3))*