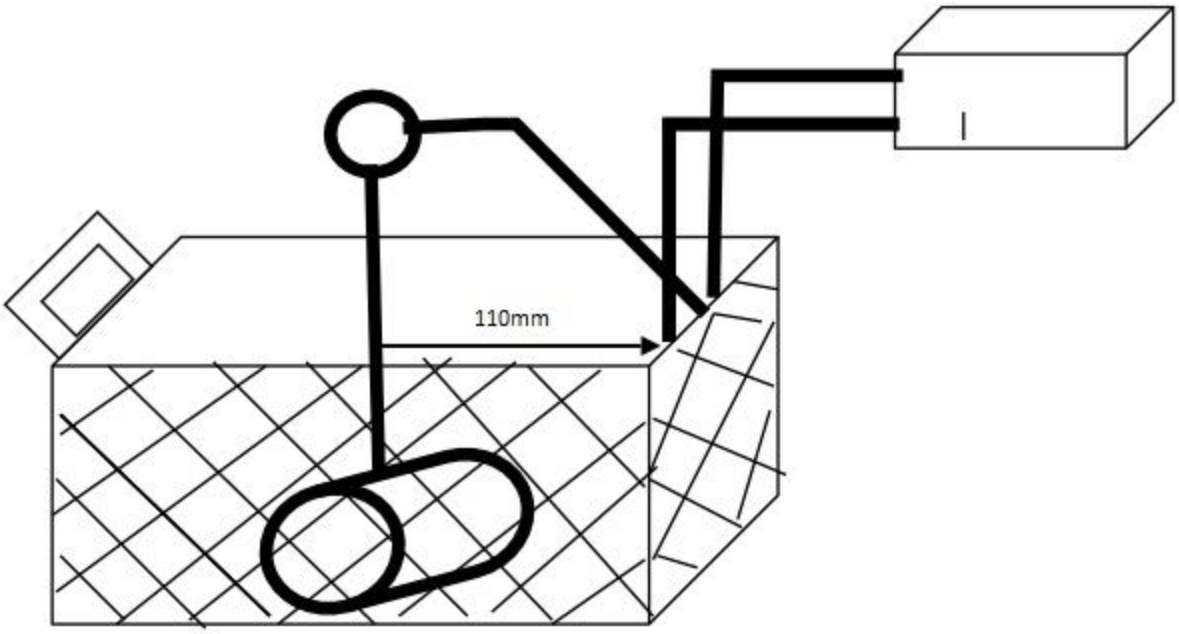

Figure 5 : Noodle cooking basket attached with pivoted cylindrical stirrer