[図1]

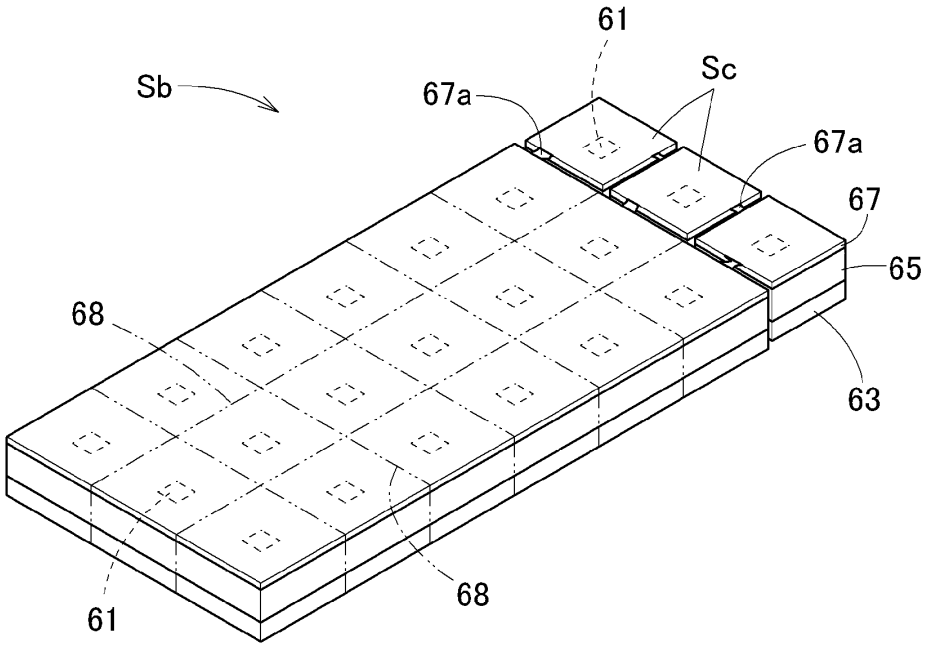

[図2]

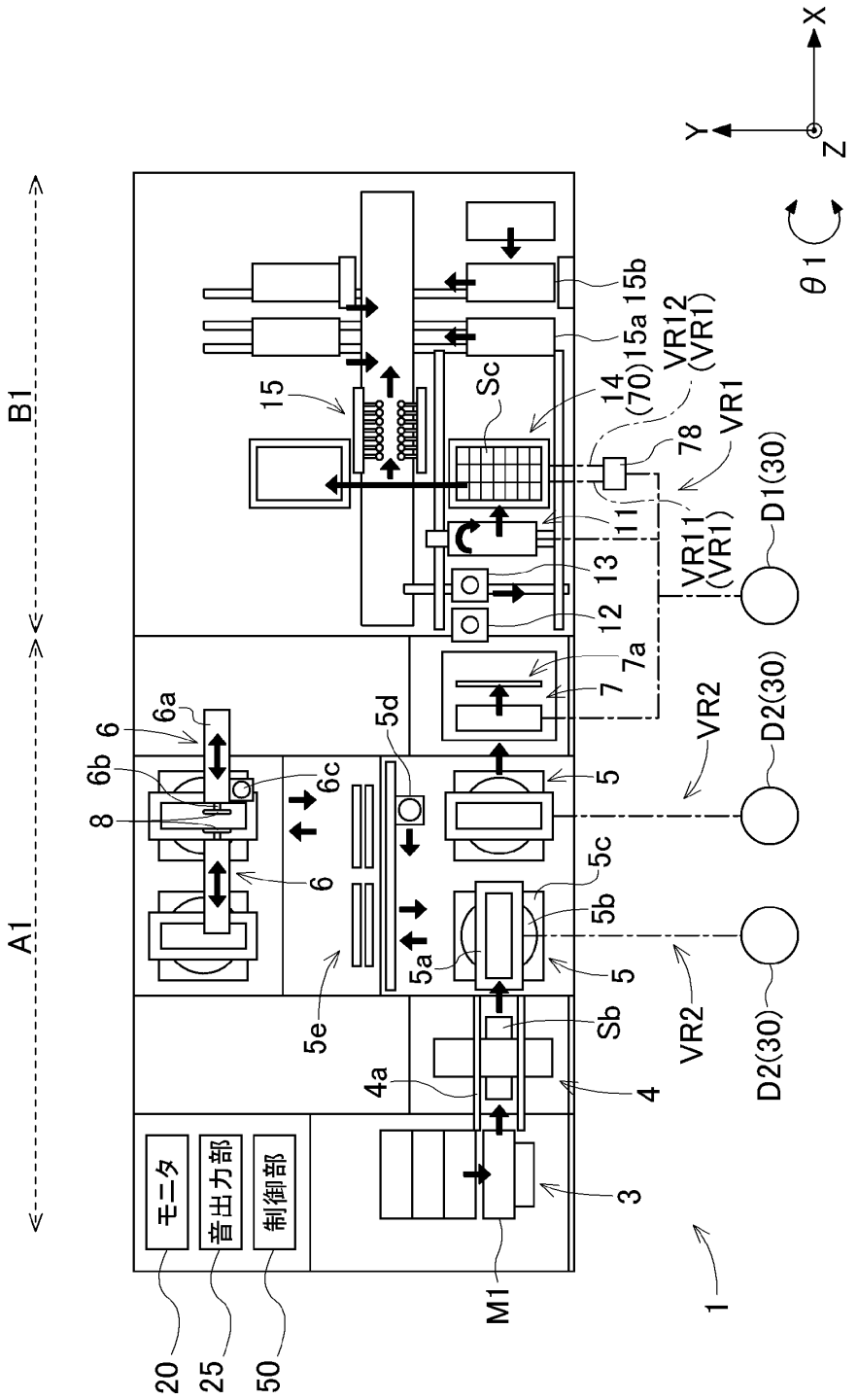
A1
B1
モニタ
音出力部
制御部
20
25
50
M1
3
4
4a
Sb
5
5a
5b
5c
5d
5e
6
6a
6b
6c
8
7
7a
12
13
11
14
(70)
15
15a
15b
Sc
78
VR1
VR11
(VR1)
VR12
(VR1)
VR2
D1(30)
D2(30)
D2(30)
1
X
Y
Z
θ1

[図3]

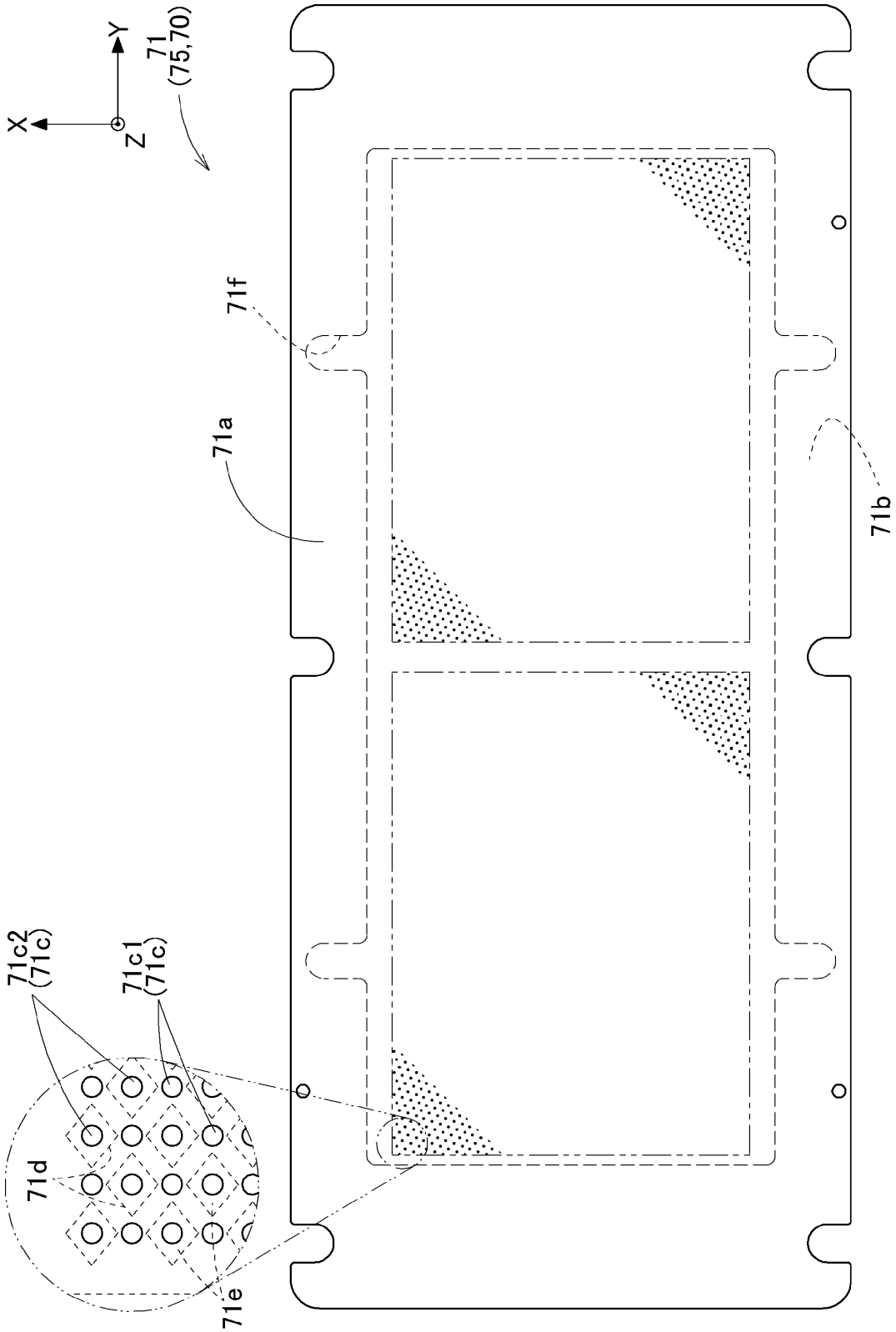

[図4]

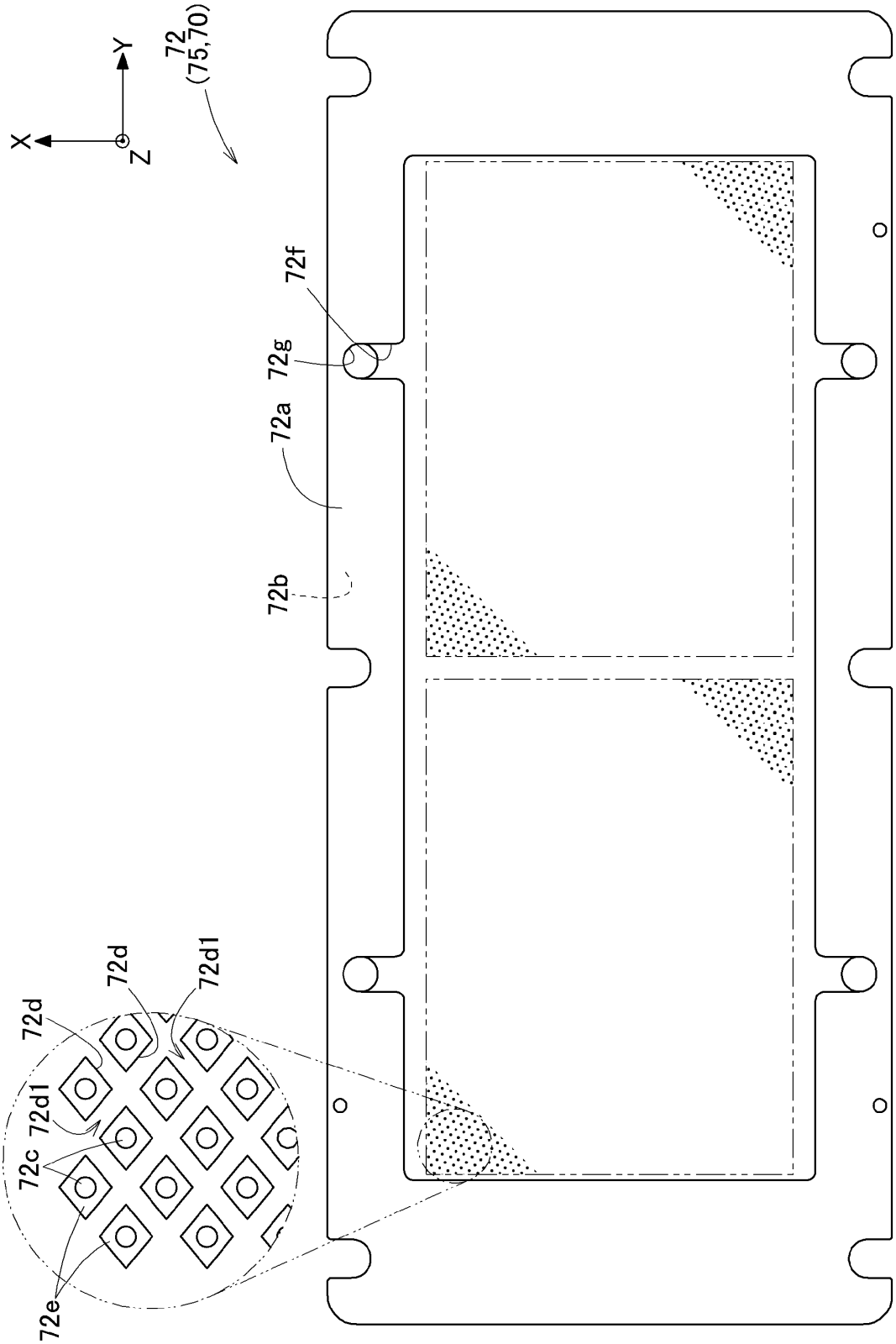

[図5]

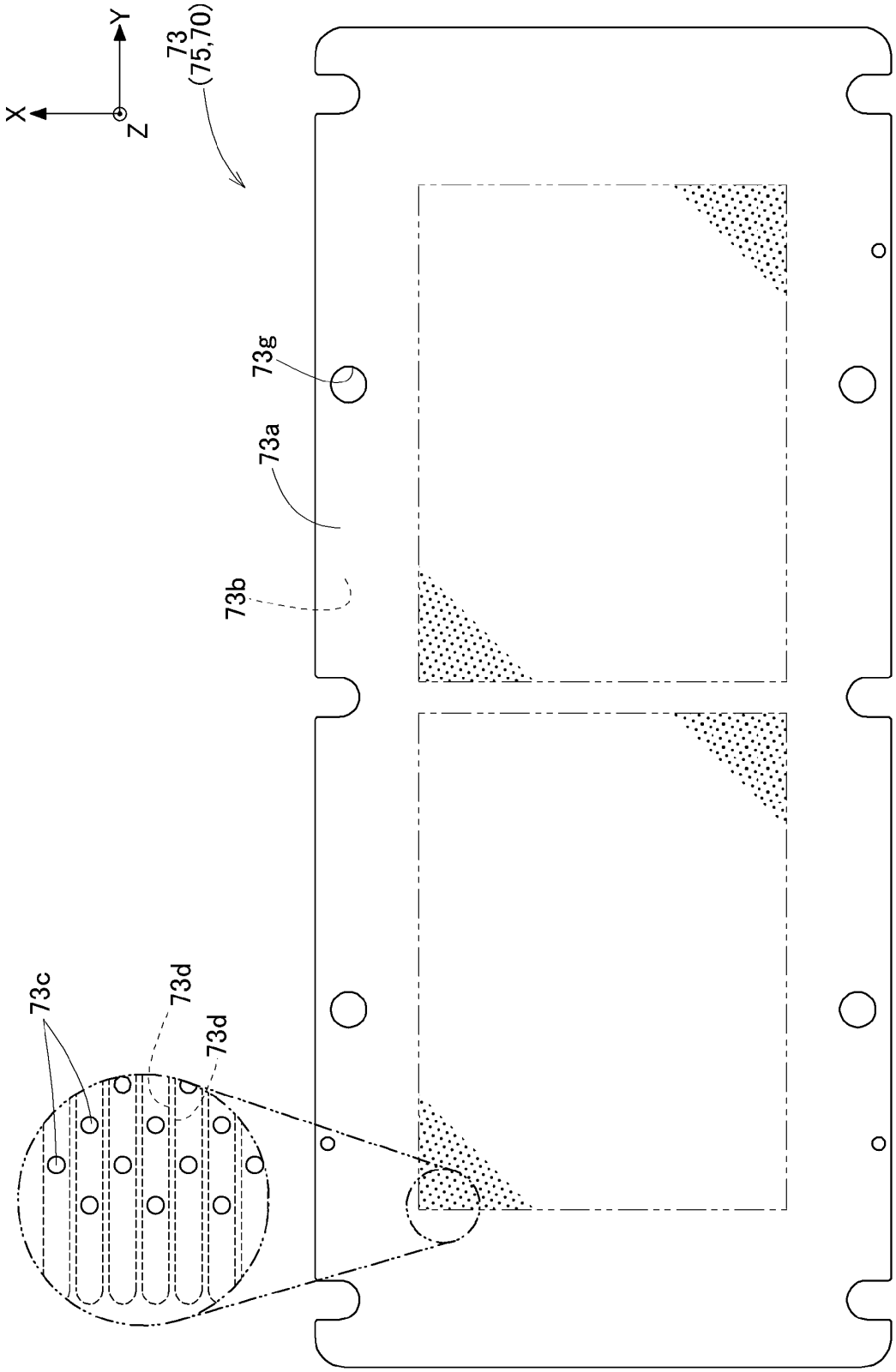

[図6]

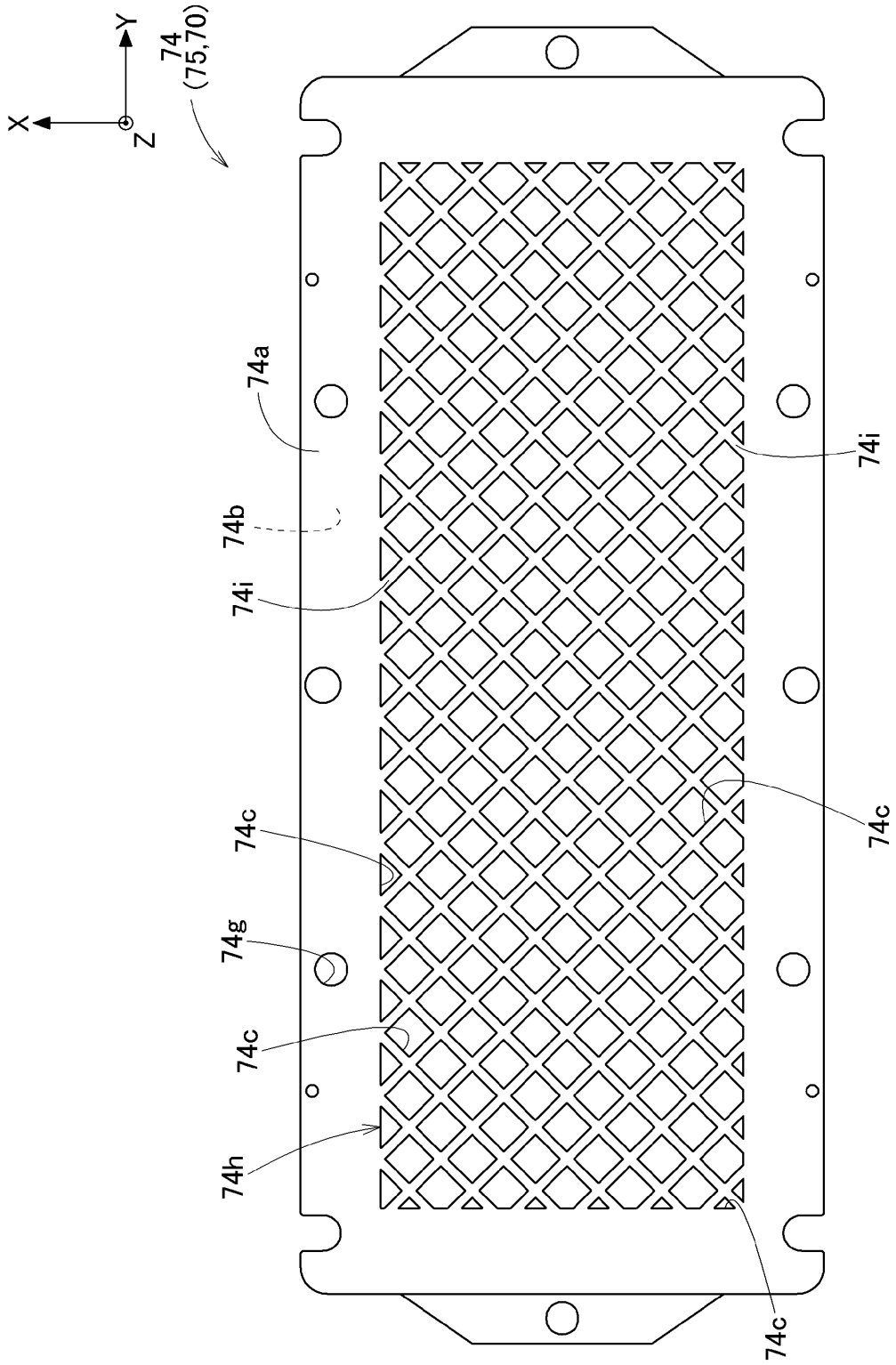

[図7]

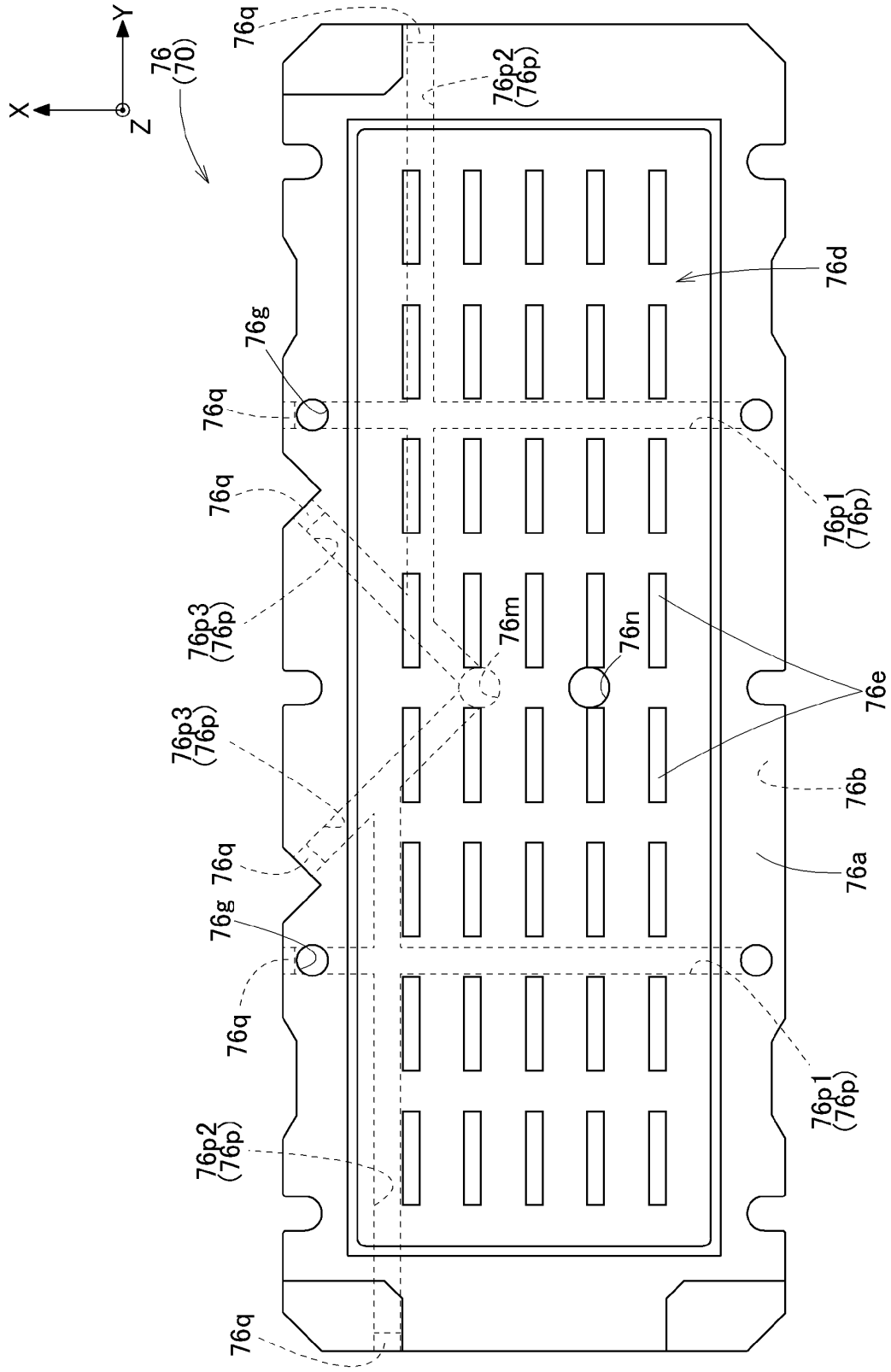
Y
X
Z
76
(70)
76q
76p2
(76p)
76d
76g
76q
76q
76p1
(76p)
76p3
(76p)
76m
76n
76e
76p3
(76p)
76b
76a
76q
76g
76q
76p1
(76p)
76p2
(76p)
76q

[図8]

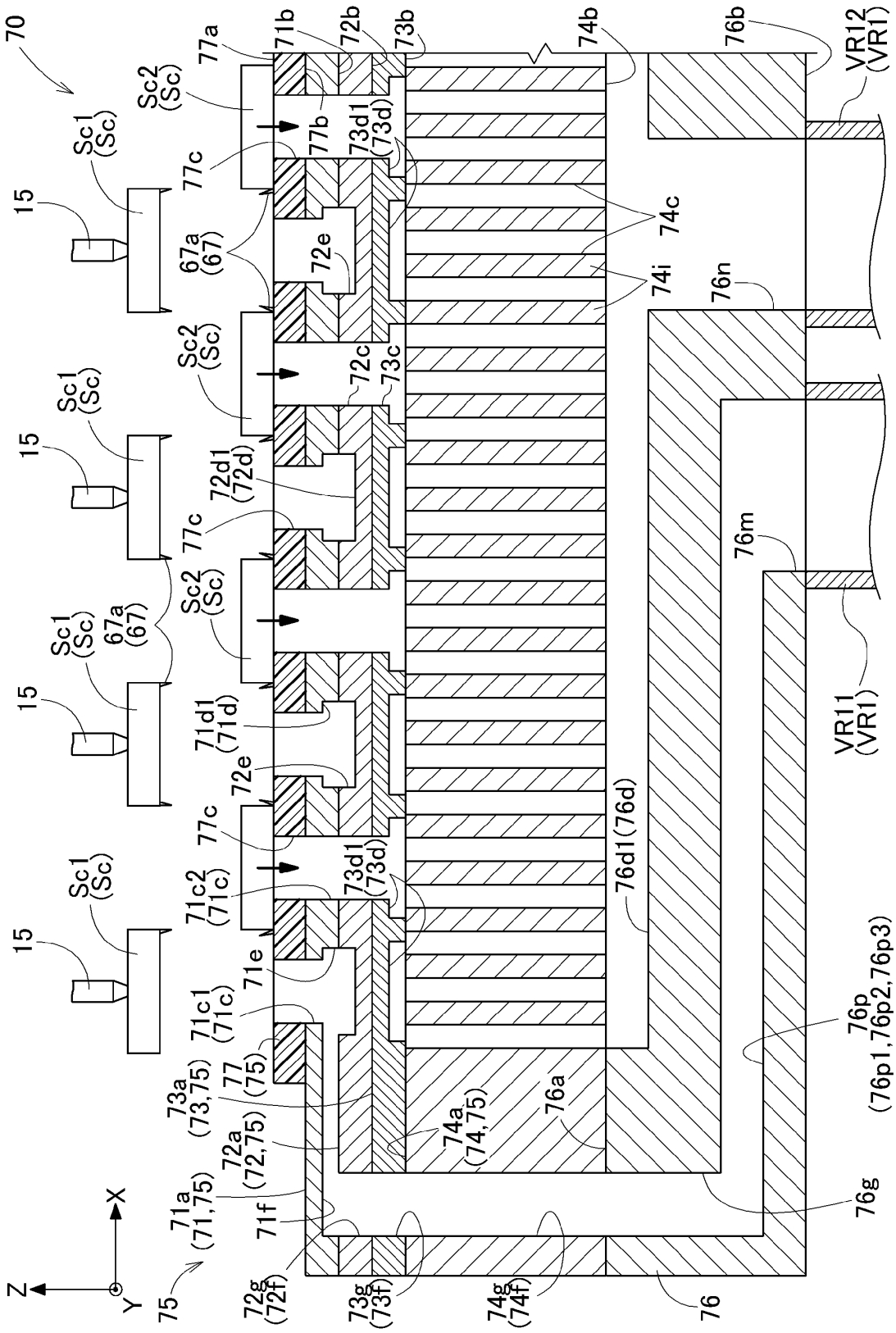
70
Sc1 (Sc)
Sc2 (Sc)
15
77a
71b
72b
73b
74b
76b
VR12 (VR1)
77b
73d1 (73d)
77c
67a (67)
72e
74c
74i
76n
72c
73c
72d1 (72d)
76m
71d1 (71d)
76d1(76d)
VR11 (VR1)
71c2 (71c)
71e
71c1 (71c)
77 (75)
73a (73,75)
74a (74,75)
76a
72a (72,75)
76p (76p1,76p2,76p3)
71a (71,75)
71f
76g
72g (72f)
73g (73f)
74g (74f)
76
75
X
Y
Z

[図9]

