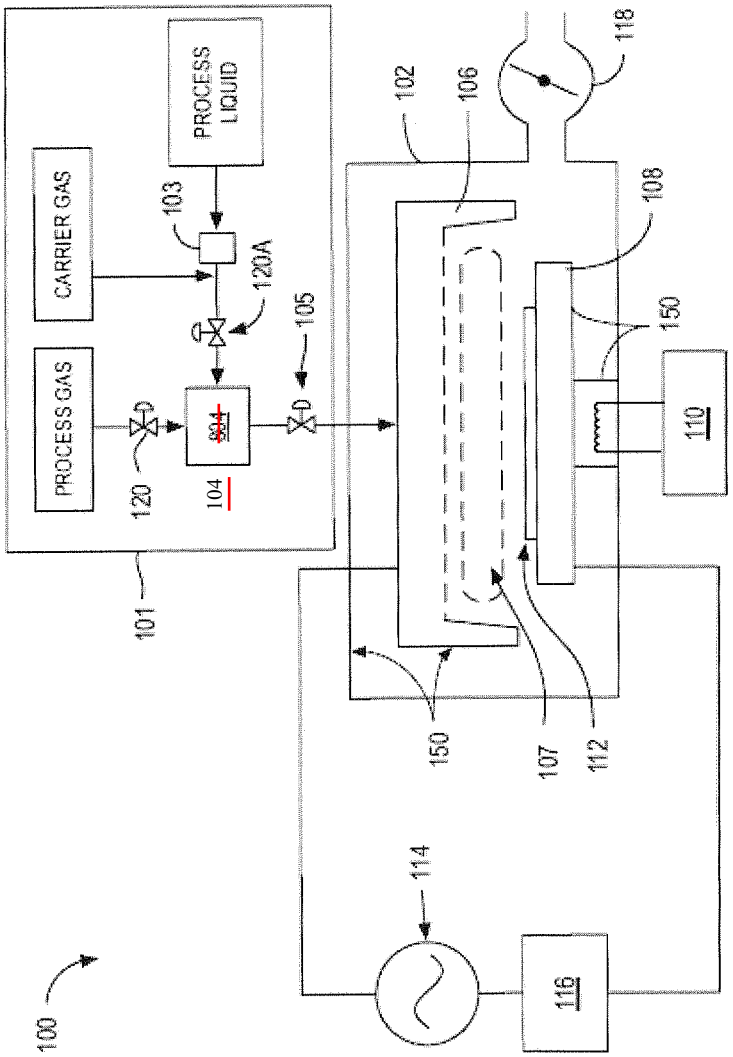
PROCESS LIQUID
CARRIER GAS
PROCESS GAS
103
120A
105
120
104
101
102
106
118
108
150
110
150
107
112
114
116
100

Figure 1