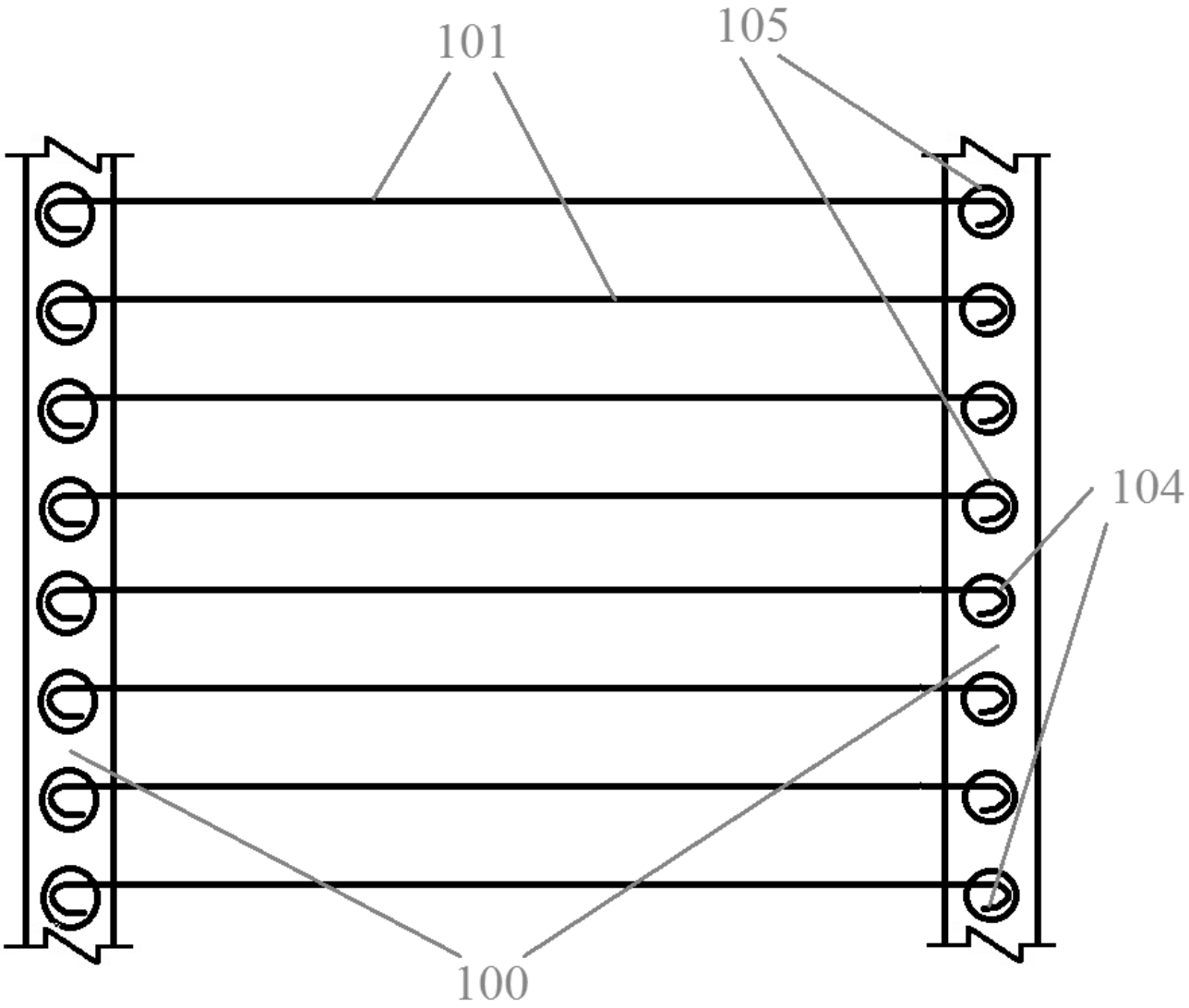

Figure 1
(Drawing is not to scale)

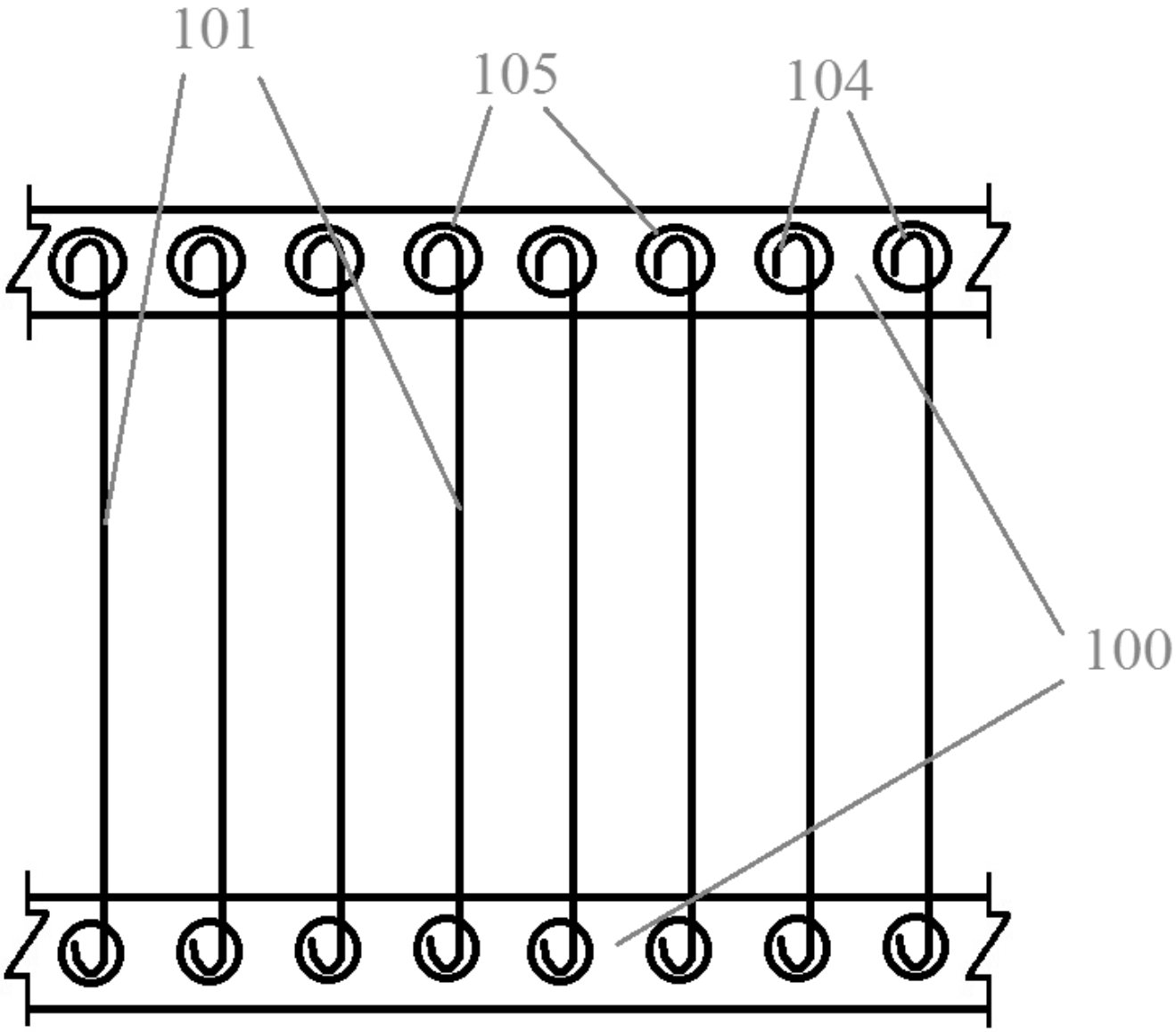

Figure 2
(Drawing is not to scale)

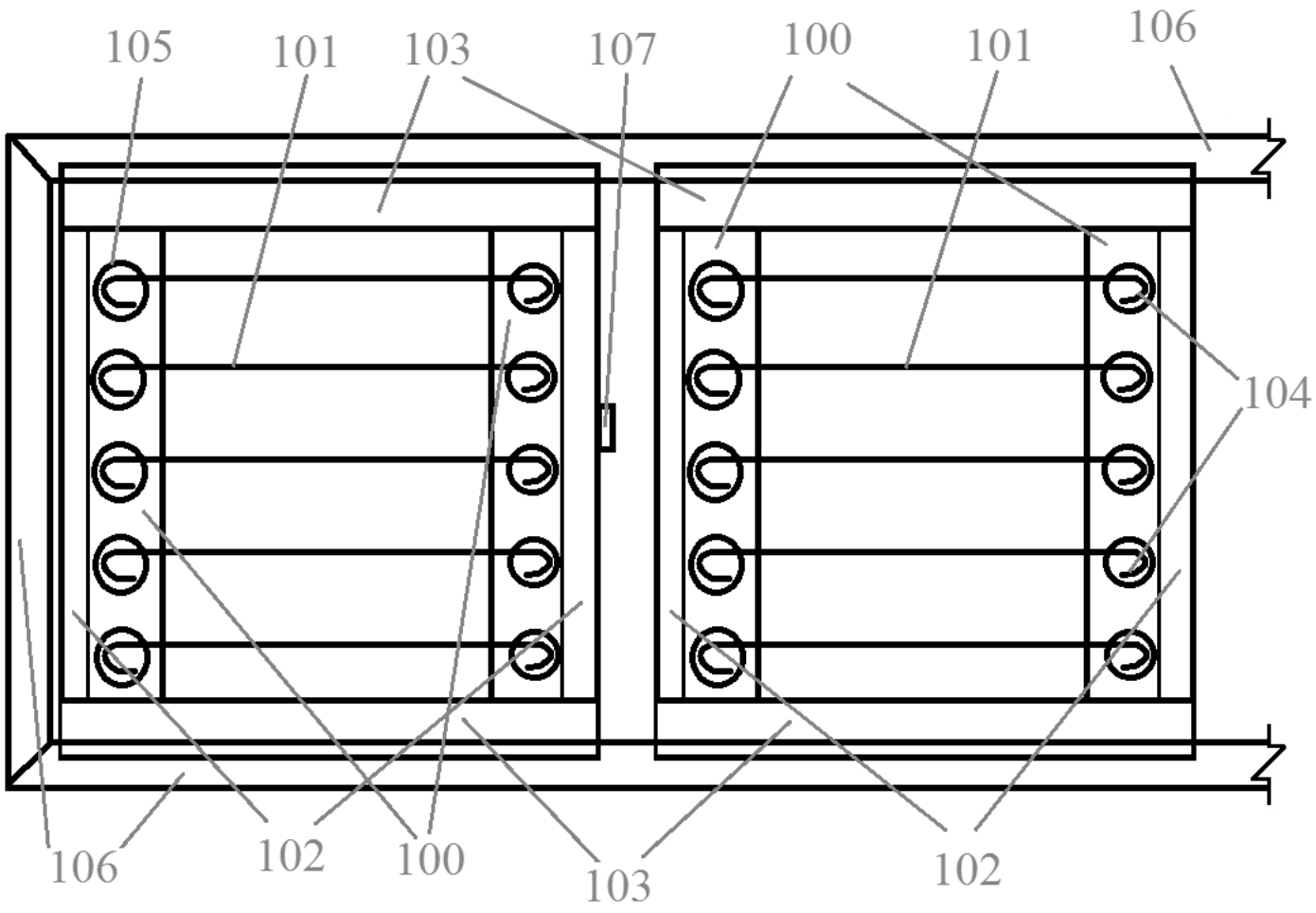

Figure 3
(Drawing is not to scale)

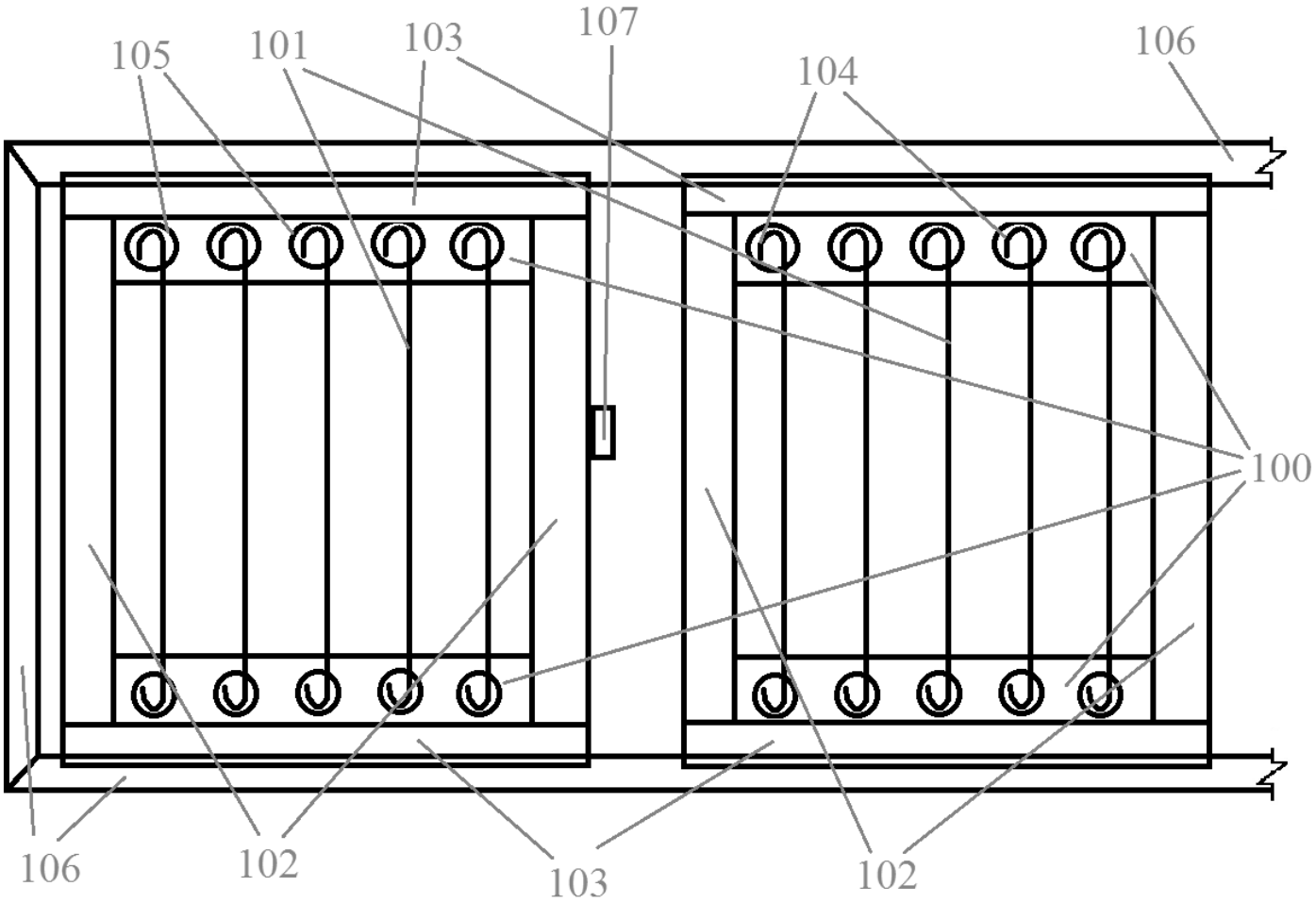

Figure 4
(Drawing is not to scale)

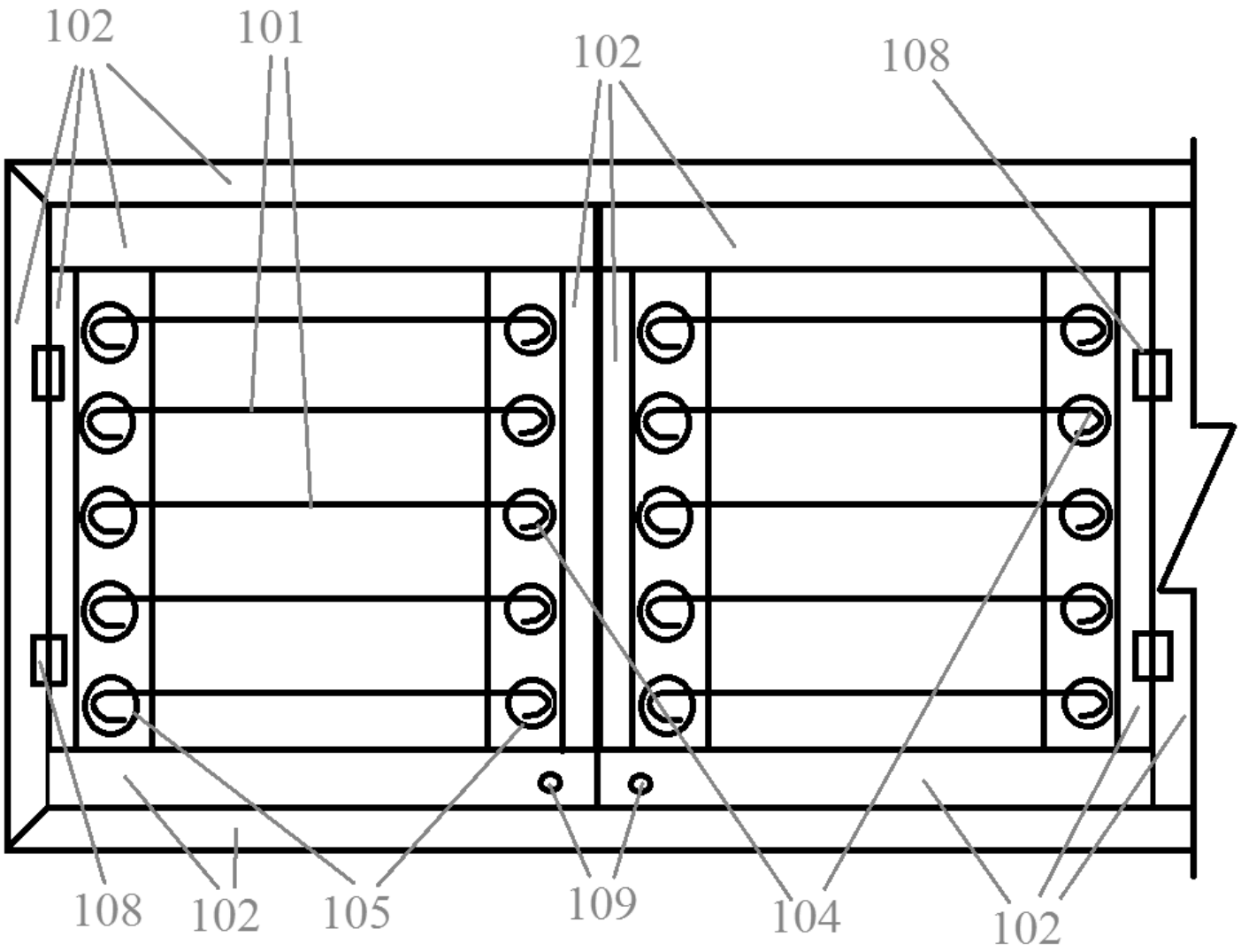

Figure 5
(Drawing is not to scale)

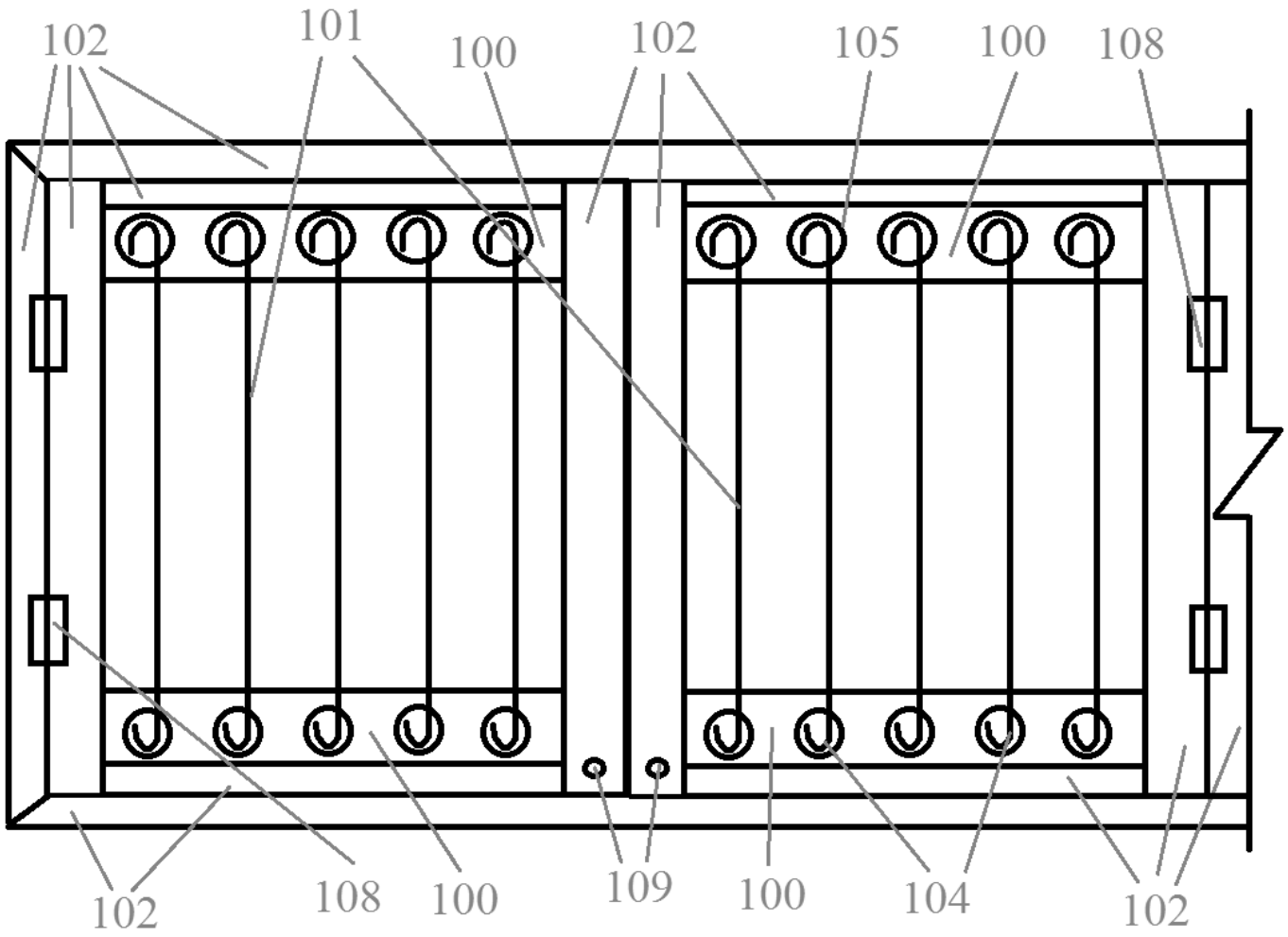

Figure 6
(Drawing is not to scale)

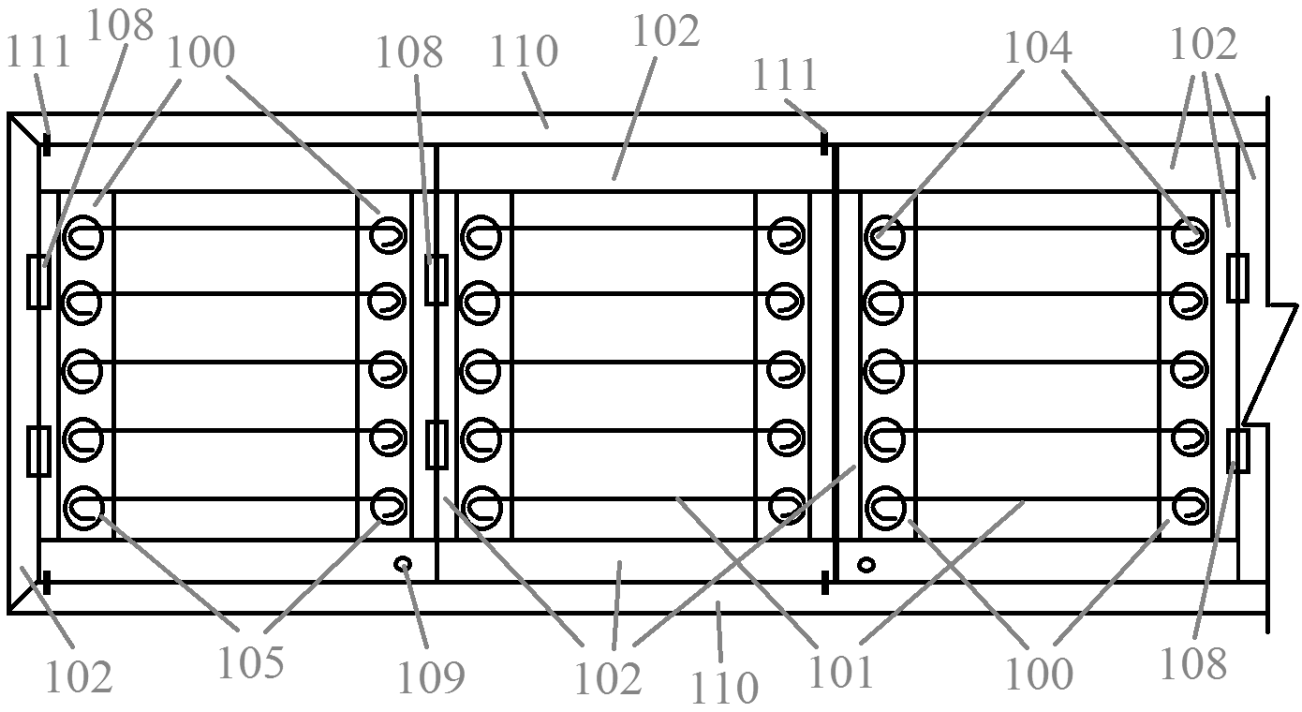

Figure 7
(Drawing is not to scale)

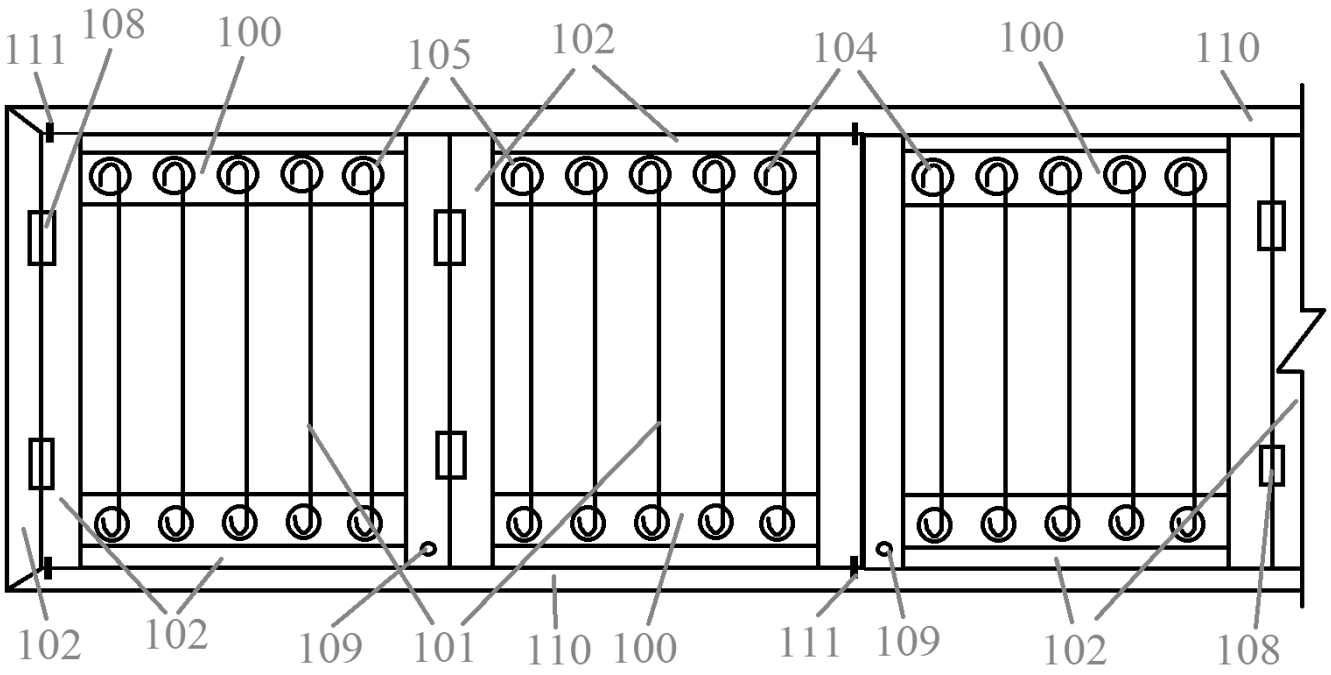

Figure 8
(Drawing is not to scale)