(12) INTERNATIONAL APPLICATION PUBLISHED UNDER THE PATENT COOPERATION TREATY (PCT)

(19) World Intellectual Property Organization
International Bureau

(43) International Publication Date
11 December 2008 (11.12.2008)

PCT

(10) International Publication Number
WO 2008/148834 A1

(51) International Patent Classification:
B65D 85/804 (2006.01) *A47J 31/40* (2006.01)

(21) International Application Number:
PCT/EP2008/056968

(22) International Filing Date: 5 June 2008 (05.06.2008)

(25) Filing Language: English

(26) Publication Language: English

(30) Priority Data:

07109579.8	5 June 2007 (05.06.2007)	EP
07109580.6	5 June 2007 (05.06.2007)	EP
08102147.9	29 February 2008 (29.02.2008)	EP
08102148.7	29 February 2008 (29.02.2008)	EP

(71) Applicant *(for all designated States except US)*: **NESTEC S.A.** [CH/CH]; Avenue Nestlé 55, CH-1800 Vevey (CH).

(72) Inventors; and

(75) Inventors/Applicants *(for US only)*: **YOAKIM, Alfred** [CH/CH]; Ch. de la Routiaz 2, CH-1806 St-legier-la Chiesaz (CH). **DENISART, Jean-Paul** [FR/CH]; Ch. de la Jaque 15, CH-1093 La Conversion (CH). **RYSER, Antoine** [CH/CH]; Rue du Simplon 19, CH-1006 Lausanne (CH). **PERENTES, Alexandre** [CH/CH]; Avenue Virgile Rossel 10, CH-1012 Lausanne (CH).

(74) Agent: **BORNE, Patrice**; Ave Nestlé 55, CH-1800 Vevey (CH).

(81) Designated States *(unless otherwise indicated, for every kind of national protection available)*: AE, AG, AL, AM, AO, AT, AU, AZ, BA, BB, BG, BH, BR, BW, BY, BZ, CA, CH, CN, CO, CR, CU, CZ, DE, DK, DM, DO, DZ, EC, EE, EG, ES, FI, GB, GD, GE, GH, GM, GT, HN, HR, HU, ID, IL, IN, IS, JP, KE, KG, KM, KN, KP, KR, KZ, LA, LC, LK, LR, LS, LT, LU, LY, MA, MD, ME, MG, MK, MN, MW, MX, MY, MZ, NA, NG, NI, NO, NZ, OM, PG, PH, PL, PT, RO, RS, RU, SC, SD, SE, SG, SK, SL, SM, SV, SY, TJ, TM, TN, TR, TT, TZ, UA, UG, US, UZ, VC, VN, ZA, ZM, ZW.

(84) Designated States *(unless otherwise indicated, for every kind of regional protection available)*: ARIPO (BW, GH, GM, KE, LS, MW, MZ, NA, SD, SL, SZ, TZ, UG, ZM, ZW), Eurasian (AM, AZ, BY, KG, KZ, MD, RU, TJ, TM), European (AT, BE, BG, CH, CY, CZ, DE, DK, EE, ES, FI, FR, GB, GR, HR, HU, IE, IS, IT, LT, LU, LV, MC, MT, NL, NO, PL, PT, RO, SE, SI, SK, TR), OAPI (BF, BJ, CF, CG, CI, CM, GA, GN, GQ, GW, ML, MR, NE, SN, TD, TG).

Declarations under Rule 4.17:

— *as to applicant's entitlement to apply for and be granted a patent (Rule 4.17(ii))*

— *as to the applicant's entitlement to claim the priority of the earlier application (Rule 4.17(iii))*

[Continued on next page]

(54) Title: CAPSULE AND METHOD FOR PREPARING A FOOD LIQUID BY CENTRIFUGATION

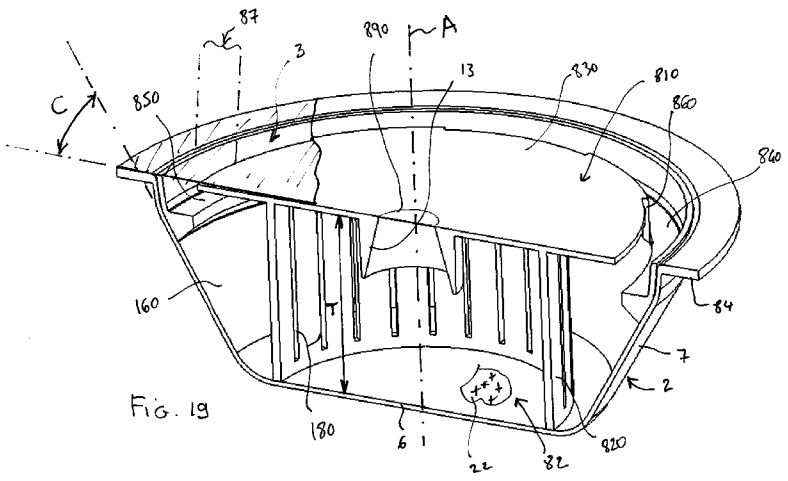

Fig. 19

(57) Abstract: A single-use capsule for preparing a food liquid from a food substance contained in the capsule by introducing water in the capsule and passing water through the substance using the centrifugal forces for producing the food liquid which is centrifuged peripherally in the capsule relatively to a central axis of the capsule corresponding to an axis of rotation during the centrifugation, comprising: an upper wall (3) and a bottom wall (6), a widening side wall (7) connecting to the upper and lower walls and, an enclosure (82) containing a predetermined amount of a food substance, wherein the upper wall comprises a peripheral outlet region (87) which is perforable and dedicated for providing outlets for the release of the liquid.

WO 2008/148834 A1

— *of inventorship (Rule 4.17(iv))*

Published:

— *with international search report*

— *before the expiration of the time limit for amending the claims and to be republished in the event of receipt of amendments*