FIG. 1

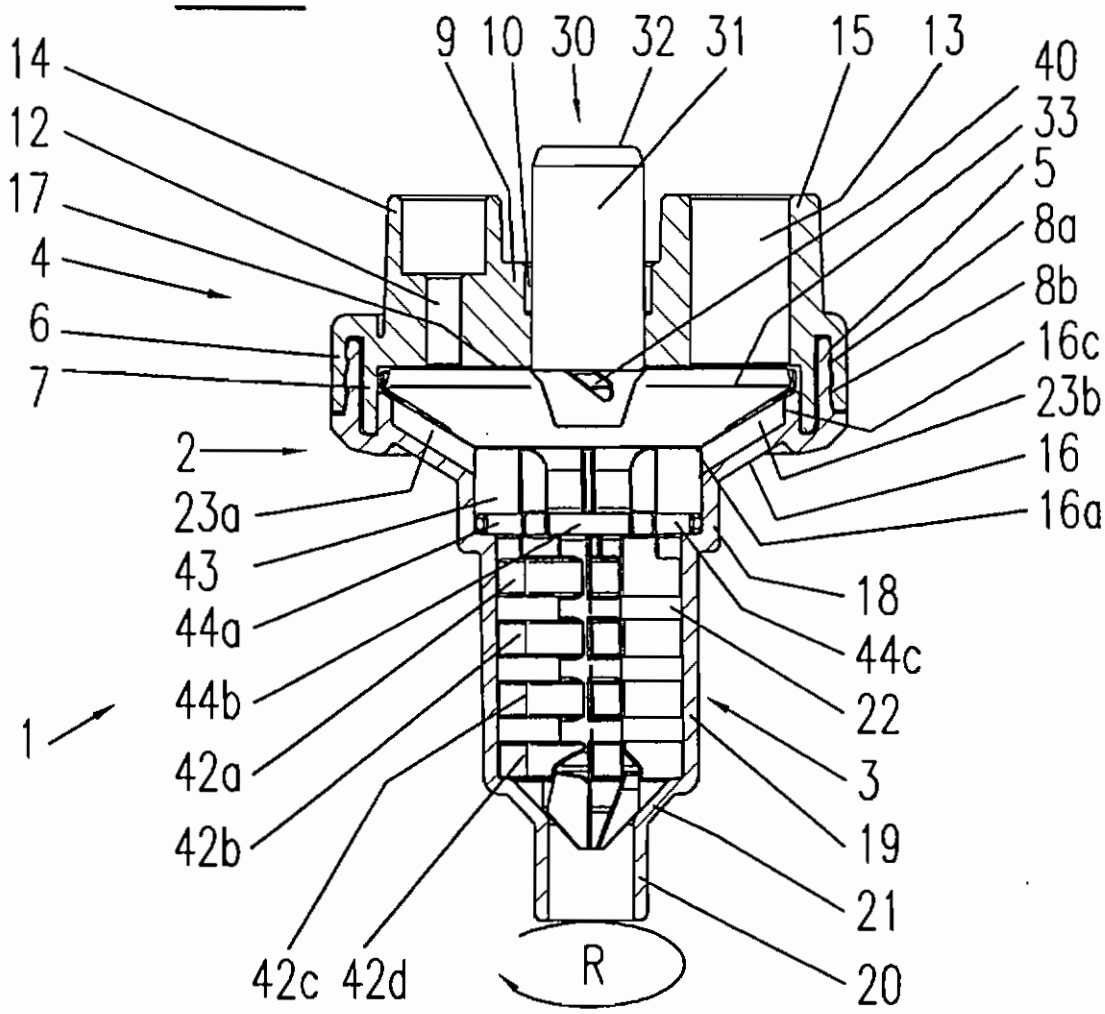
14
12
17
4
6
7
2
23a
43
44a
44b
42a
42b
42c
42d
1
9
10
30
32
31
15
13
40
33
5
8a
8b
16c
23b
16
16a
18
44c
22
3
19
21
20
R

FIG. 2

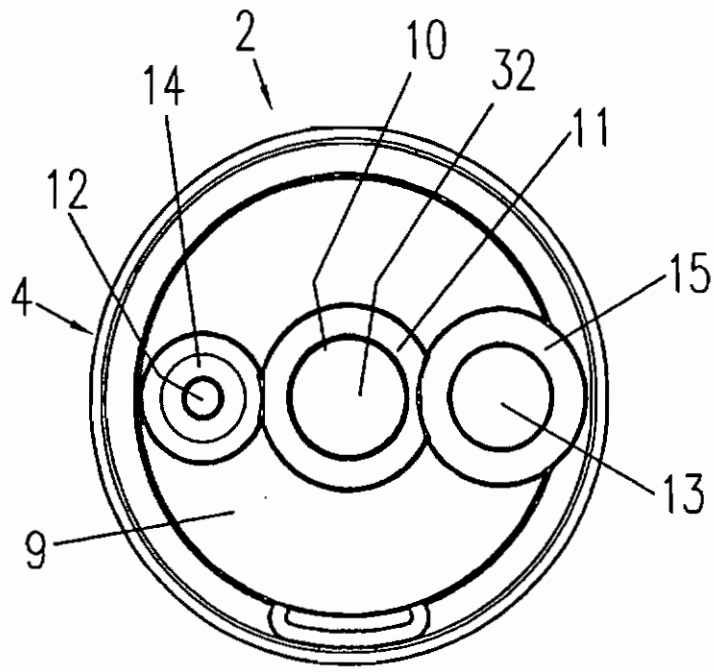
2
14
10
32
11
12
4
15
13
9

FIG. 3

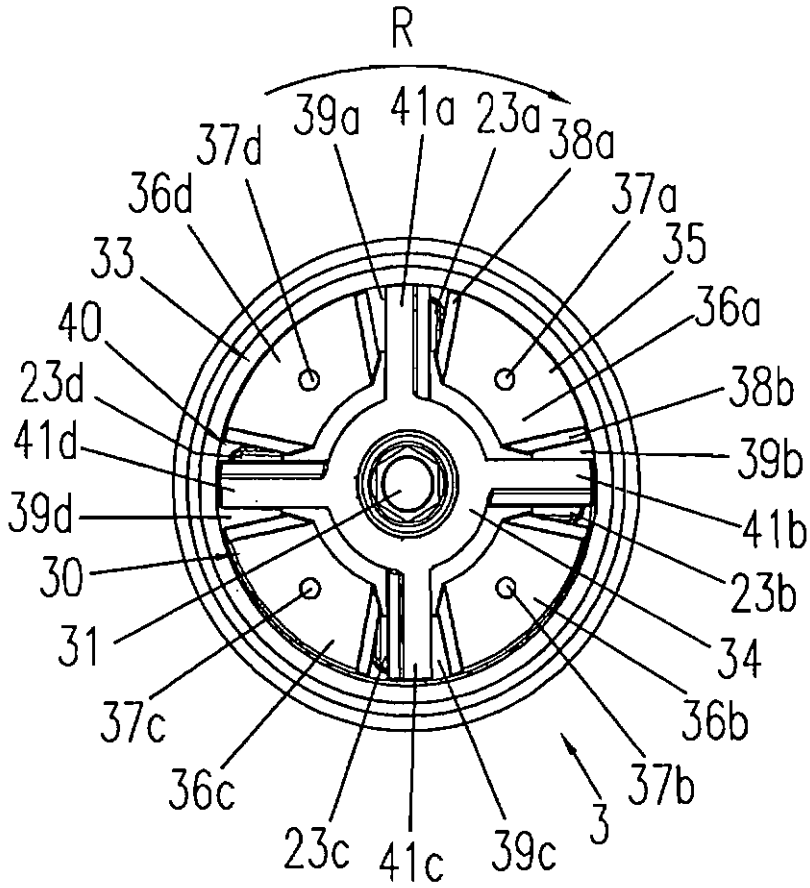
R
39a
41a
23a
38a
37d
36d
37a
35
33
36a
40
38b
23d
41d
39b
39d
41b
30
23b
31
34
37c
36b
36c
37b
23c
41c
39c
3

FIG. 4

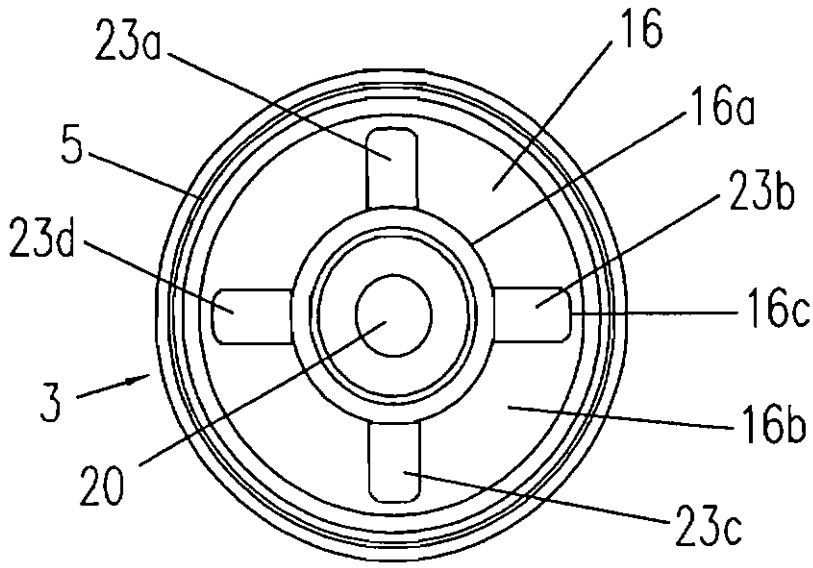
23a
16
16a
5
23b
23d
16c
3
16b
20
23c

FIG. 5

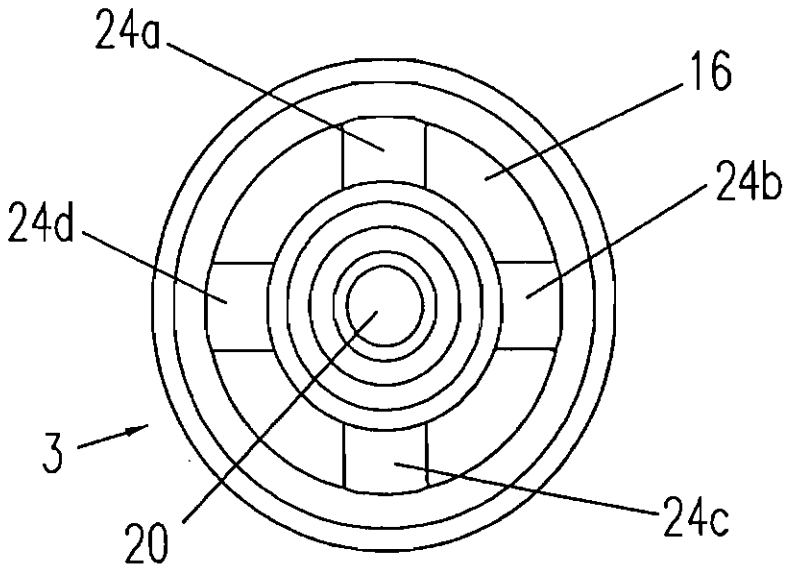

FIG. 6

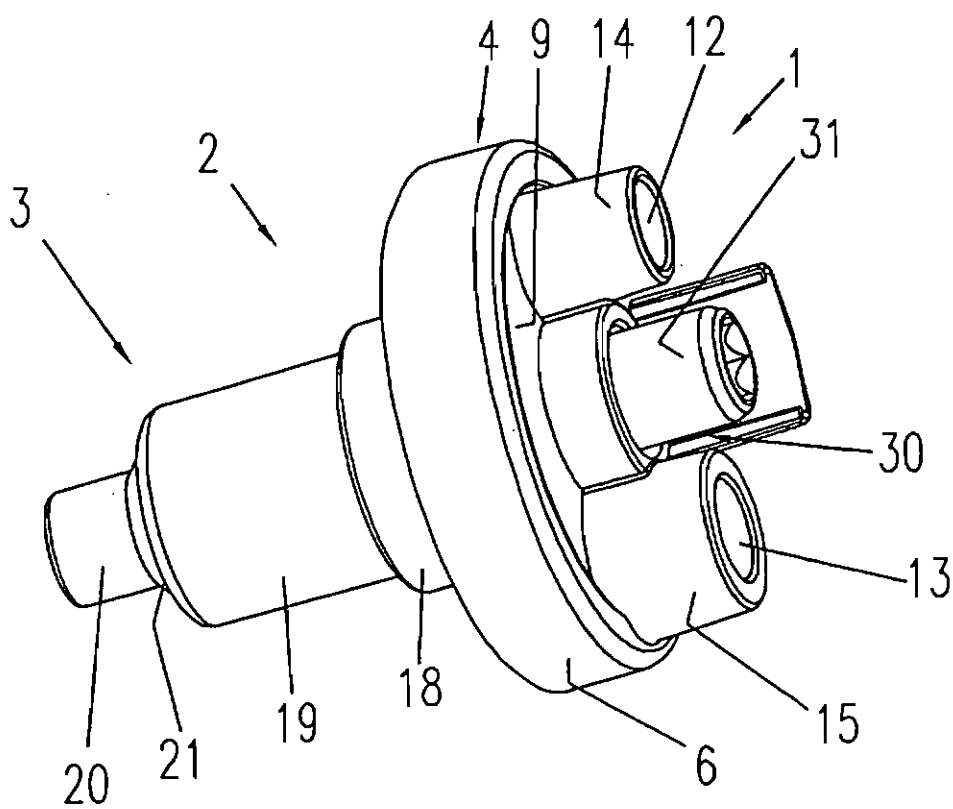

FIG. 7

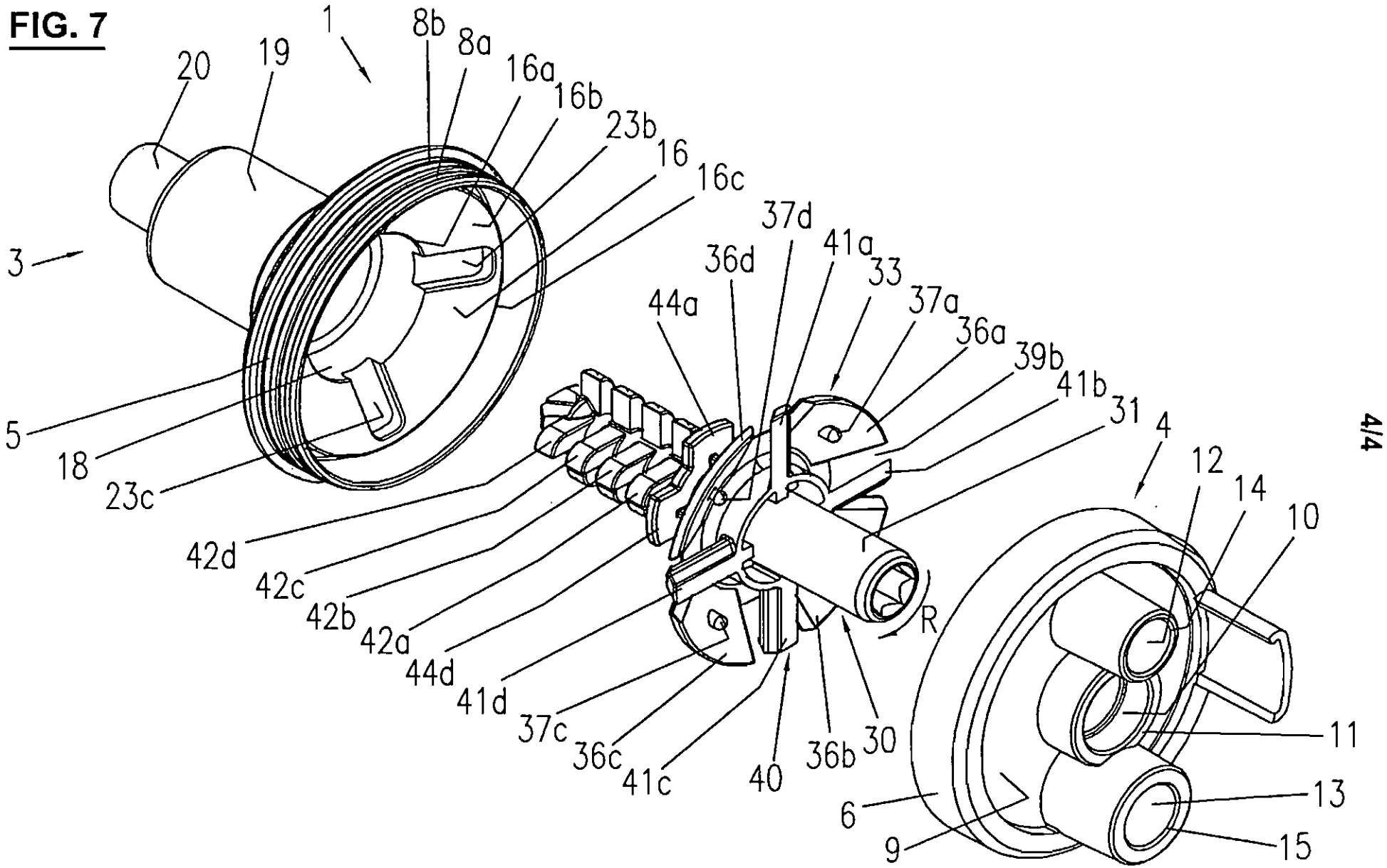
1
8b
8a
16a
16b
23b
16
16c
20
19
3
5
18
23c
42d
42c
42b
42a
44d
41d
37c
36c
41c
40
36b
30
6
9
44a
36d
37d
41a
33
37a
36a
39b
41b
31
4
12
14
10
11
13
15
R