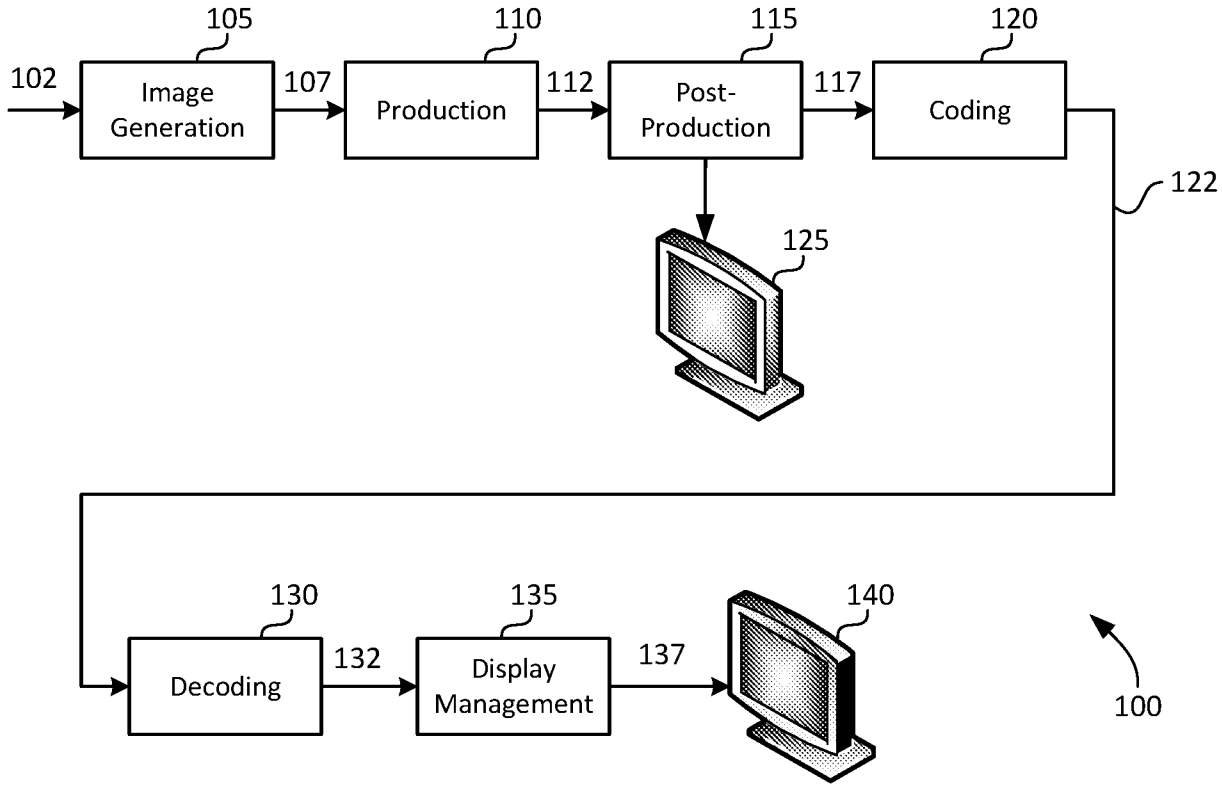

FIG. 1A

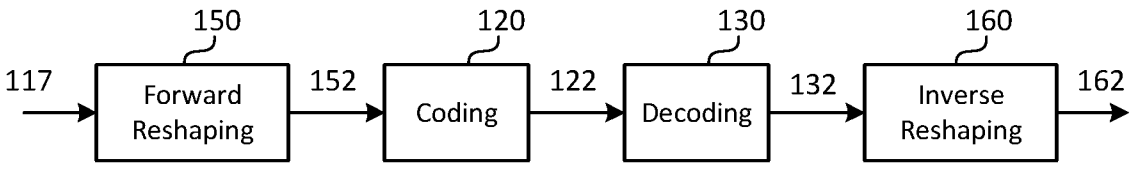

Prior Art

FIG. 1B

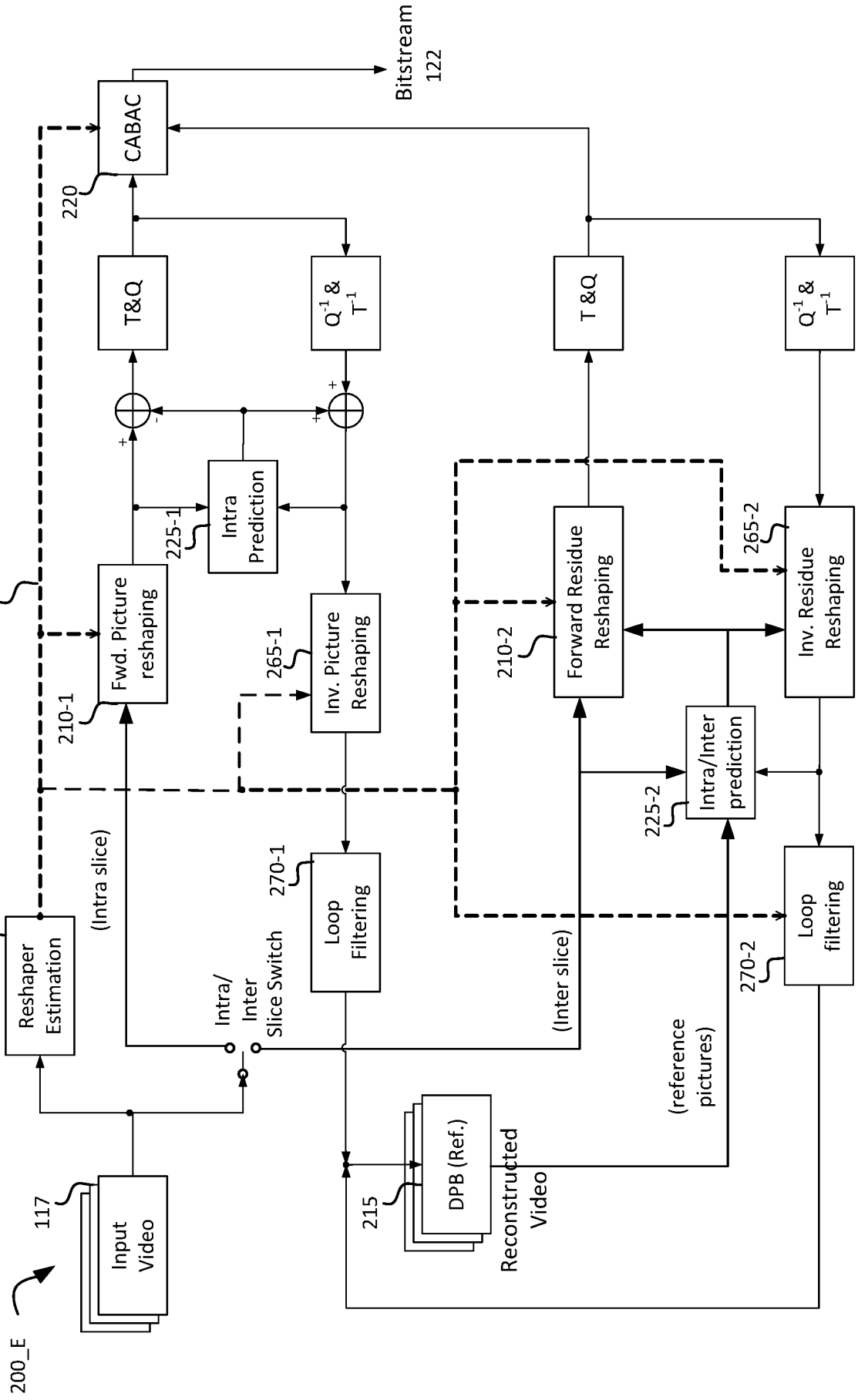
200_E
Input Video
117
Reshaper Estimation
205
207
Fwd. Picture reshaping
210-1
Forward Residue Reshaping
210-2
Intra Prediction
225-1
Intra/Inter prediction
225-2
Inv. Picture Reshaping
265-1
Inv. Residue Reshaping
265-2
Loop Filtering
270-1
Loop filtering
270-2
T&Q
T &Q
CABAC
220
Bitstream 122
Q^{-1} & T^{-1}
Q^{-1} & T^{-1}
Intra/ Inter Slice Switch
(Intra slice)
(Inter slice)
(reference pictures)
DPB (Ref.)
215
Reconstructed Video

FIG. 2A

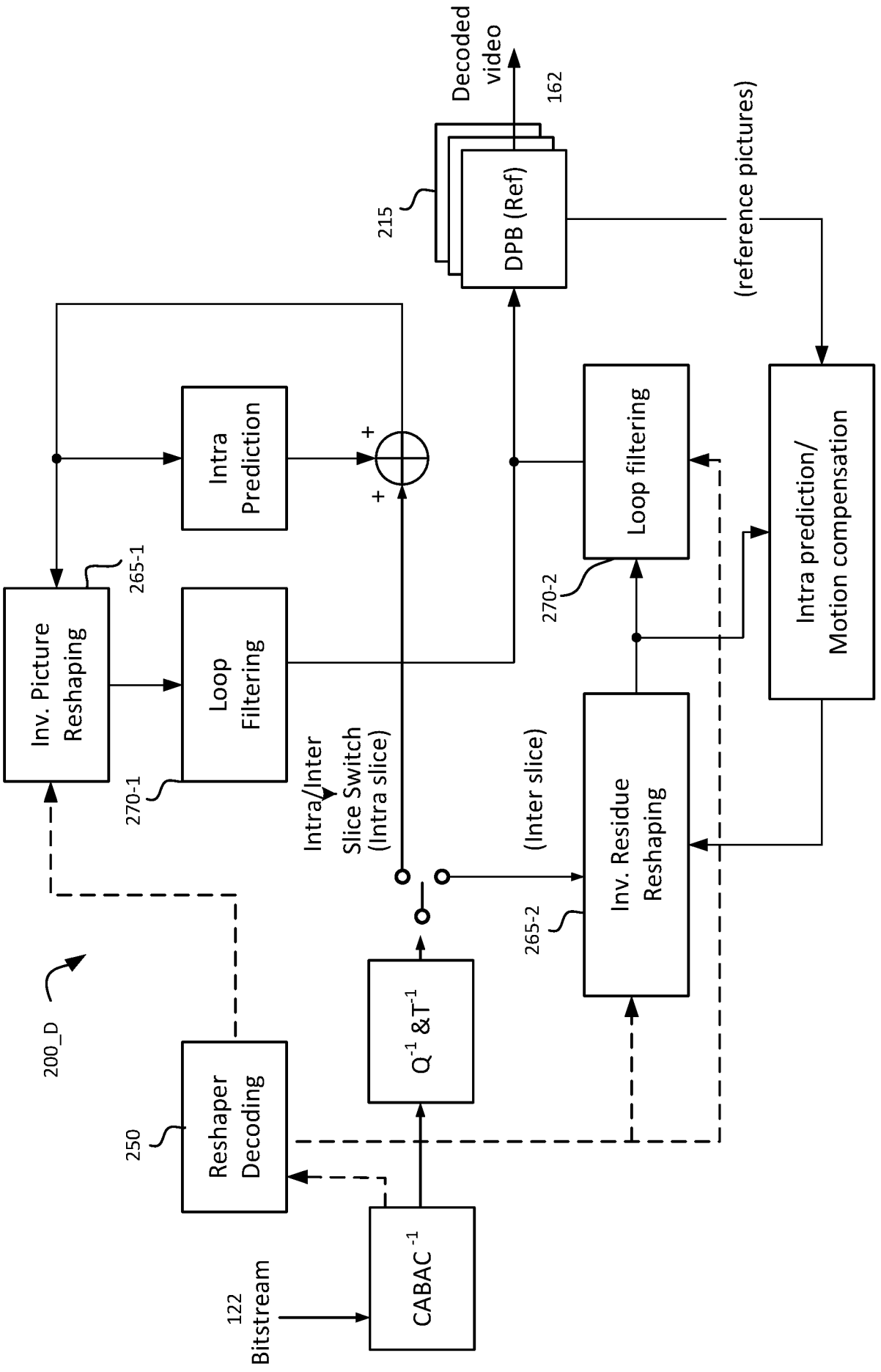
122
Bitstream
CABAC -1
250
Reshaper Decoding
200_D
Q-1 &T-1
Intra/Inter Slice Switch (Intra slice)
(Inter slice)
265-2
Inv. Residue Reshaping
270-1
Loop Filtering
265-1
Inv. Picture Reshaping
Intra Prediction
+
+
270-2
Loop filtering
Intra prediction/ Motion compensation
215
DPB (Ref)
162
Decoded video
(reference pictures)

FIG. 2B

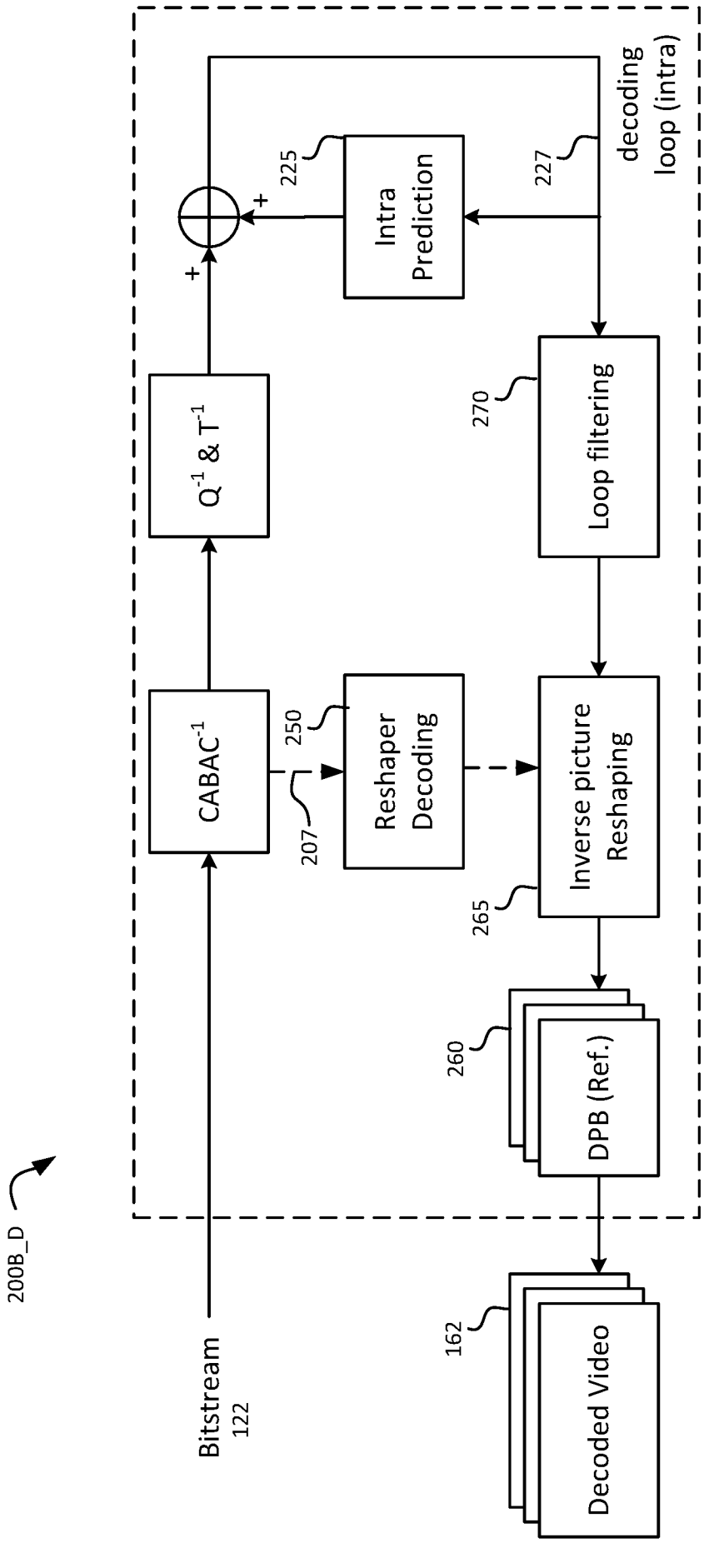
200B_D
Bitstream
122
CABAC^{-1}
Q^{-1} & T^{-1}
+
+
Intra Prediction
225
227
decoding loop (intra)
Loop filtering
270
Reshaper Decoding
250
207
Inverse picture Reshaping
265
DPB (Ref.)
260
Decoded Video
162

FIG. 2C

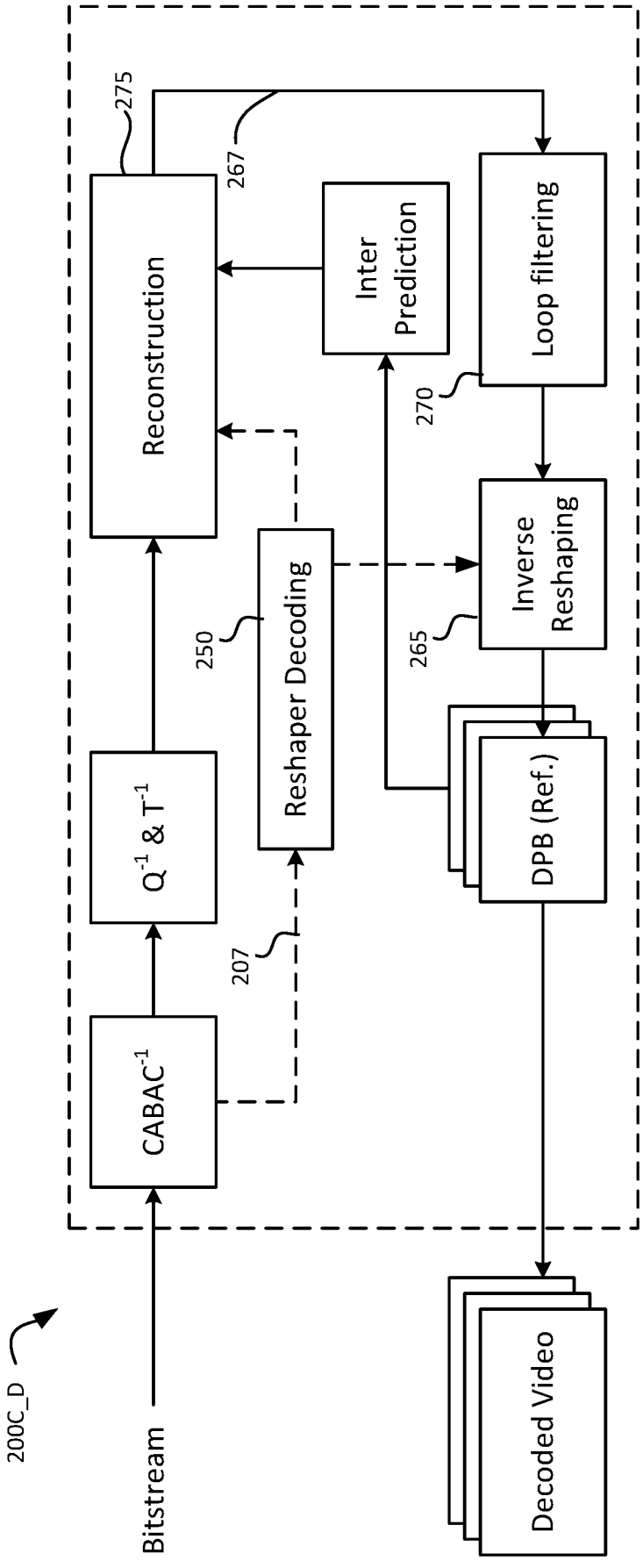
200C_D
Bitstream
CABAC^{-1}
Q^{-1} & T^{-1}
Reconstruction
275
267
Inter Prediction
Loop filtering
270
Reshaper Decoding
250
207
Inverse Reshaping
265
DPB (Ref.)
Decoded Video

FIG. 2D

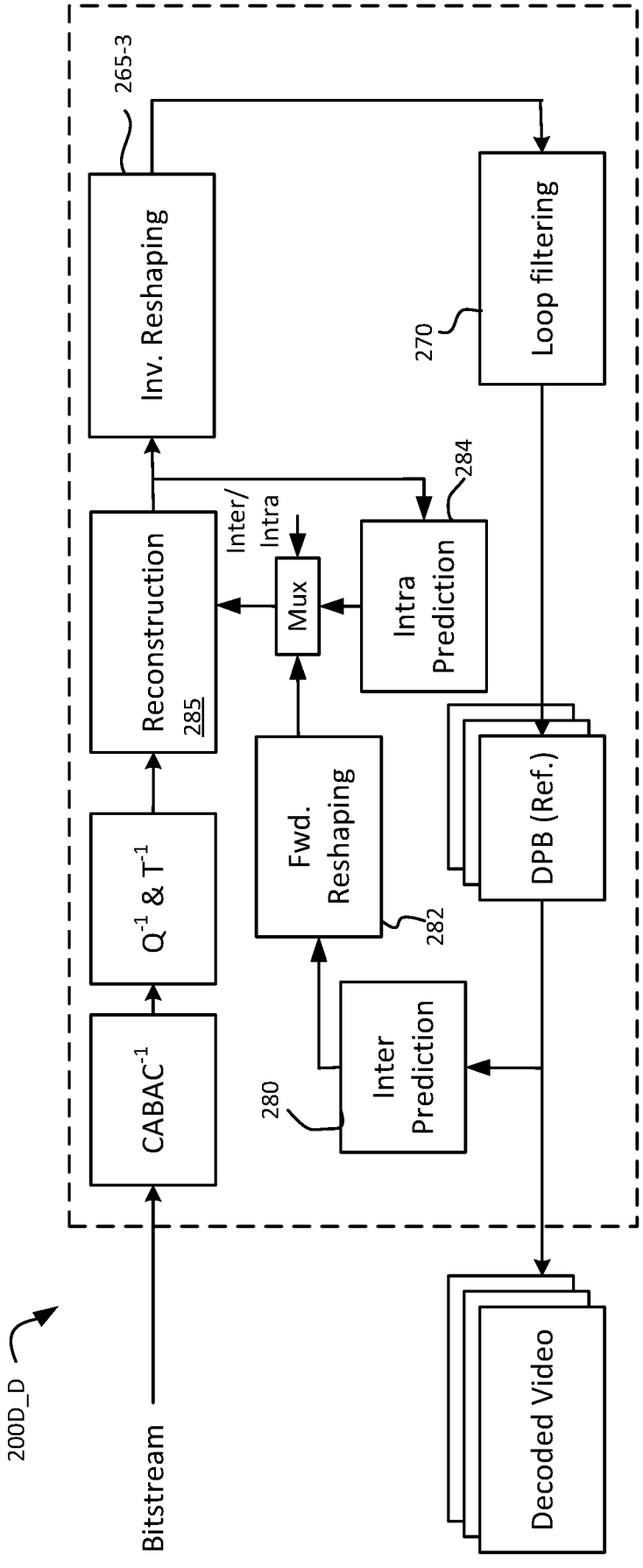
200D_D
Bitstream
CABAC^{-1}
Q^{-1} & T^{-1}
Reconstruction
285
Inv. Reshaping
265-3
Inter/
Intra
Mux
Intra
Prediction
284
Fwd.
Reshaping
282
Inter
Prediction
280
Loop filtering
270
DPB (Ref.)
Decoded Video

FIG. 2E

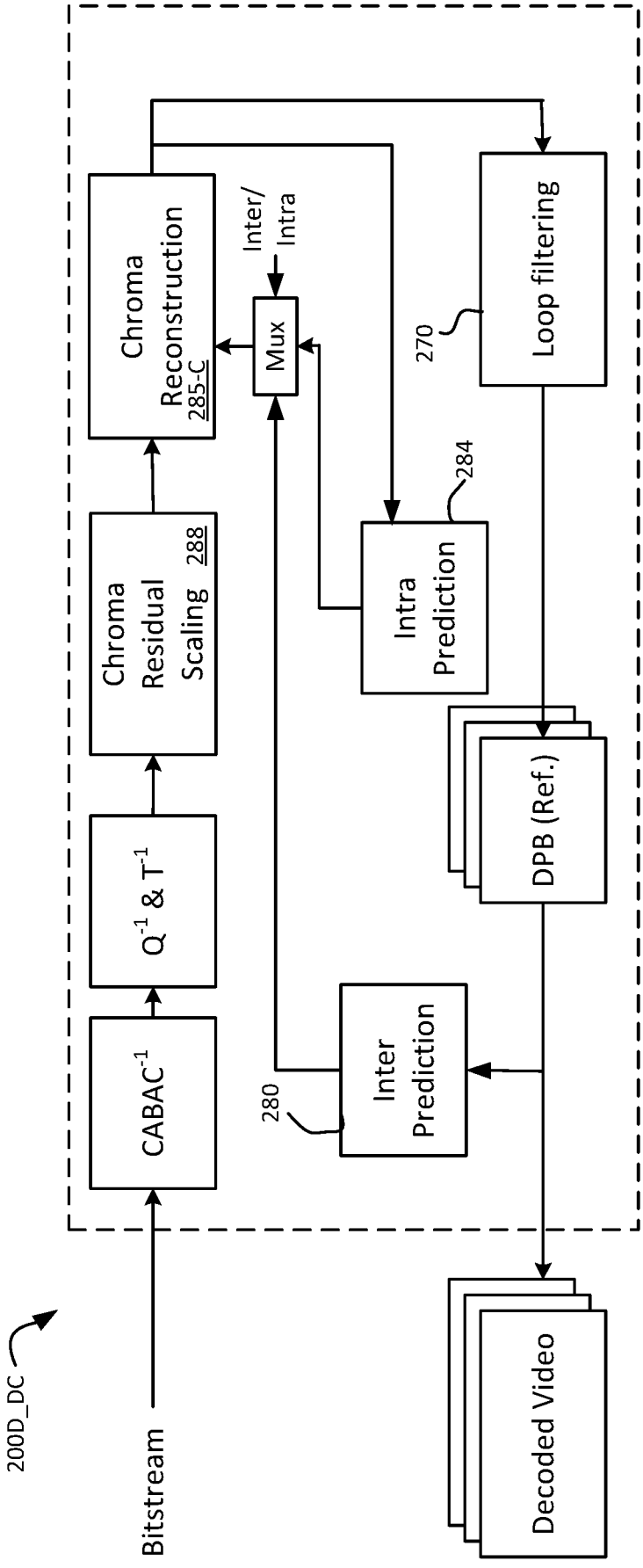
200D_DC
Bitstream
CABAC^{-1}
Q^{-1} & T^{-1}
Chroma Residual Scaling 288
Chroma Reconstruction 285-C
Inter/ Intra
Mux
280
Inter Prediction
Intra Prediction
284
270
Loop filtering
DPB (Ref.)
Decoded Video

FIG. 2F

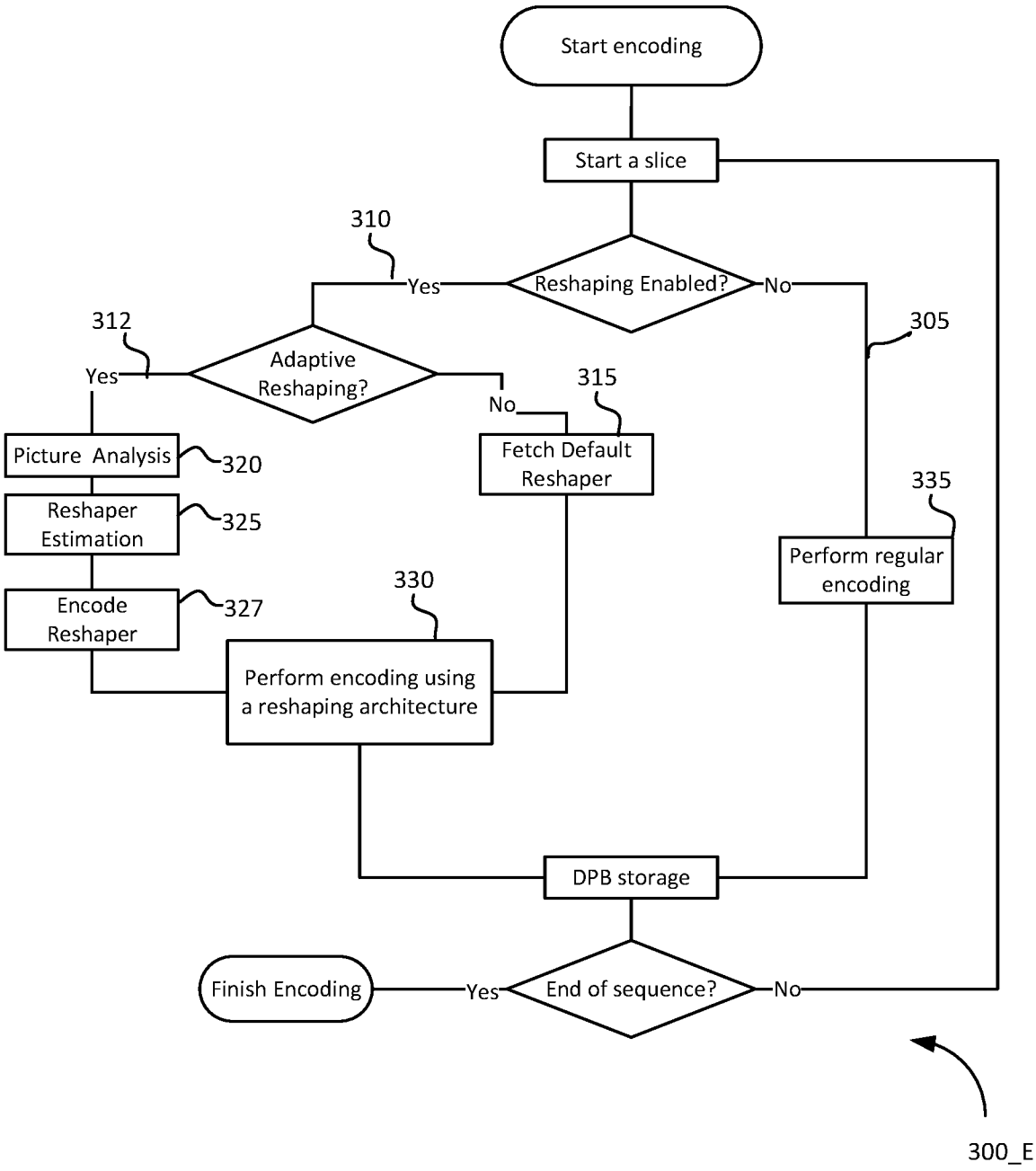
Start encoding
Start a slice
310
Reshaping Enabled?
Yes
No
312
Adaptive Reshaping?
Yes
No
315
305
Picture Analysis
320
Reshaper Estimation
325
Encode Reshaper
327
Fetch Default Reshaper
330
Perform encoding using a reshaping architecture
335
Perform regular encoding
DPB storage
Finish Encoding
End of sequence?
Yes
No
300_E

FIG. 3A

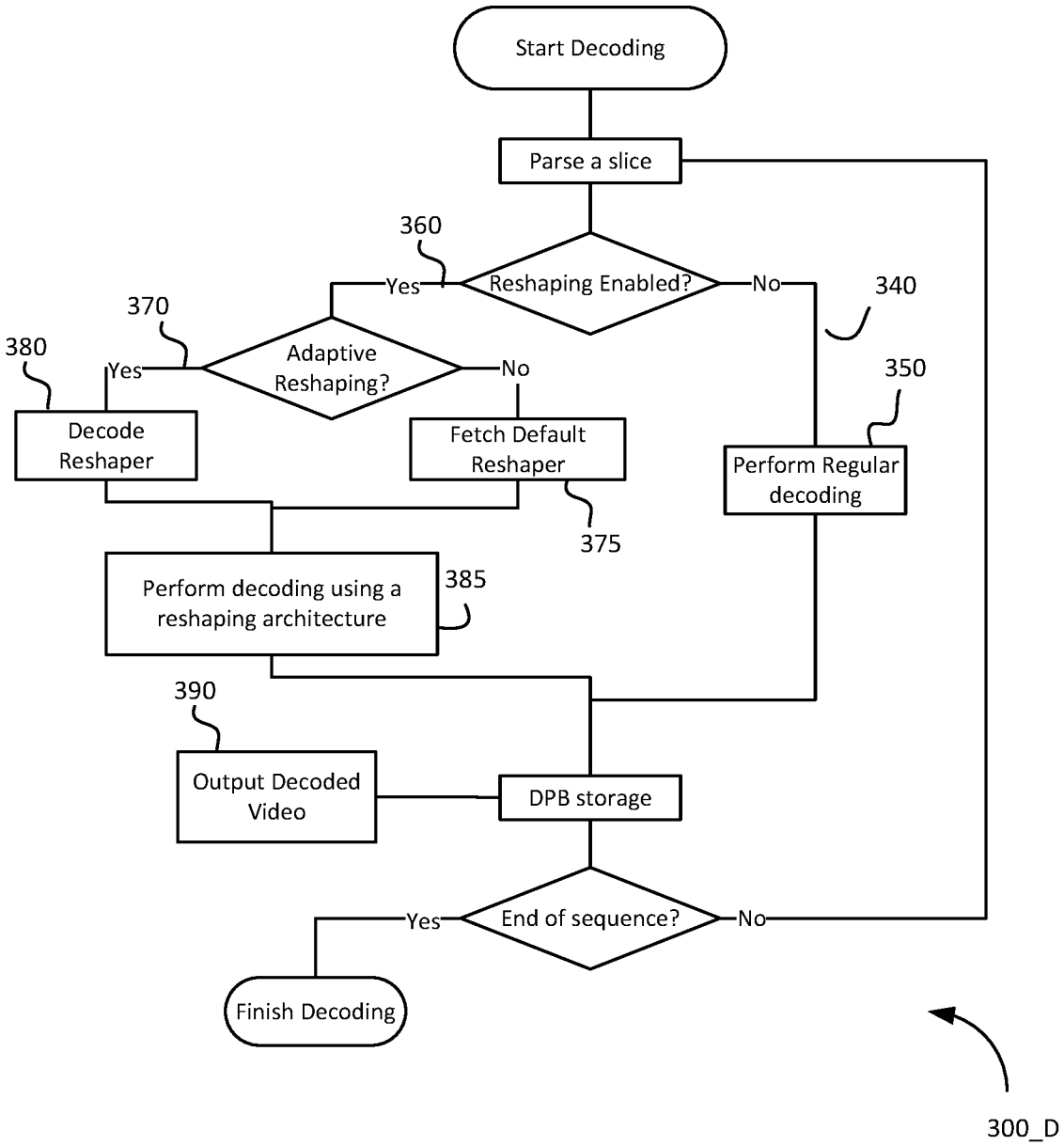
Start Decoding
Parse a slice
360
Reshaping Enabled?
Yes
No
340
370
Adaptive Reshaping?
380
Yes
No
350
Decode Reshaper
Fetch Default Reshaper
Perform Regular decoding
375
Perform decoding using a reshaping architecture
385
390
Output Decoded Video
DPB storage
End of sequence?
Yes
No
Finish Decoding
300_D

FIG. 3B

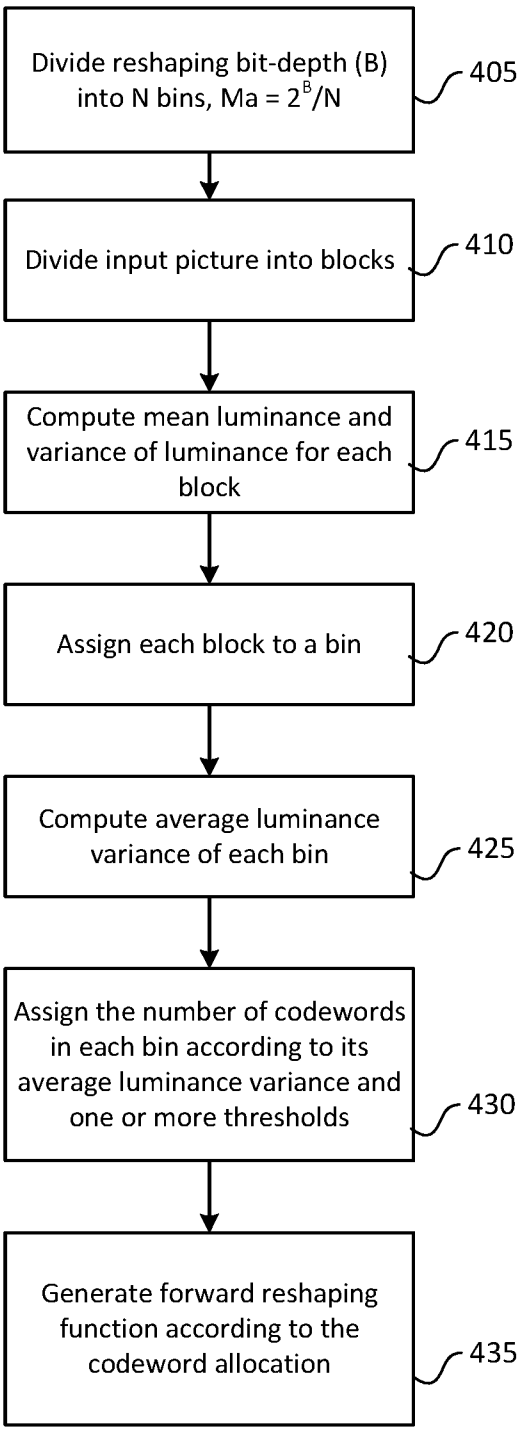
Divide reshaping bit-depth (B) into N bins, Ma = 2^B/N
405
Divide input picture into blocks
410
Compute mean luminance and variance of luminance for each block
415
Assign each block to a bin
420
Compute average luminance variance of each bin
425
Assign the number of codewords in each bin according to its average luminance variance and one or more thresholds
430
Generate forward reshaping function according to the codeword allocation
435

FIG. 4

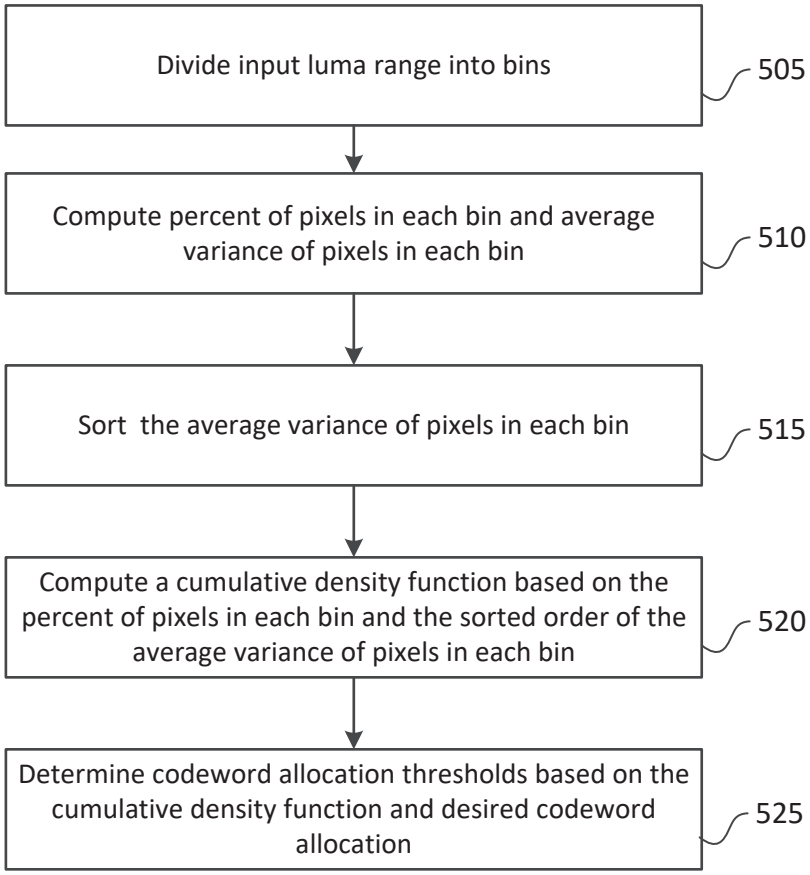
Divide input luma range into bins
505
Compute percent of pixels in each bin and average variance of pixels in each bin
510
Sort the average variance of pixels in each bin
515
Compute a cumulative density function based on the percent of pixels in each bin and the sorted order of the average variance of pixels in each bin
520
Determine codeword allocation thresholds based on the cumulative density function and desired codeword allocation
525

FIG. 5

FIG. 6A

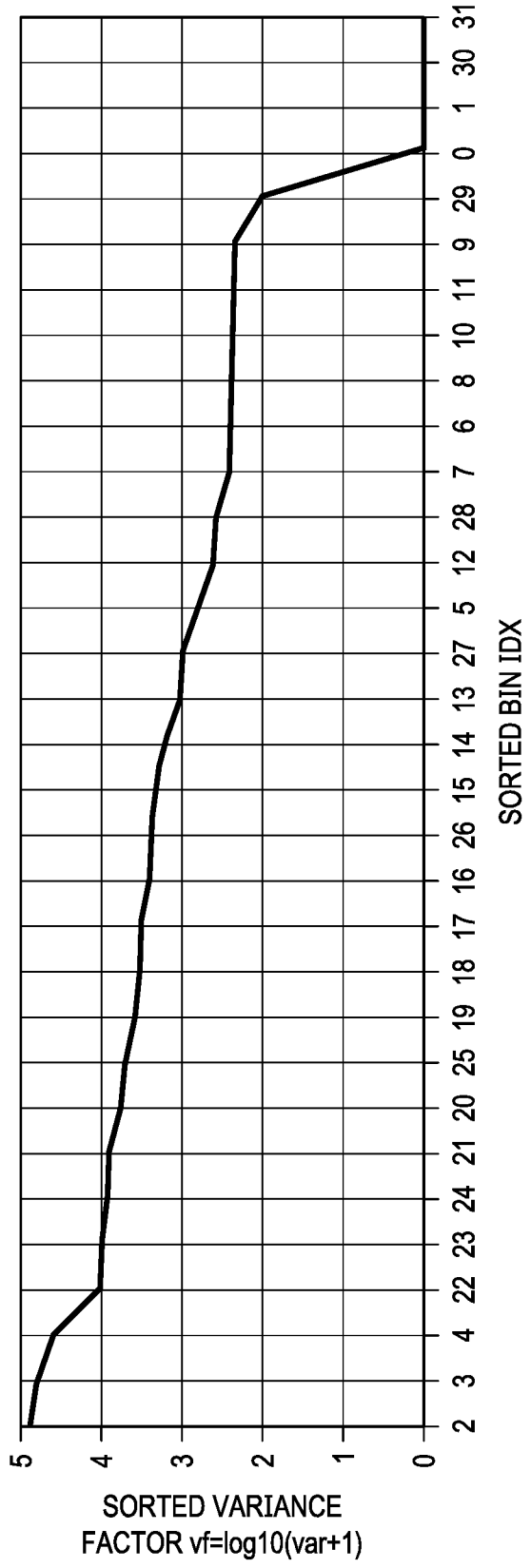
SORTED VARIANCE FACTOR vf=log10(var+1)
5
4
3
2
1
0
SORTED BIN IDX
2 3 4 22 23 24 21 20 25 19 18 17 16 26 15 14 13 27 5 12 28 7 6 8 10 11 9 29 0 1 30 31

FIG. 6B

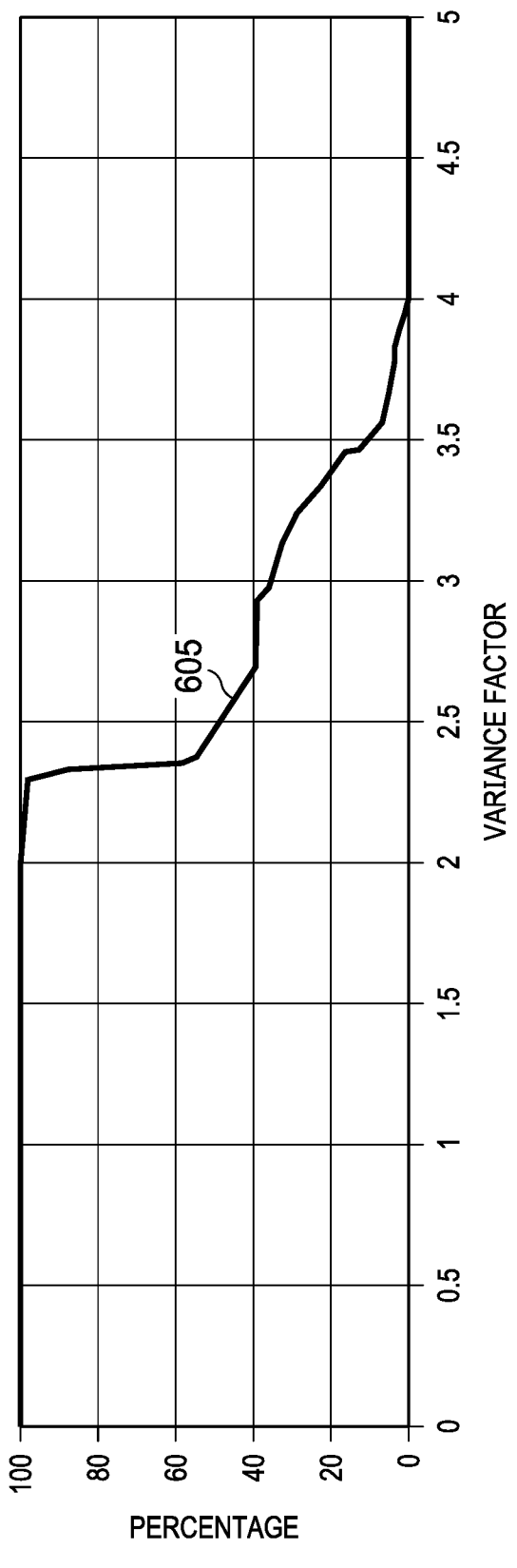
PERCENTAGE
100
80
60
40
20
0
VARIANCE FACTOR
0 0.5 1 1.5 2 2.5 3 3.5 4 4.5 5
605

FIG. 6C

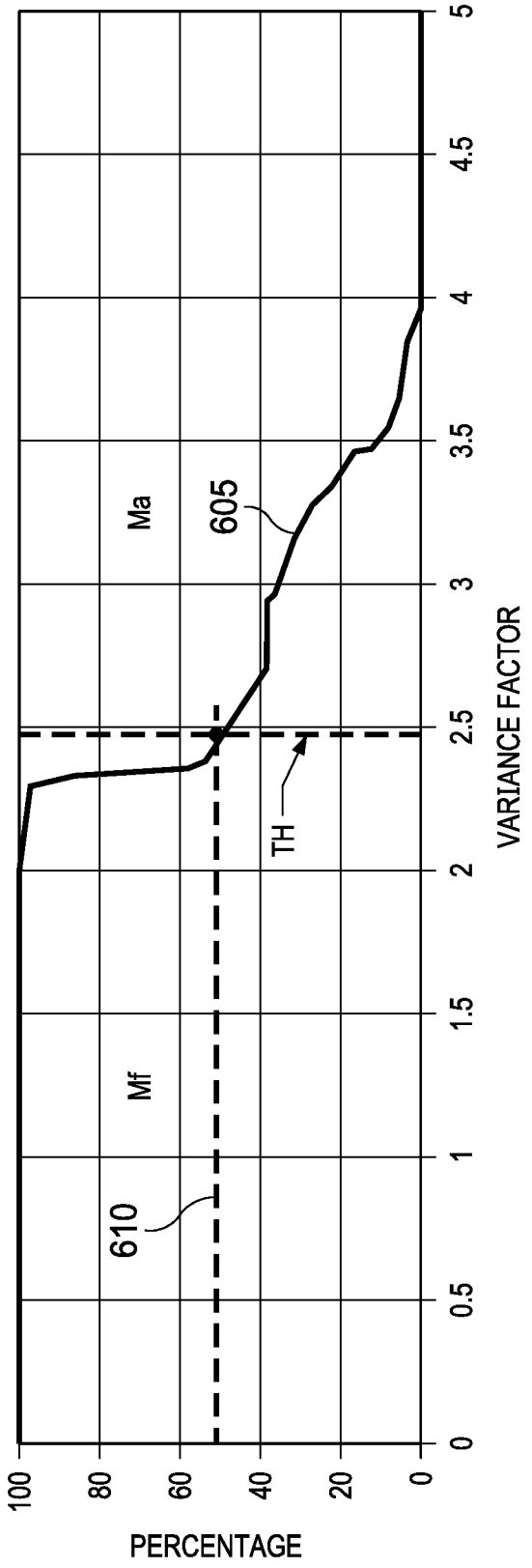
100
80
60
40
20
0
PERCENTAGE
0
0.5
1
1.5
2
2.5
3
3.5
4
4.5
5
VARIANCE FACTOR
Mf
Ma
610
605
TH

FIG. 6D

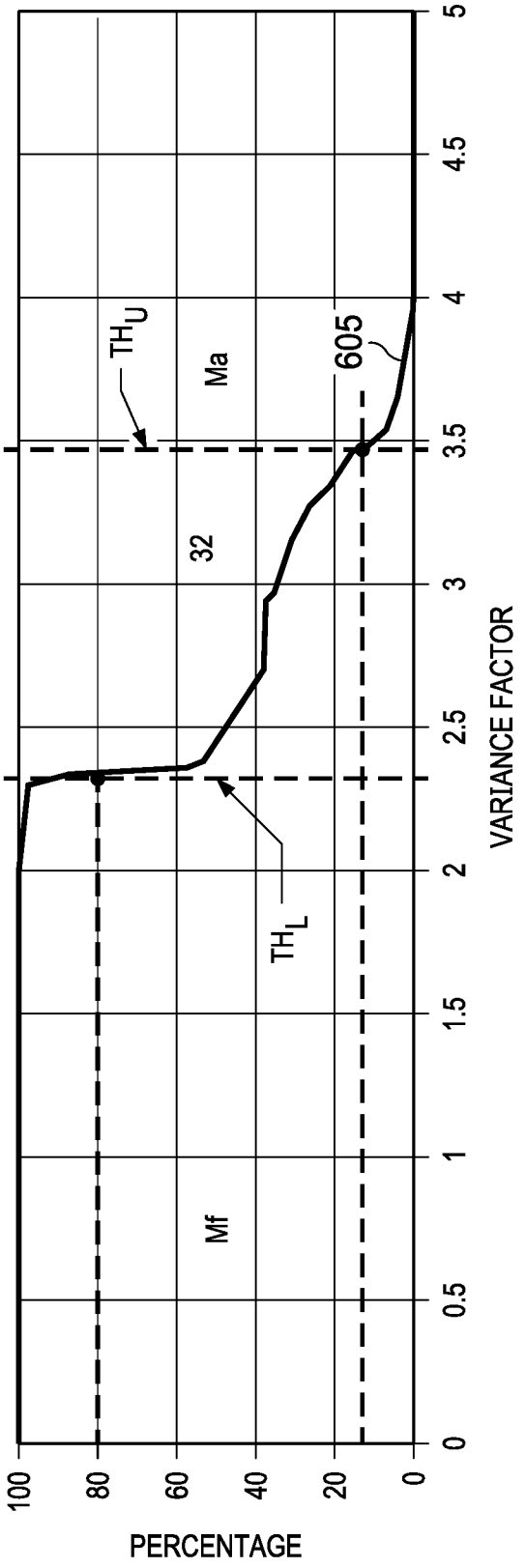
100
80
60
40
20
0
PERCENTAGE
0
0.5
1
1.5
2
2.5
3
3.5
4
4.5
5
VARIANCE FACTOR
Mf
32
Ma
605
TH_U
TH_L

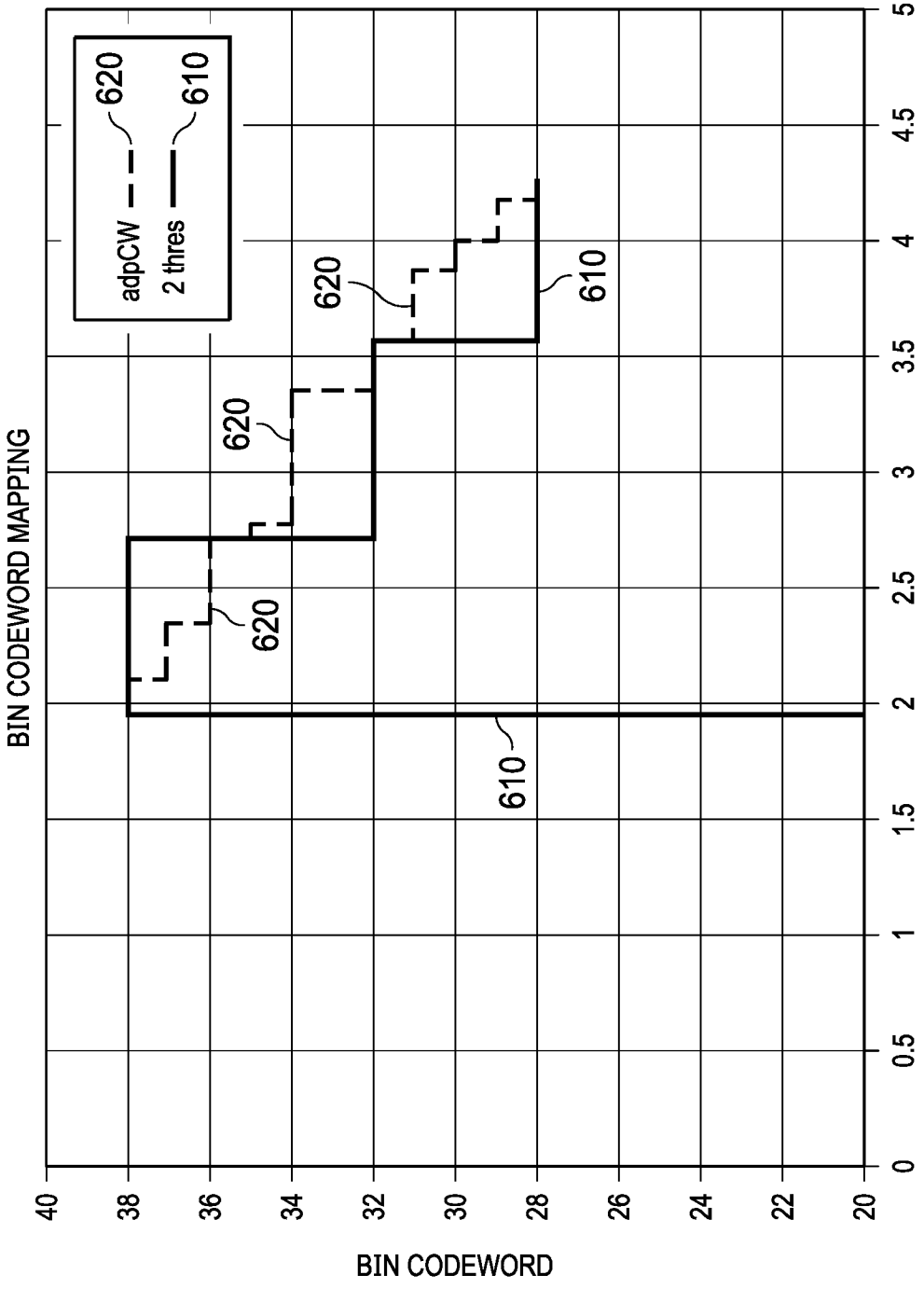
BIN CODEWORD MAPPING
BIN CODEWORD
BIN VARIANCE
adpCW
2 thres
620
610
40
38
36
34
32
30
28
26
24
22
20
0
0.5
1
1.5
2
2.5
3
3.5
4
4.5
5

FIG. 6E