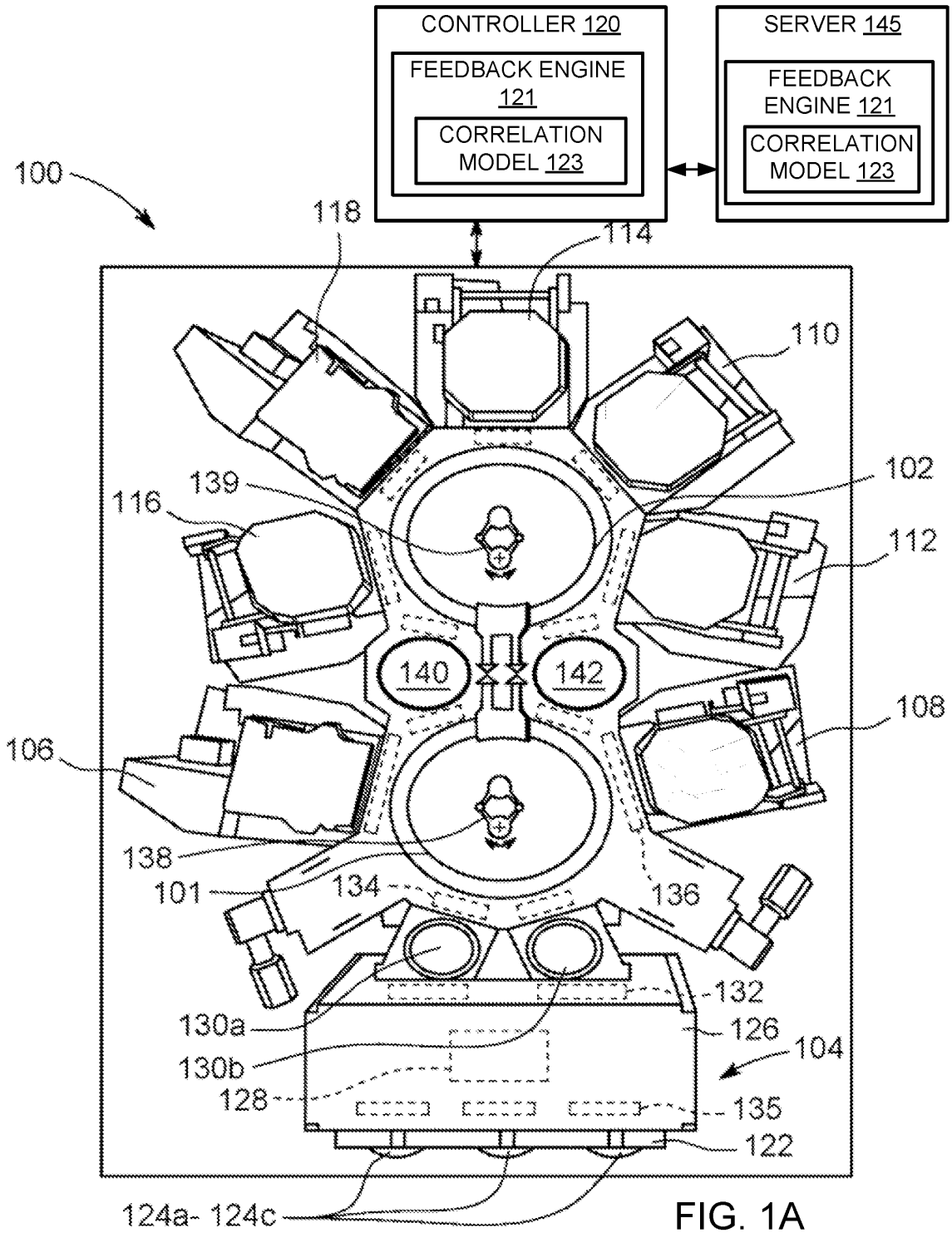
CONTROLLER 120
FEEDBACK ENGINE 121
CORRELATION MODEL 123
SERVER 145
FEEDBACK ENGINE 121
CORRELATION MODEL 123
100
118
114
110
102
139
116
112
140
142
108
106
138
101
134
136
132
130a
126
104
130b
128
135
122
124a- 124c

FIG. 1A

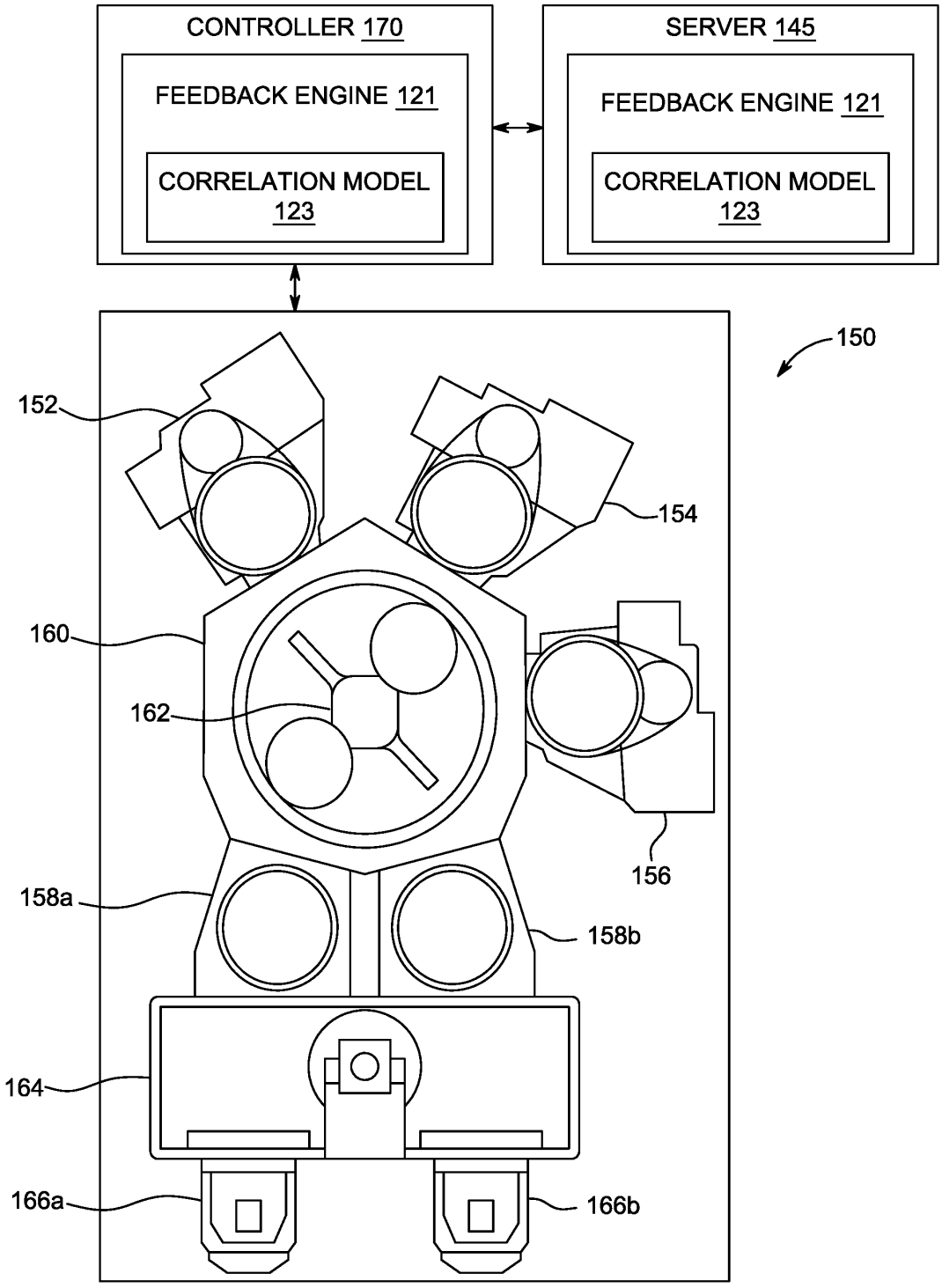
CONTROLLER 170
FEEDBACK ENGINE 121
CORRELATION MODEL 123
SERVER 145
FEEDBACK ENGINE 121
CORRELATION MODEL 123
150
152
154
160
162
156
158a
158b
164
166a
166b

FIG. 1B

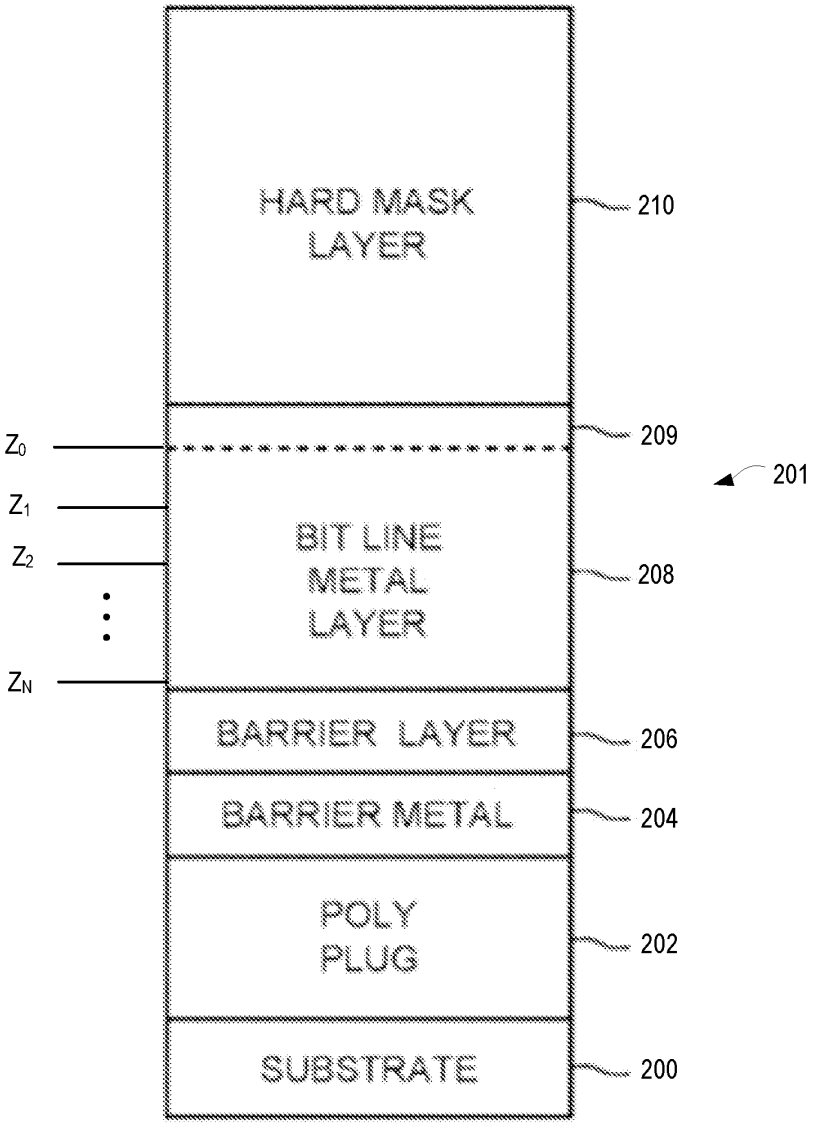
HARD MASK LAYER
210
209
201
Z_0
Z_1
Z_2
Z_N
BIT LINE METAL LAYER
208
BARRIER LAYER
206
BARRIER METAL
204
POLY PLUG
202
SUBSTRATE
200

FIG. 2

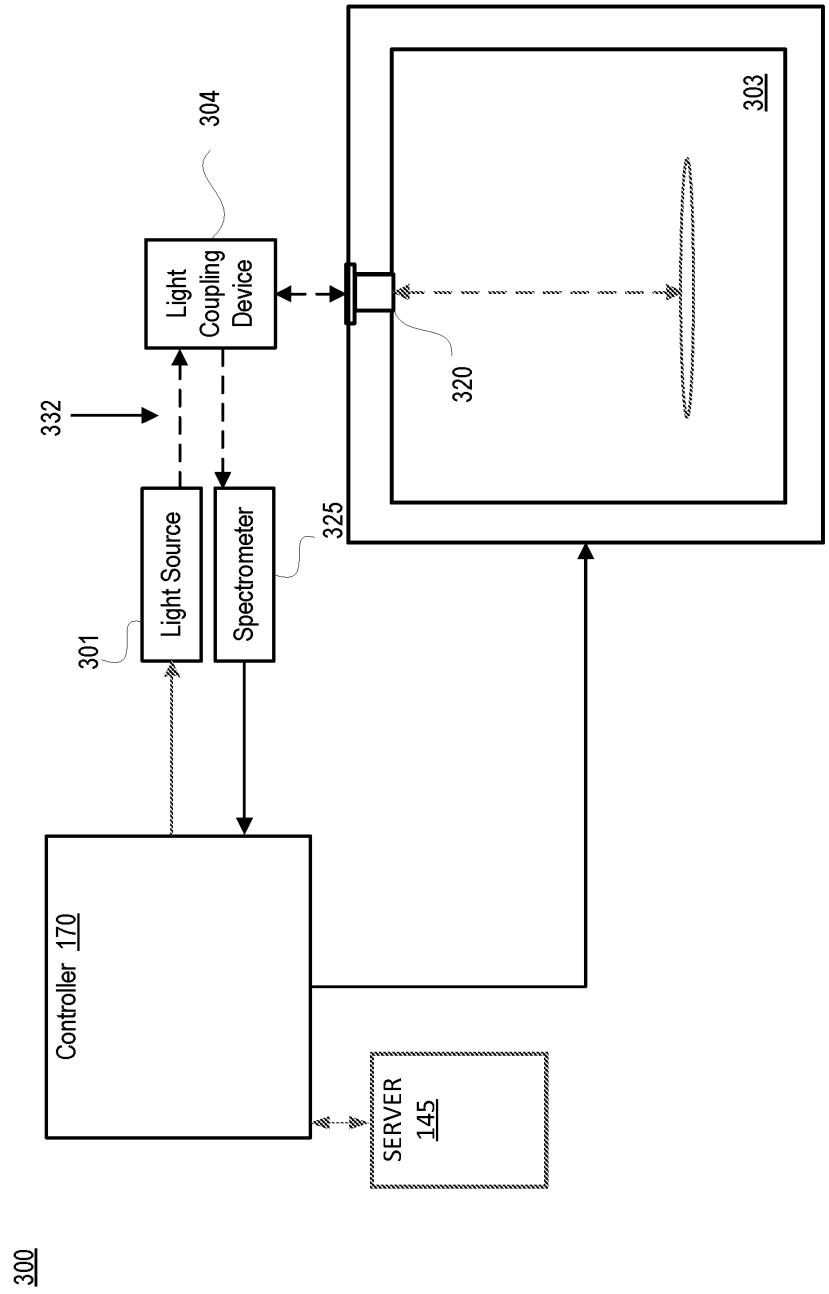
300
Controller 170
SERVER 145
Light Source
Spectrometer
Light Coupling Device
301
325
304
303
320
332

FIG. 3

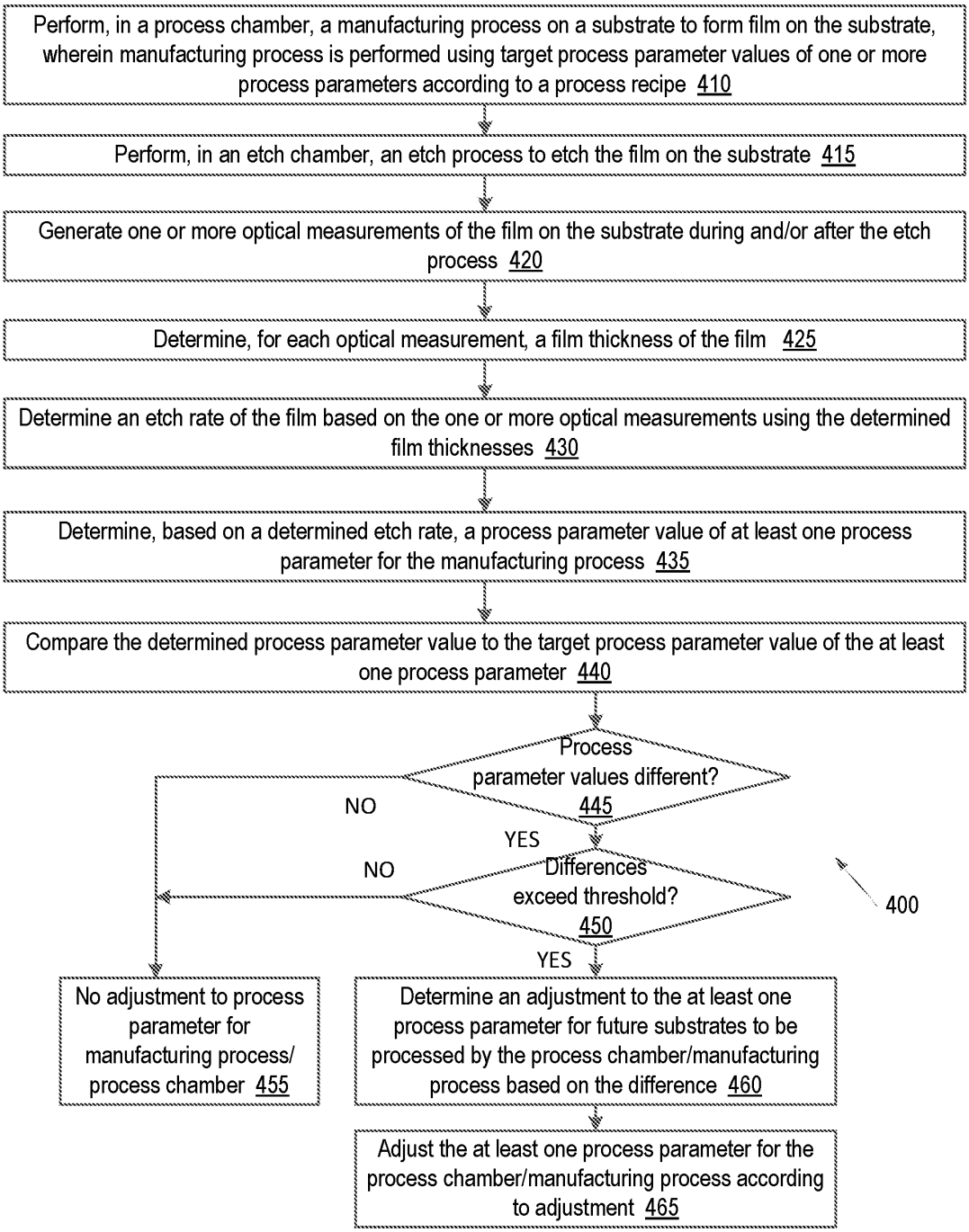
Perform, in a process chamber, a manufacturing process on a substrate to form film on the substrate, wherein manufacturing process is performed using target process parameter values of one or more process parameters according to a process recipe 410
Perform, in an etch chamber, an etch process to etch the film on the substrate 415
Generate one or more optical measurements of the film on the substrate during and/or after the etch process 420
Determine, for each optical measurement, a film thickness of the film 425
Determine an etch rate of the film based on the one or more optical measurements using the determined film thicknesses 430
Determine, based on a determined etch rate, a process parameter value of at least one process parameter for the manufacturing process 435
Compare the determined process parameter value to the target process parameter value of the at least one process parameter 440
Process parameter values different? 445
NO
YES
Differences exceed threshold? 450
NO
YES
400
No adjustment to process parameter for manufacturing process/ process chamber 455
Determine an adjustment to the at least one process parameter for future substrates to be processed by the process chamber/manufacturing process based on the difference 460
Adjust the at least one process parameter for the process chamber/manufacturing process according to adjustment 465

FIG. 4A

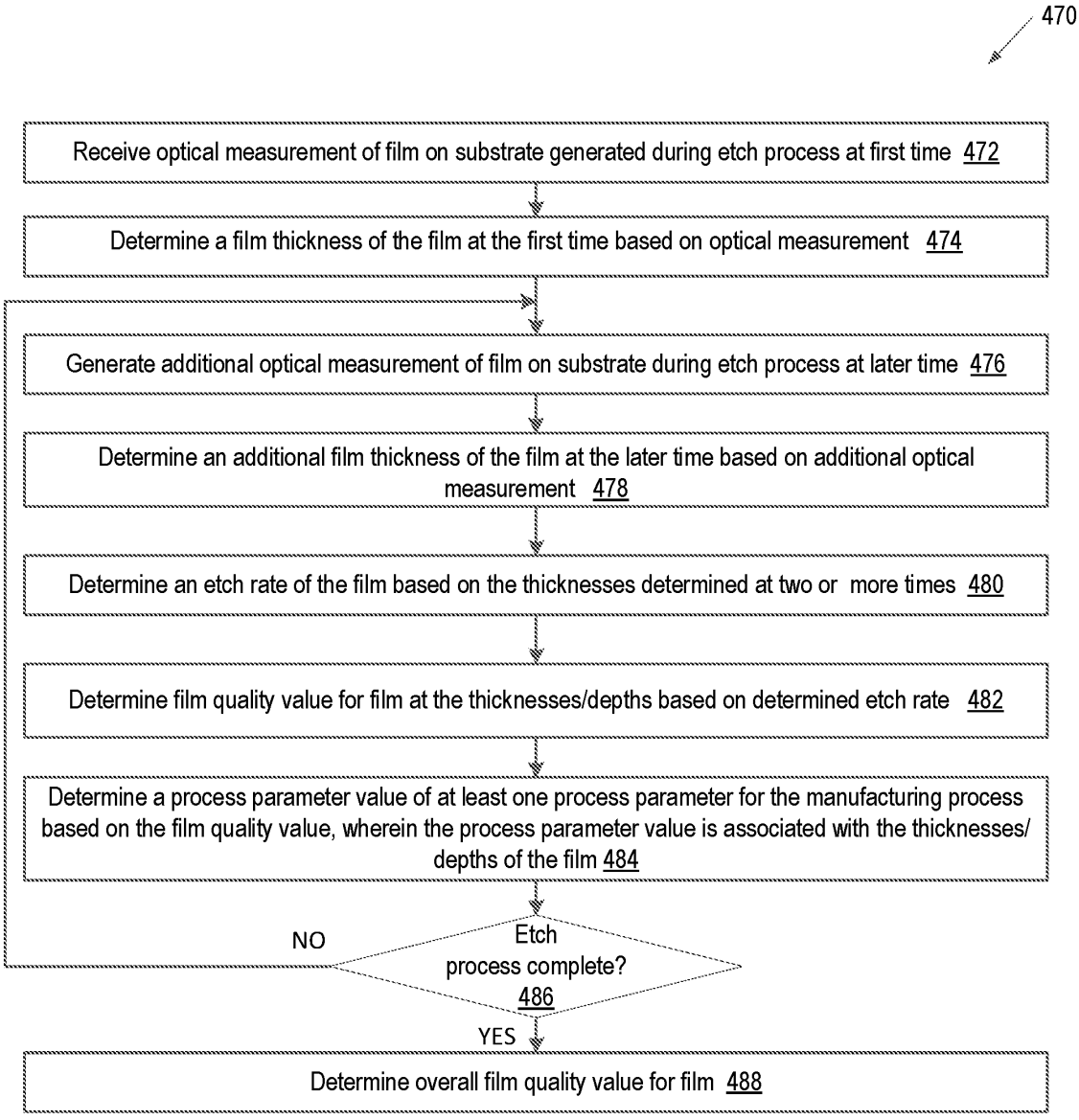
470
Receive optical measurement of film on substrate generated during etch process at first time 472
Determine a film thickness of the film at the first time based on optical measurement 474
Generate additional optical measurement of film on substrate during etch process at later time 476
Determine an additional film thickness of the film at the later time based on additional optical measurement 478
Determine an etch rate of the film based on the thicknesses determined at two or more times 480
Determine film quality value for film at the thicknesses/depths based on determined etch rate 482
Determine a process parameter value of at least one process parameter for the manufacturing process based on the film quality value, wherein the process parameter value is associated with the thicknesses/depths of the film 484
Etch process complete? 486
NO
YES
Determine overall film quality value for film 488

FIG. 4B

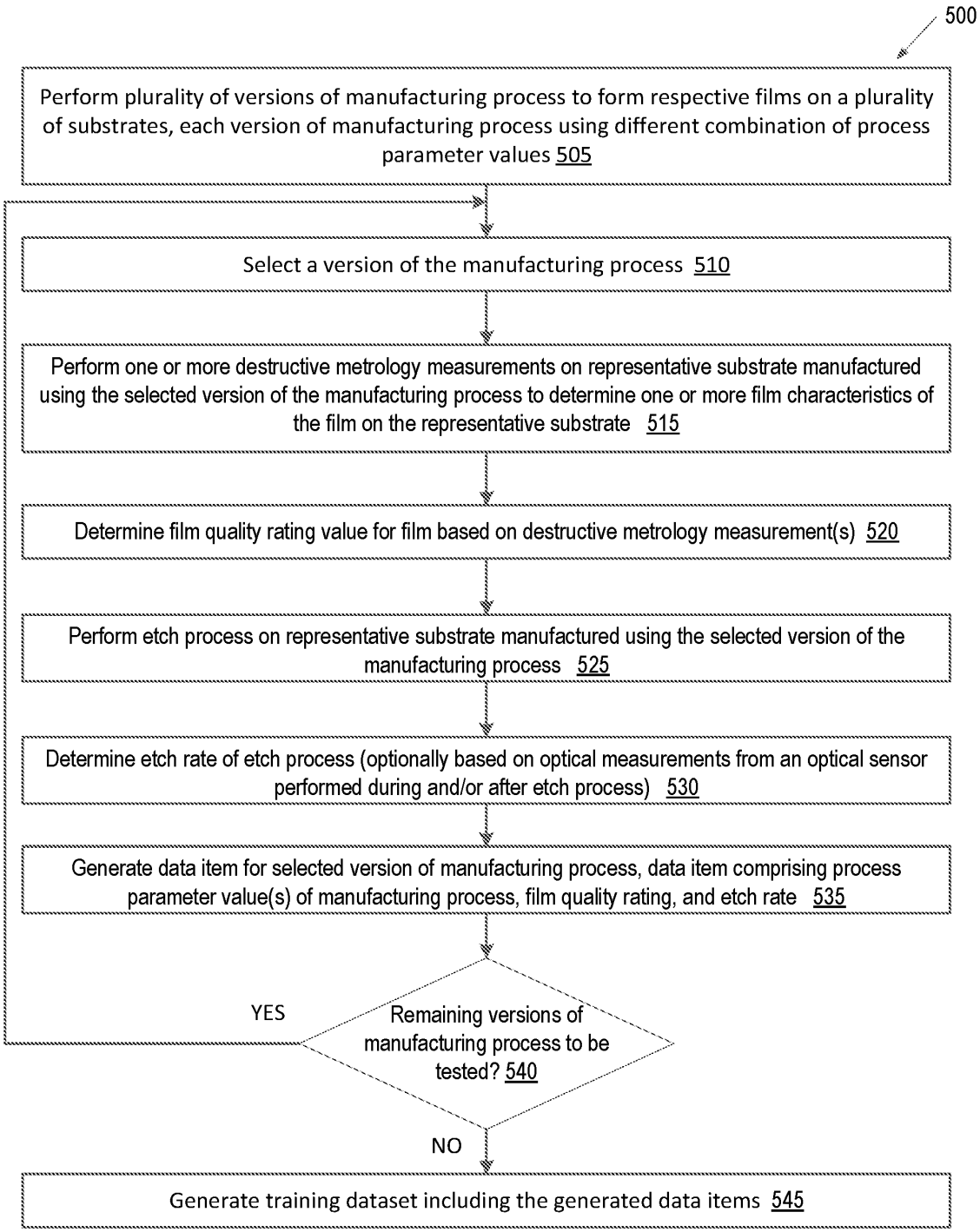
500
Perform plurality of versions of manufacturing process to form respective films on a plurality of substrates, each version of manufacturing process using different combination of process parameter values 505
Select a version of the manufacturing process 510
Perform one or more destructive metrology measurements on representative substrate manufactured using the selected version of the manufacturing process to determine one or more film characteristics of the film on the representative substrate 515
Determine film quality rating value for film based on destructive metrology measurement(s) 520
Perform etch process on representative substrate manufactured using the selected version of the manufacturing process 525
Determine etch rate of etch process (optionally based on optical measurements from an optical sensor performed during and/or after etch process) 530
Generate data item for selected version of manufacturing process, data item comprising process parameter value(s) of manufacturing process, film quality rating, and etch rate 535
Remaining versions of manufacturing process to be tested? 540
YES
NO
Generate training dataset including the generated data items 545

FIG. 5

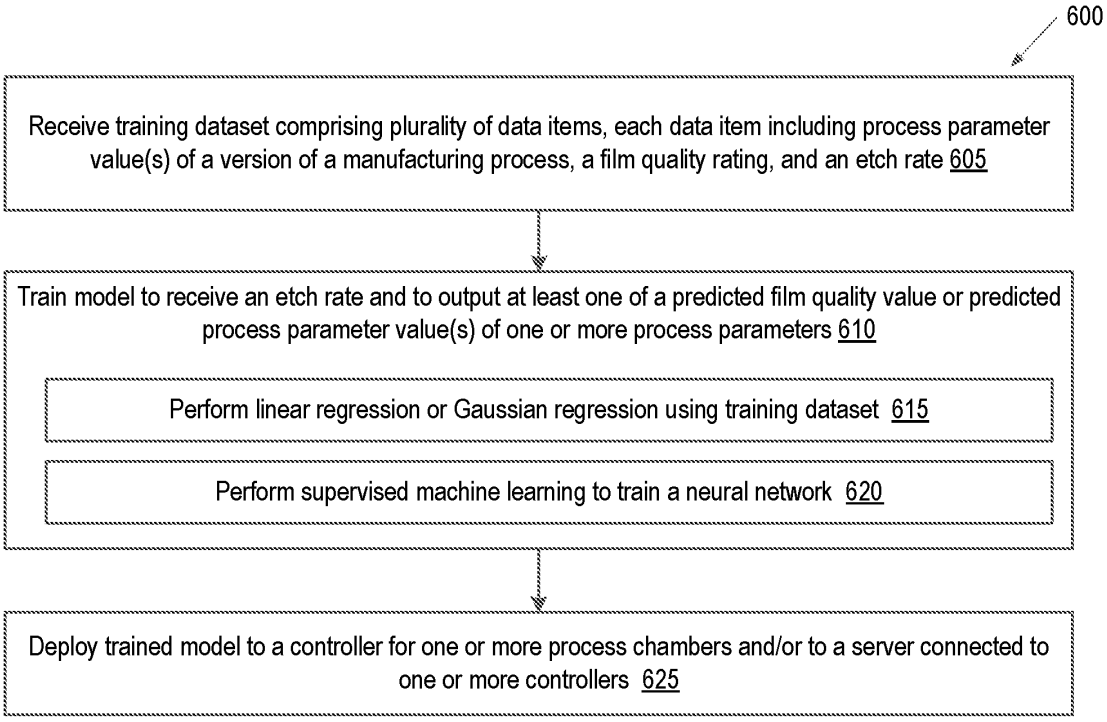
600
Receive training dataset comprising plurality of data items, each data item including process parameter value(s) of a version of a manufacturing process, a film quality rating, and an etch rate 605
Train model to receive an etch rate and to output at least one of a predicted film quality value or predicted process parameter value(s) of one or more process parameters 610
Perform linear regression or Gaussian regression using training dataset 615
Perform supervised machine learning to train a neural network 620
Deploy trained model to a controller for one or more process chambers and/or to a server connected to one or more controllers 625

FIG. 6

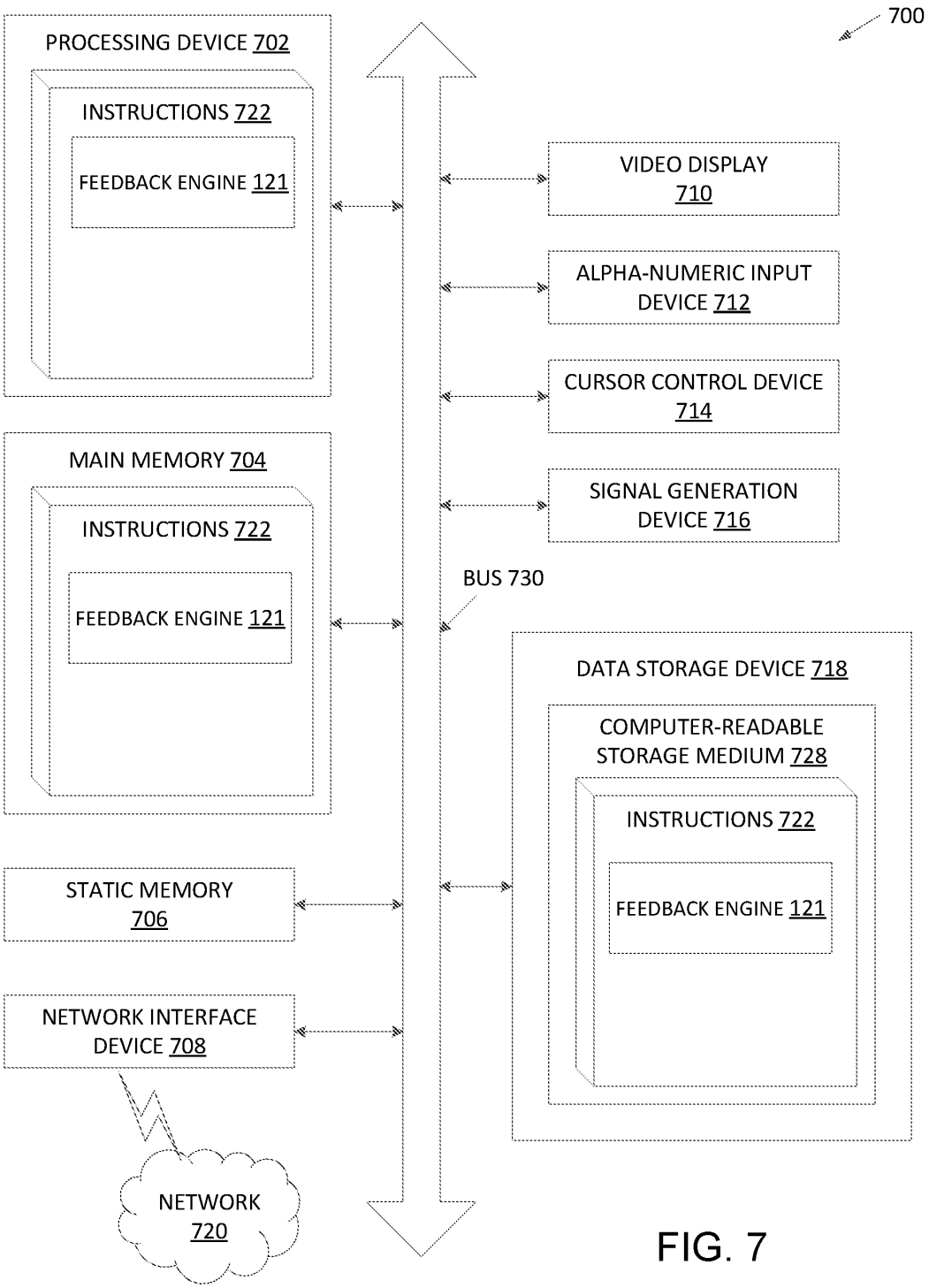
700
PROCESSING DEVICE 702
INSTRUCTIONS 722
FEEDBACK ENGINE 121
MAIN MEMORY 704
INSTRUCTIONS 722
FEEDBACK ENGINE 121
STATIC MEMORY 706
NETWORK INTERFACE DEVICE 708
NETWORK 720
BUS 730
VIDEO DISPLAY 710
ALPHA-NUMERIC INPUT DEVICE 712
CURSOR CONTROL DEVICE 714
SIGNAL GENERATION DEVICE 716
DATA STORAGE DEVICE 718
COMPUTER-READABLE STORAGE MEDIUM 728
INSTRUCTIONS 722
FEEDBACK ENGINE 121

FIG. 7