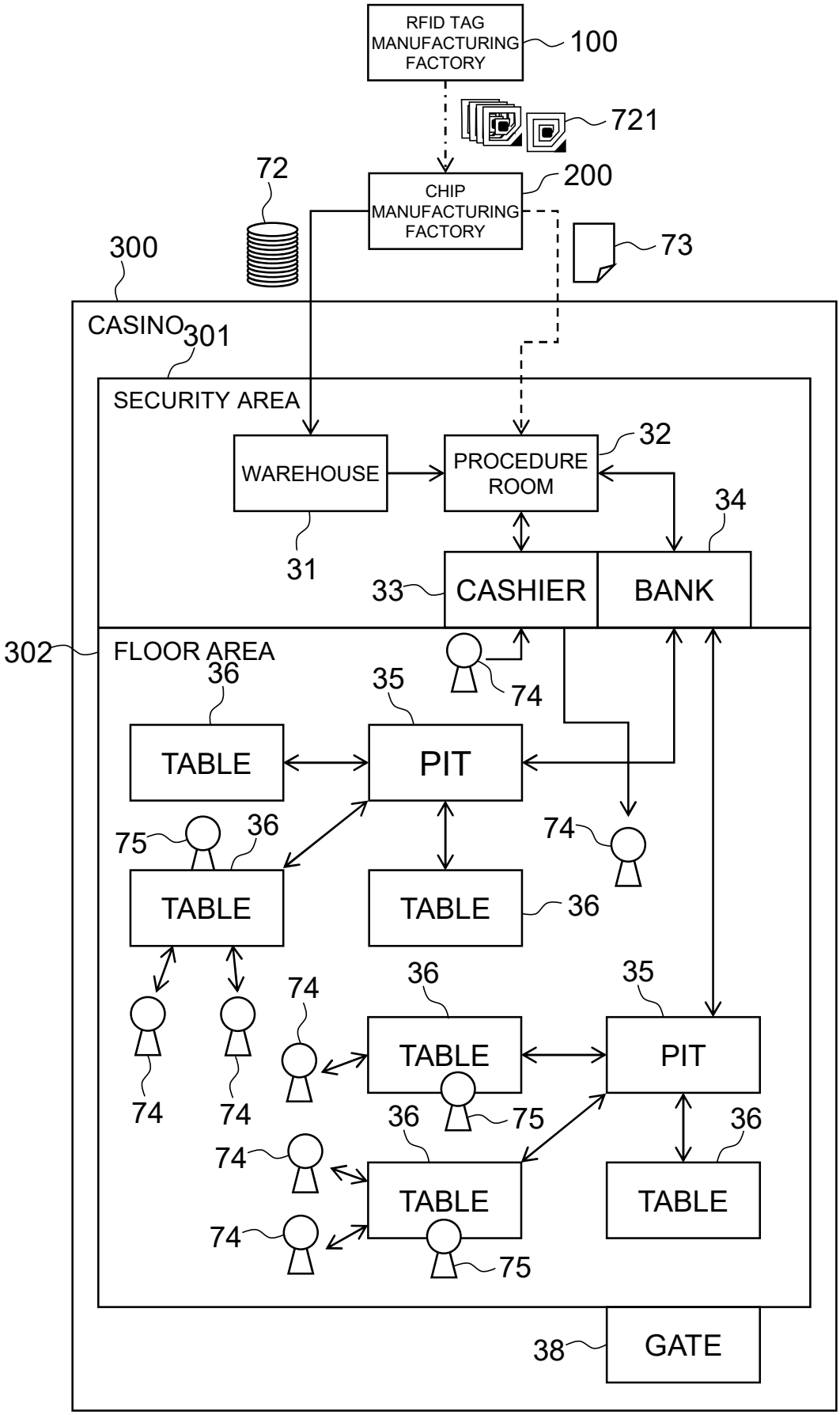
RFID TAG MANUFACTURING FACTORY
100
721
72
CHIP MANUFACTURING FACTORY
200
73
300
CASINO
301
SECURITY AREA
WAREHOUSE
PROCEDURE ROOM
32
34
31
33
CASHIER
BANK
302
FLOOR AREA
36
35
74
TABLE
PIT
75
36
74
TABLE
TABLE
36
74
36
35
74
74
TABLE
PIT
36
75
36
74
TABLE
TABLE
74
75
38
GATE

FIG.1

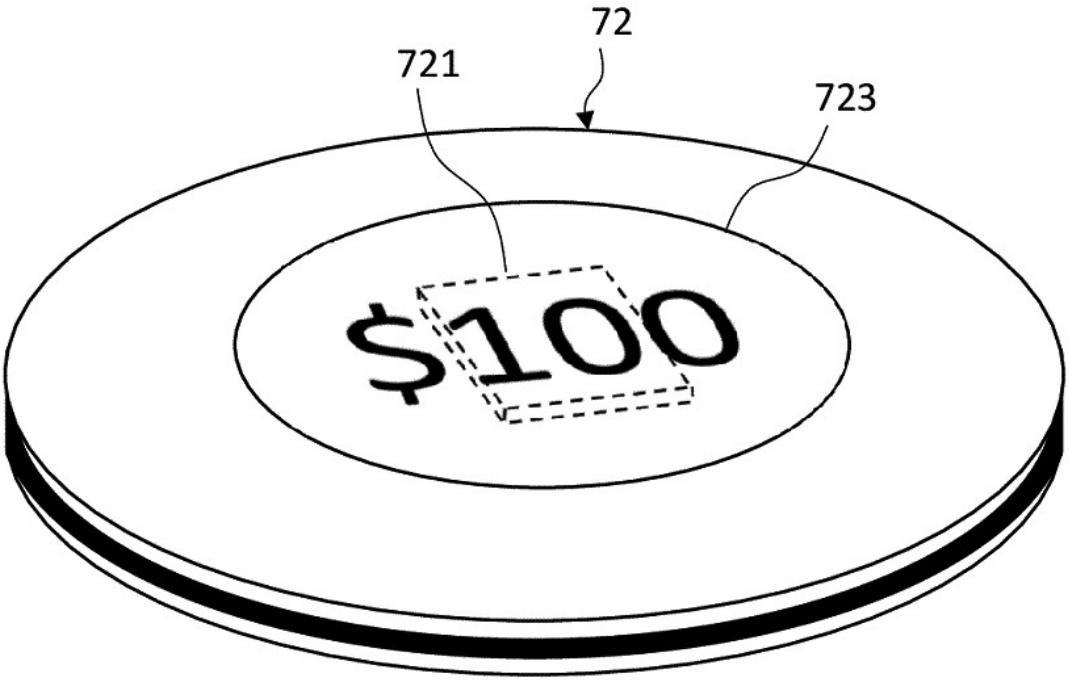

FIG.2

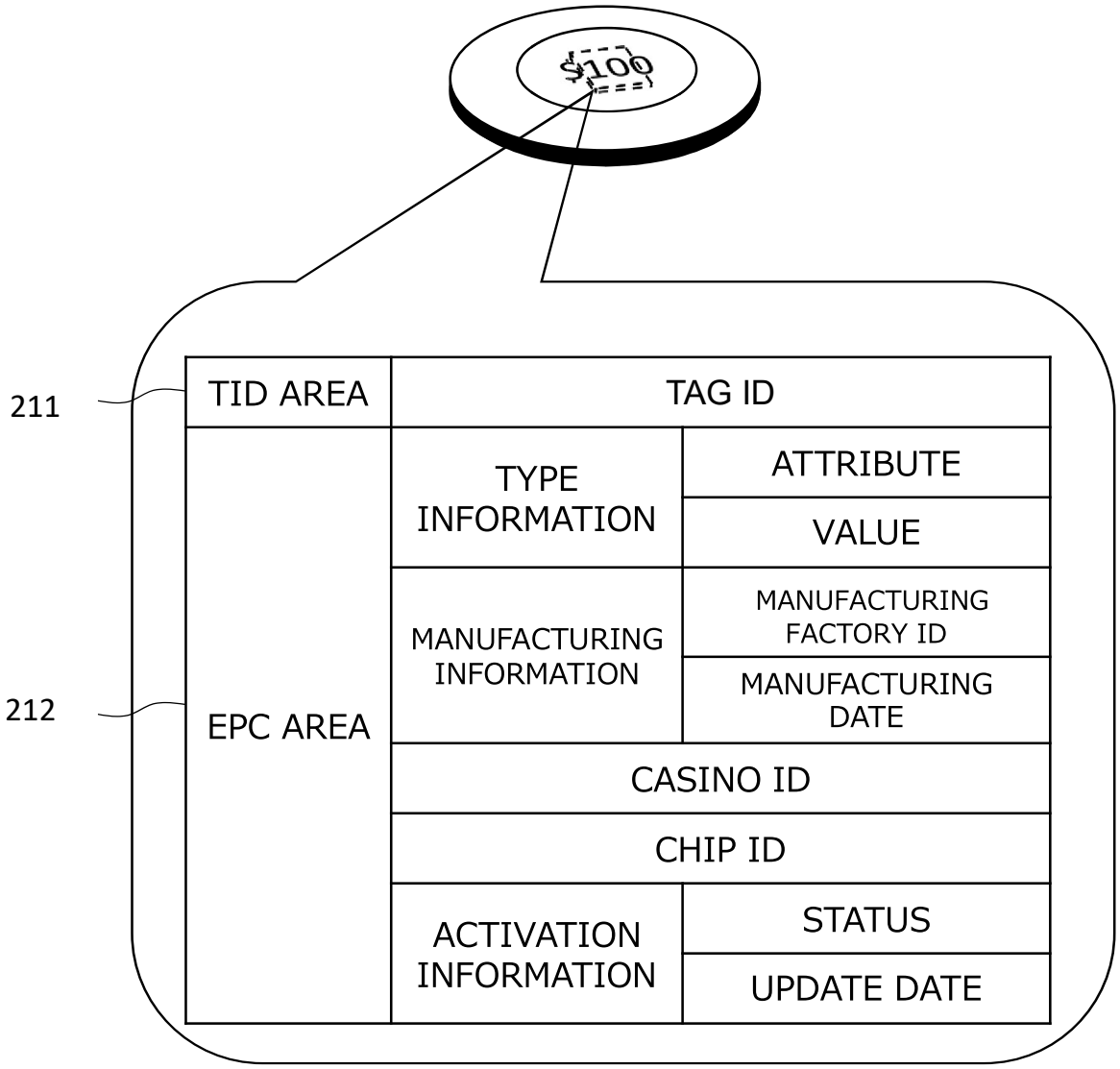
$100
211
212
TID AREA
TAG ID
EPC AREA
TYPE INFORMATION
ATTRIBUTE
VALUE
MANUFACTURING INFORMATION
MANUFACTURING FACTORY ID
MANUFACTURING DATE
CASINO ID
CHIP ID
ACTIVATION INFORMATION
STATUS
UPDATE DATE

FIG.3

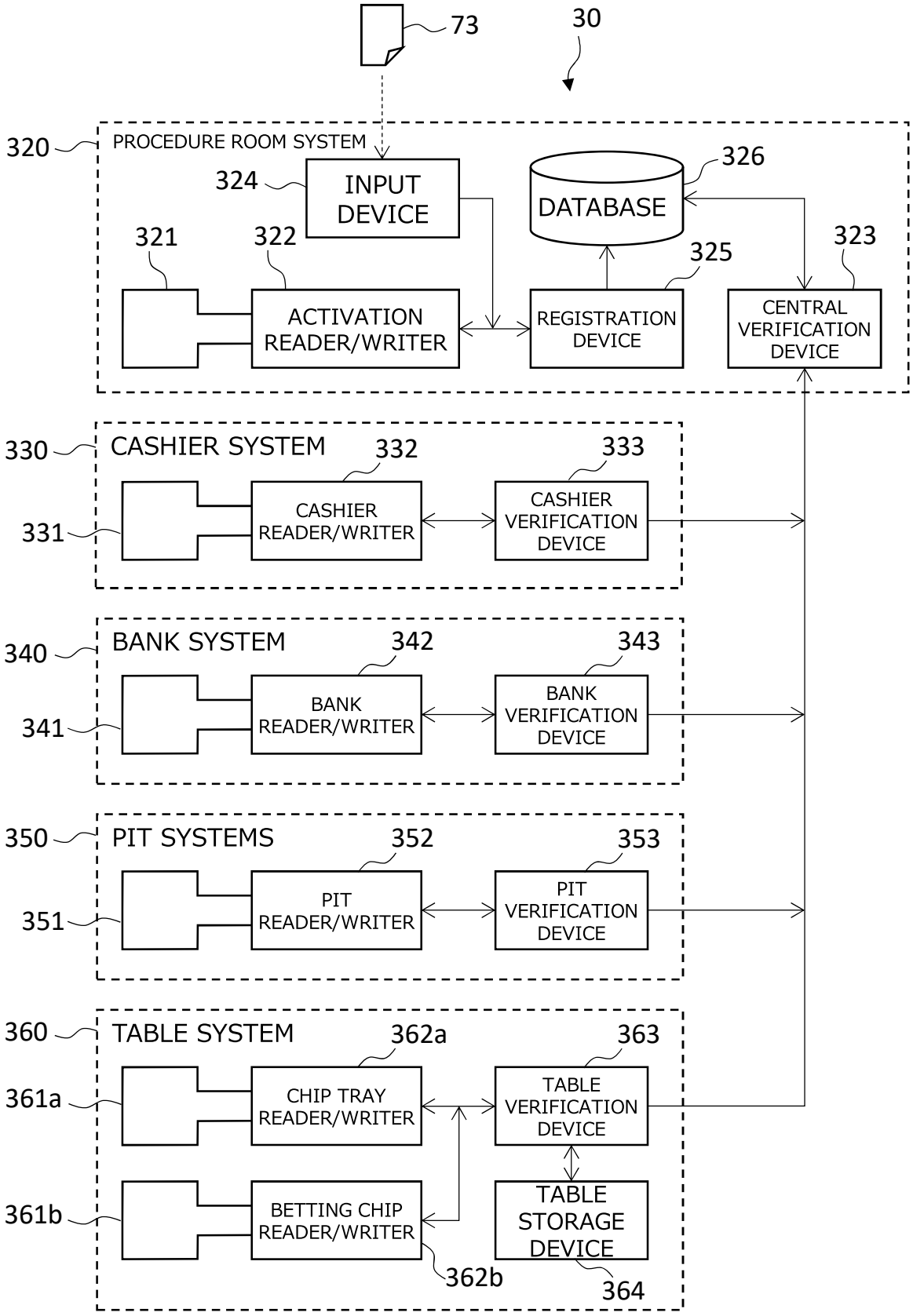
73
30
320
PROCEDURE ROOM SYSTEM
324
INPUT DEVICE
326
DATABASE
321
322
325
323
ACTIVATION READER/WRITER
REGISTRATION DEVICE
CENTRAL VERIFICATION DEVICE
330
CASHIER SYSTEM
332
333
331
CASHIER READER/WRITER
CASHIER VERIFICATION DEVICE
340
BANK SYSTEM
342
343
341
BANK READER/WRITER
BANK VERIFICATION DEVICE
350
PIT SYSTEMS
352
353
351
PIT READER/WRITER
PIT VERIFICATION DEVICE
360
TABLE SYSTEM
362a
363
361a
CHIP TRAY READER/WRITER
TABLE VERIFICATION DEVICE
361b
BETTING CHIP READER/WRITER
TABLE STORAGE DEVICE
362b
364

FIG.4

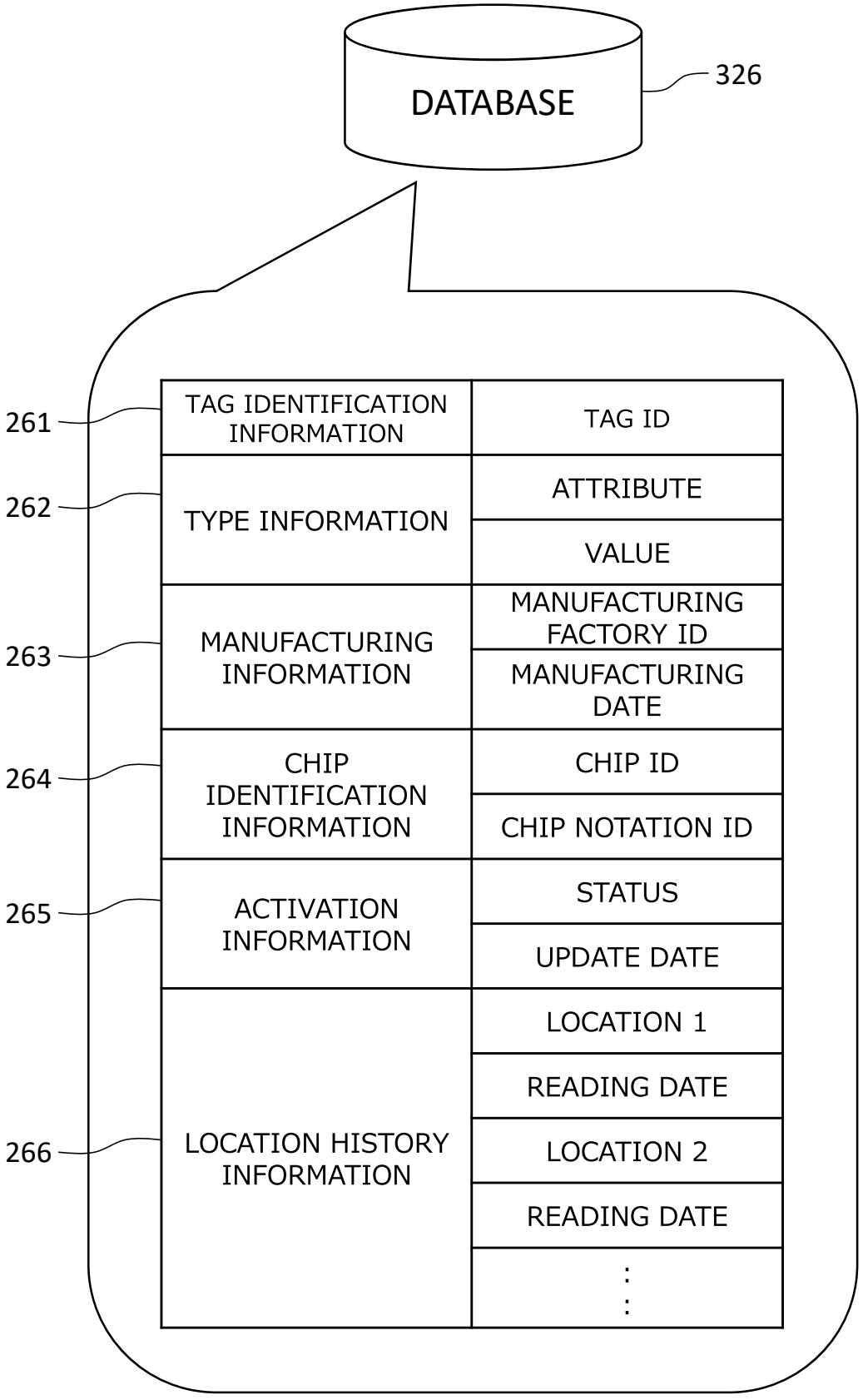
DATABASE
326
261
TAG IDENTIFICATION INFORMATION
TAG ID
262
TYPE INFORMATION
ATTRIBUTE
VALUE
263
MANUFACTURING INFORMATION
MANUFACTURING FACTORY ID
MANUFACTURING DATE
264
CHIP IDENTIFICATION INFORMATION
CHIP ID
CHIP NOTATION ID
265
ACTIVATION INFORMATION
STATUS
UPDATE DATE
266
LOCATION HISTORY INFORMATION
LOCATION 1
READING DATE
LOCATION 2
READING DATE
:
:

FIG.5

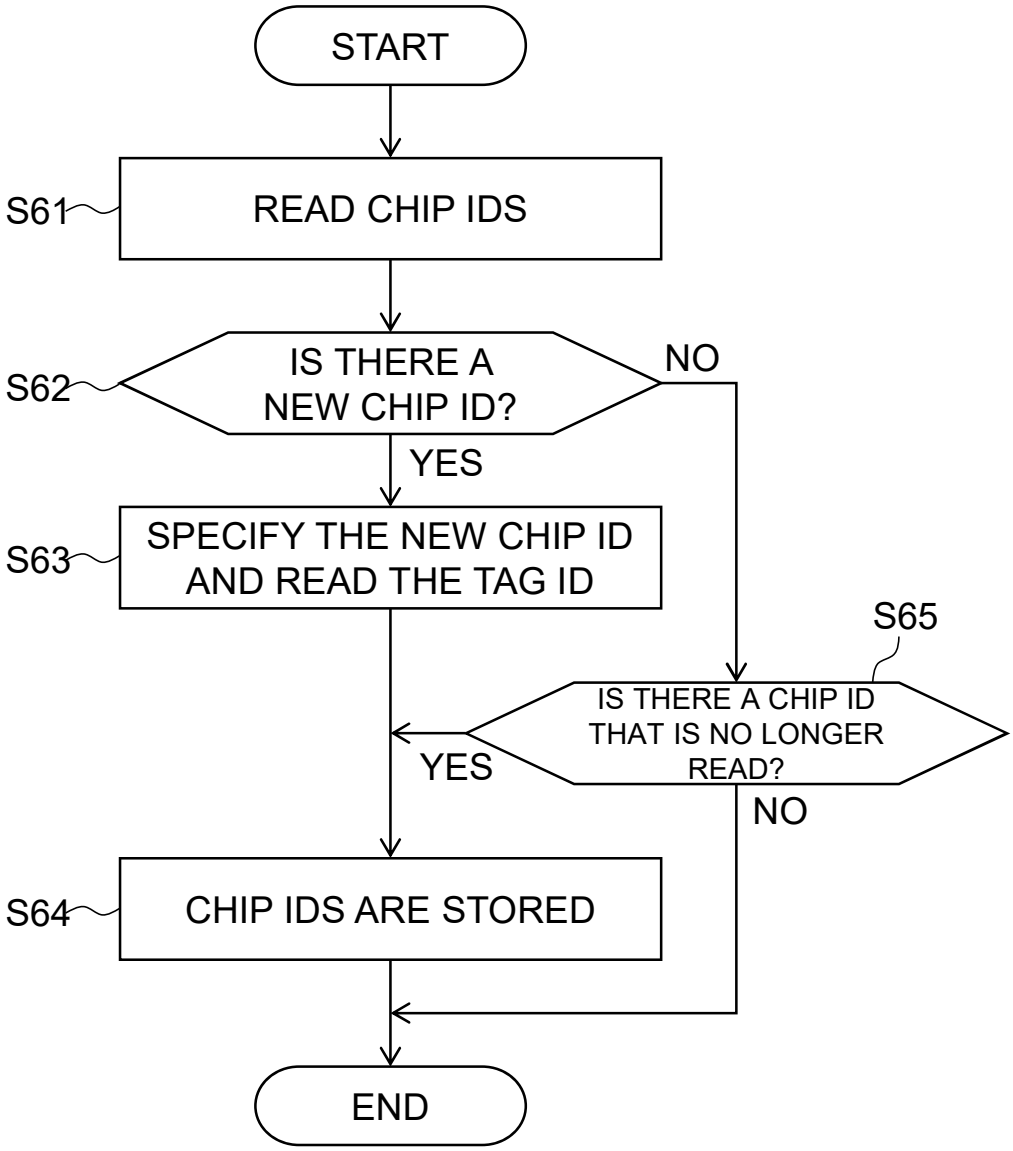
START
S61
READ CHIP IDS
S62
IS THERE A NEW CHIP ID?
NO
YES
S63
SPECIFY THE NEW CHIP ID AND READ THE TAG ID
S65
IS THERE A CHIP ID THAT IS NO LONGER READ?
YES
NO
S64
CHIP IDS ARE STORED
END

FIG.6

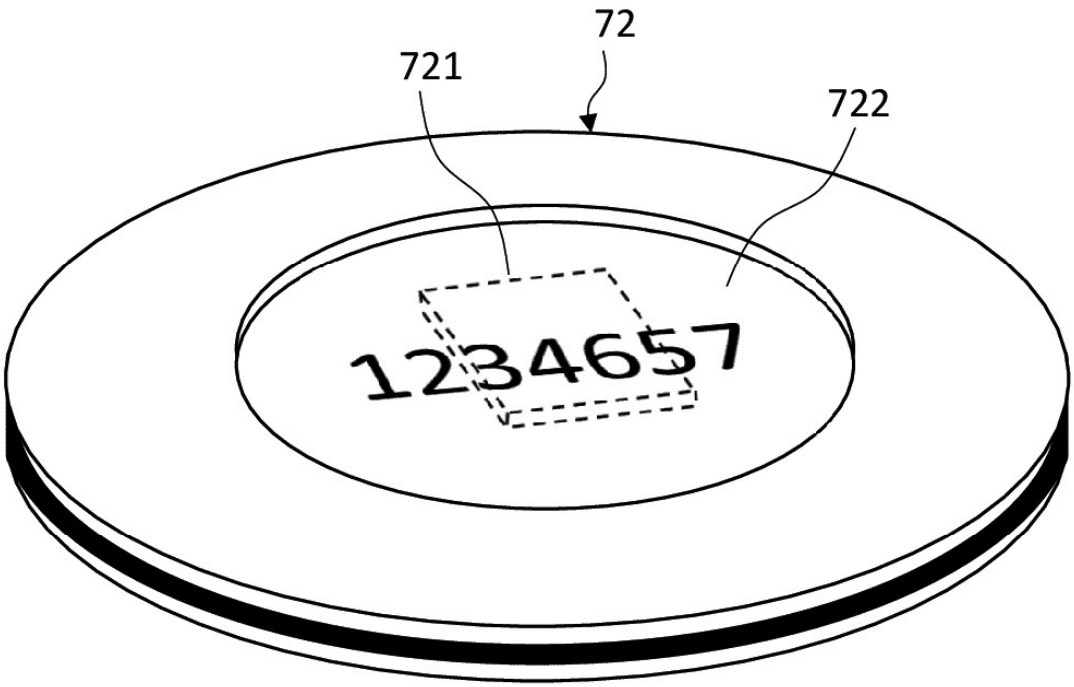

FIG.7

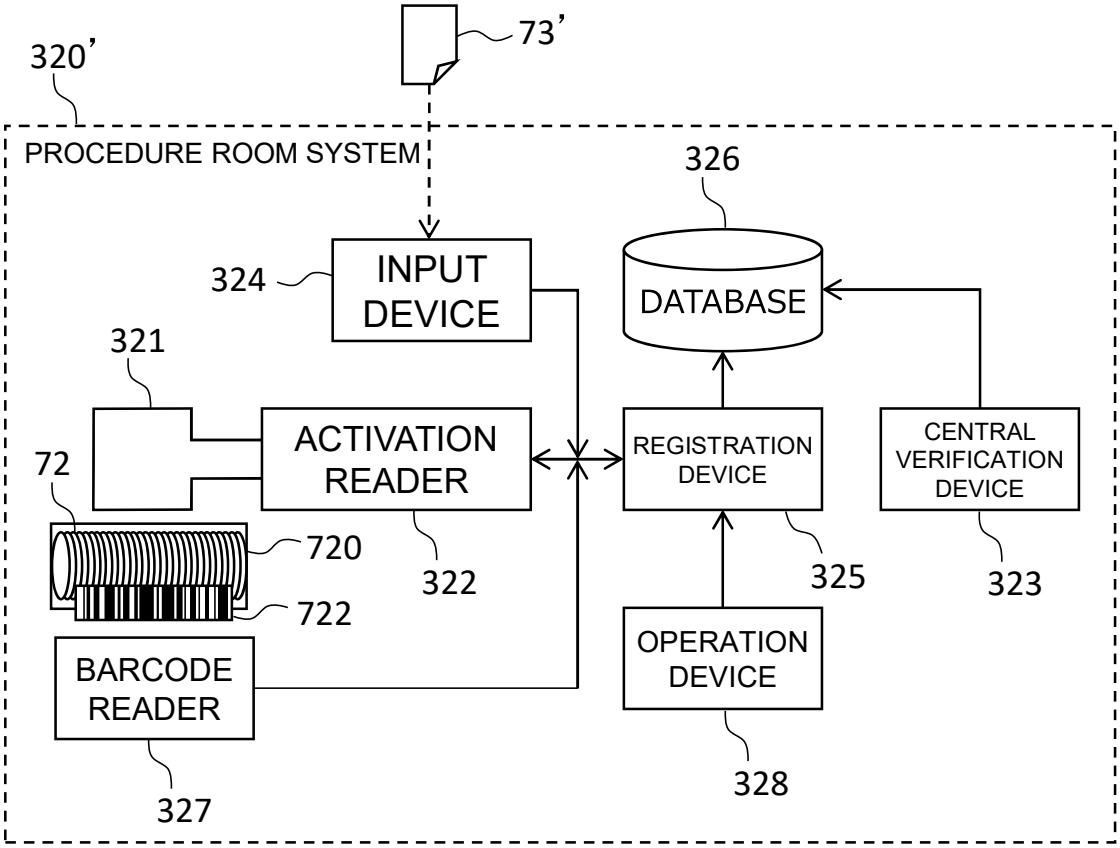
73'
320'
PROCEDURE ROOM SYSTEM
326
324
INPUT DEVICE
DATABASE
321
ACTIVATION READER
REGISTRATION DEVICE
CENTRAL VERIFICATION DEVICE
72
720
322
325
323
722
OPERATION DEVICE
BARCODE READER
328
327

FIG.8

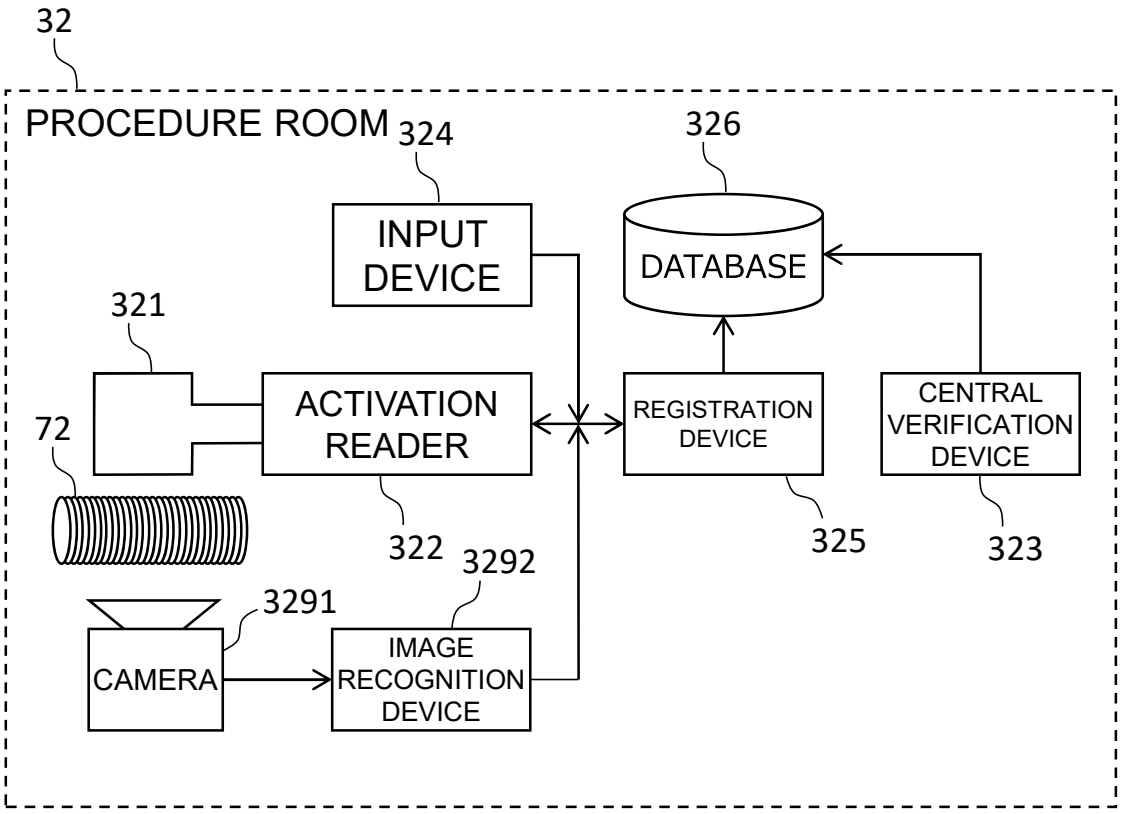
32
PROCEDURE ROOM
324
326
INPUT DEVICE
DATABASE
321
ACTIVATION READER
REGISTRATION DEVICE
CENTRAL VERIFICATION DEVICE
72
322
325
323
3292
3291
CAMERA
IMAGE RECOGNITION DEVICE

FIG.9

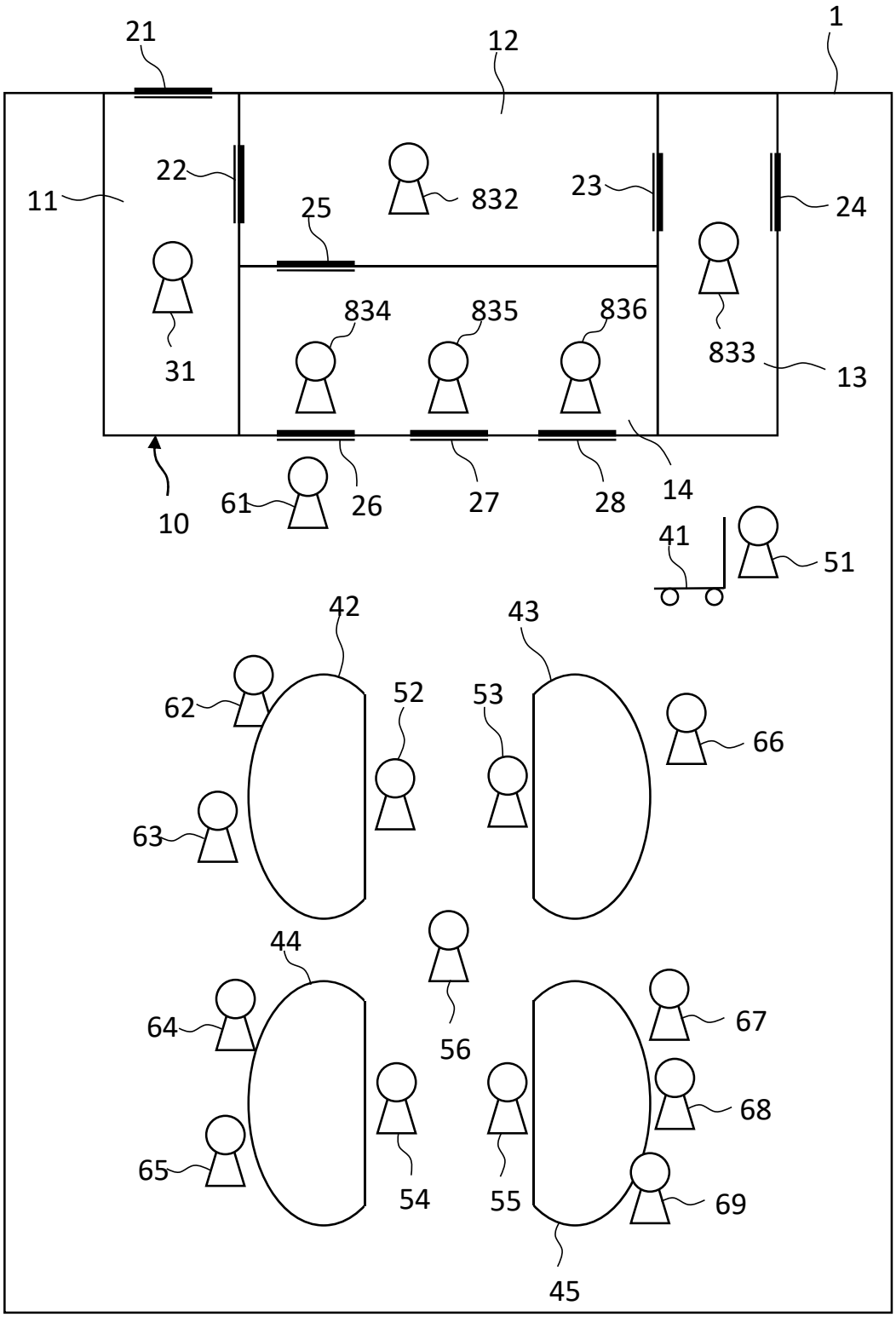
21
12
1
22
11
832
23
24
25
31
834
835
836
833
13
61
26
27
28
14
10
41
51
42
43
62
52
53
66
63
44
64
56
67
68
65
54
55
69
45

FIG.10

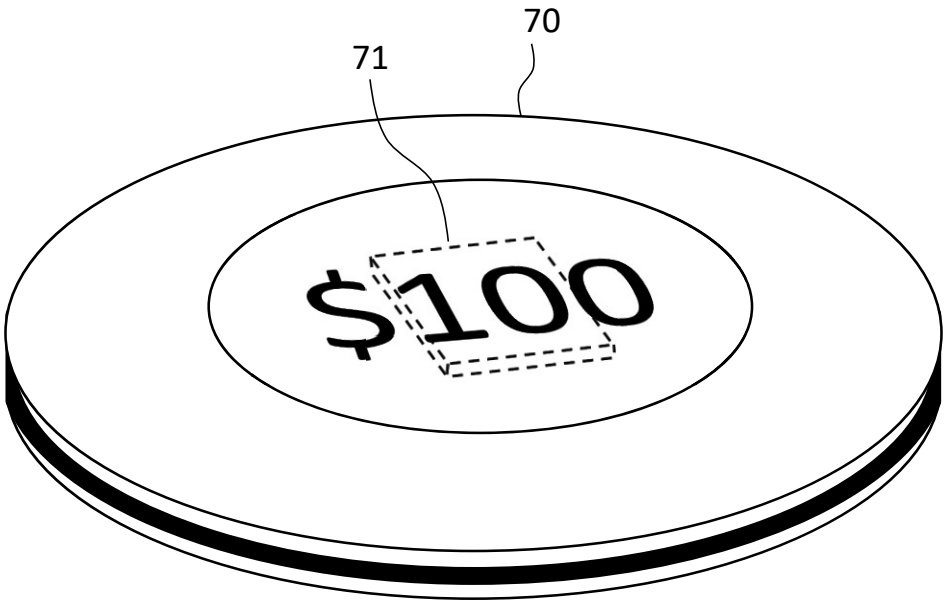

FIG.11

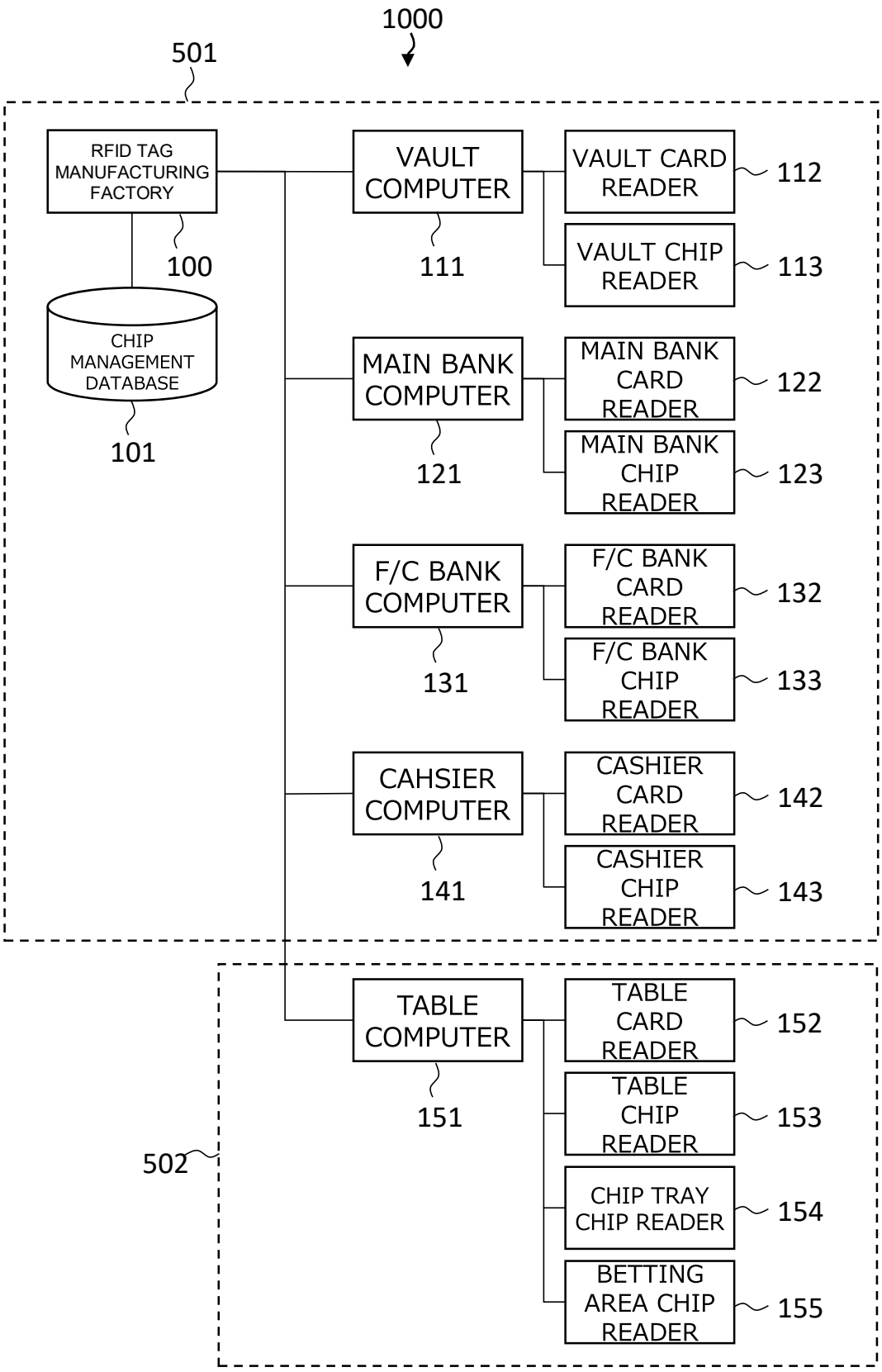
1000
501
RFID TAG MANUFACTURING FACTORY
100
CHIP MANAGEMENT DATABASE
101
VAULT COMPUTER
111
VAULT CARD READER
112
VAULT CHIP READER
113
MAIN BANK COMPUTER
121
MAIN BANK CARD READER
122
MAIN BANK CHIP READER
123
F/C BANK COMPUTER
131
F/C BANK CARD READER
132
F/C BANK CHIP READER
133
CAHSIER COMPUTER
141
CASHIER CARD READER
142
CASHIER CHIP READER
143
502
TABLE COMPUTER
151
TABLE CARD READER
152
TABLE CHIP READER
153
CHIP TRAY CHIP READER
154
BETTING AREA CHIP READER
155

FIG.12

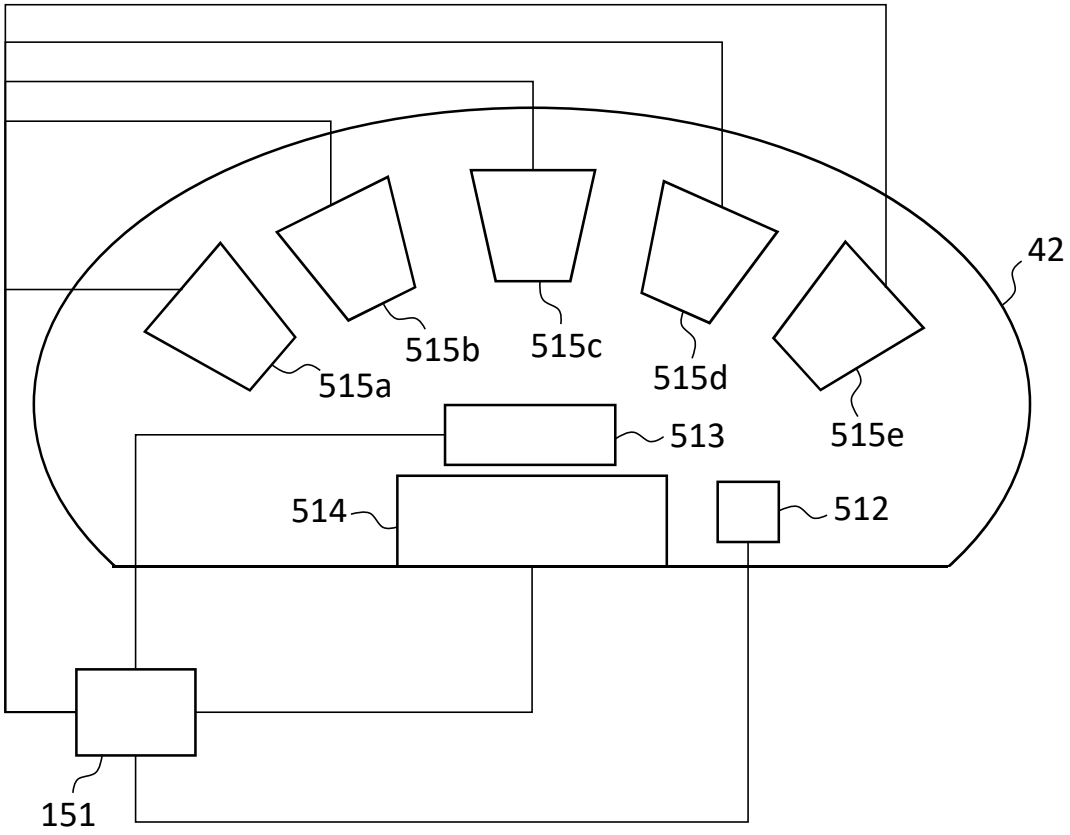

FIG.13

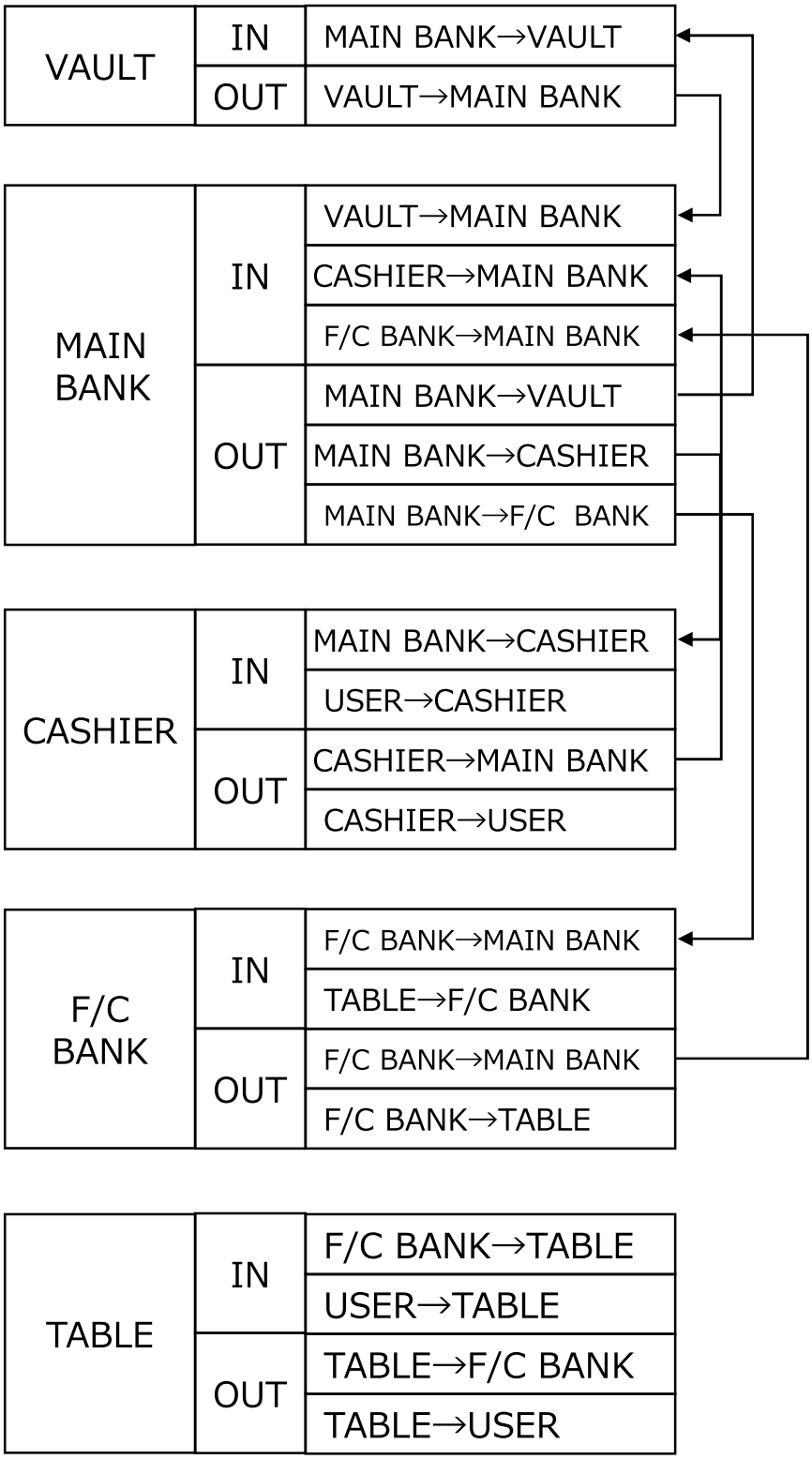
VAULT
IN
MAIN BANK→VAULT
OUT
VAULT→MAIN BANK
MAIN BANK
IN
VAULT→MAIN BANK
CASHIER→MAIN BANK
F/C BANK→MAIN BANK
OUT
MAIN BANK→VAULT
MAIN BANK→CASHIER
MAIN BANK→F/C BANK
CASHIER
IN
MAIN BANK→CASHIER
USER→CASHIER
OUT
CASHIER→MAIN BANK
CASHIER→USER
F/C BANK
IN
F/C BANK→MAIN BANK
TABLE→F/C BANK
OUT
F/C BANK→MAIN BANK
F/C BANK→TABLE
TABLE
IN
F/C BANK→TABLE
USER→TABLE
OUT
TABLE→F/C BANK
TABLE→USER

FIG.14

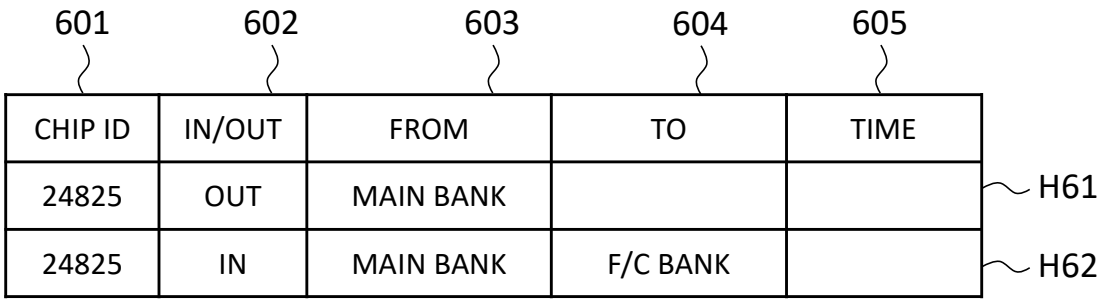
601
602
603
604
605
CHIP ID
IN/OUT
FROM
TO
TIME
24825
OUT
MAIN BANK
H61
24825
IN
MAIN BANK
F/C BANK
H62

FIG.15

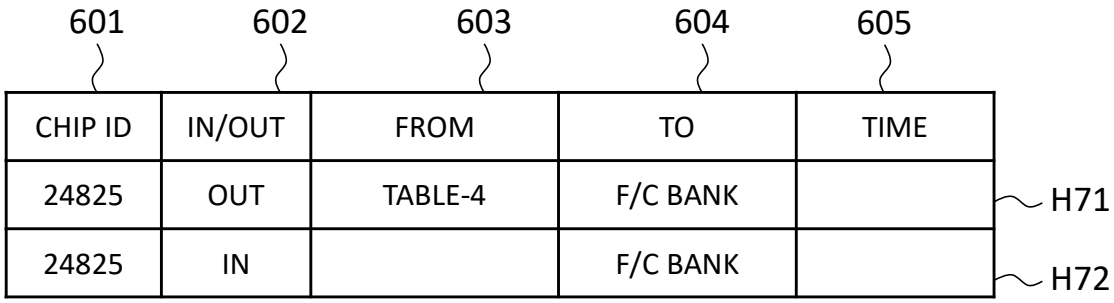
601
602
603
604
605
CHIP ID
IN/OUT
FROM
TO
TIME
24825
OUT
TABLE-4
F/C BANK
H71
24825
IN
F/C BANK
H72

FIG.16

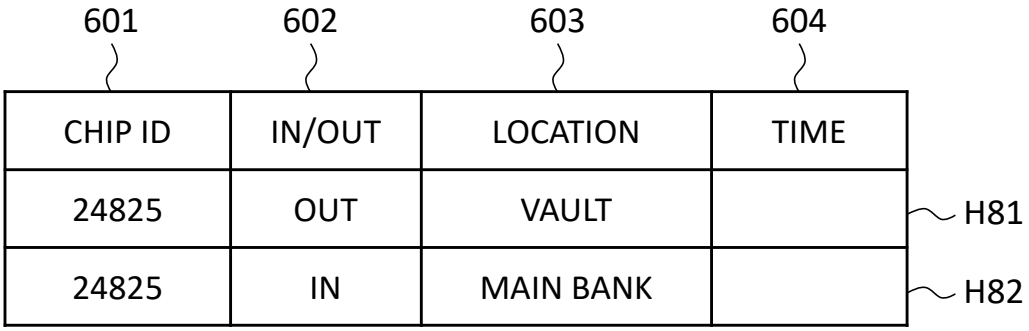
601
602
603
604
CHIP ID
IN/OUT
LOCATION
TIME
24825
OUT
VAULT
H81
24825
IN
MAIN BANK
H82

FIG.17

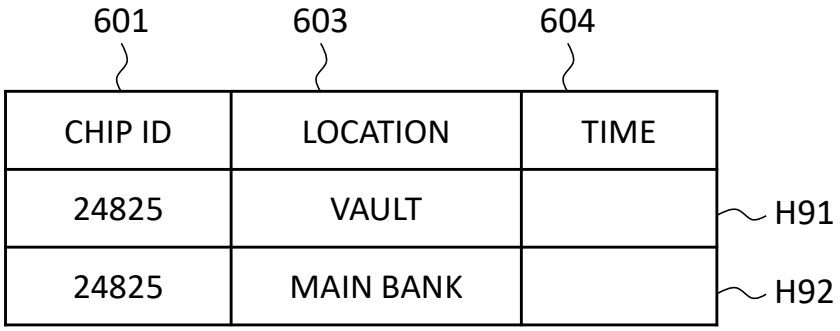
601
603
604
CHIP ID
LOCATION
TIME
24825
VAULT
H91
24825
MAIN BANK
H92

FIG.18

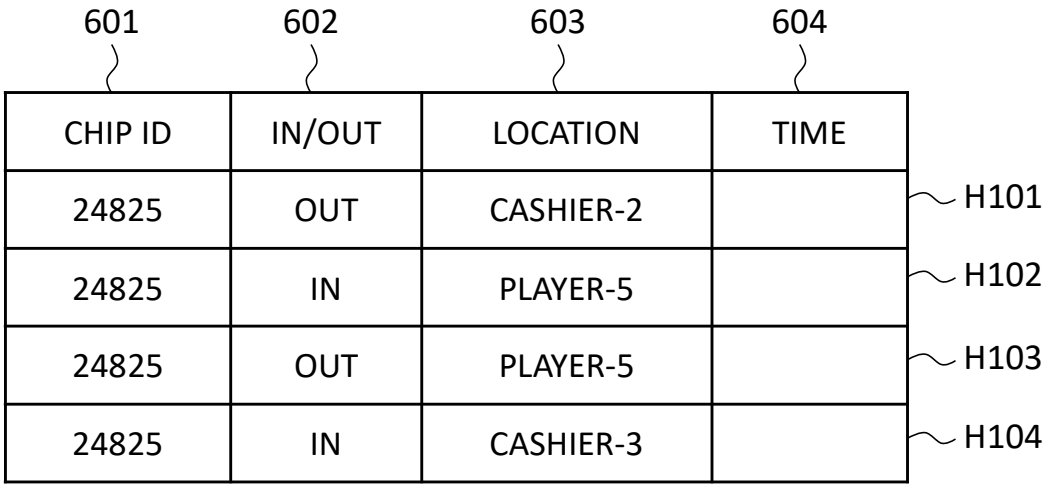
601
602
603
604
CHIP ID
IN/OUT
LOCATION
TIME
24825
OUT
CASHIER-2
H101
24825
IN
PLAYER-5
H102
24825
OUT
PLAYER-5
H103
24825
IN
CASHIER-3
H104

FIG.19