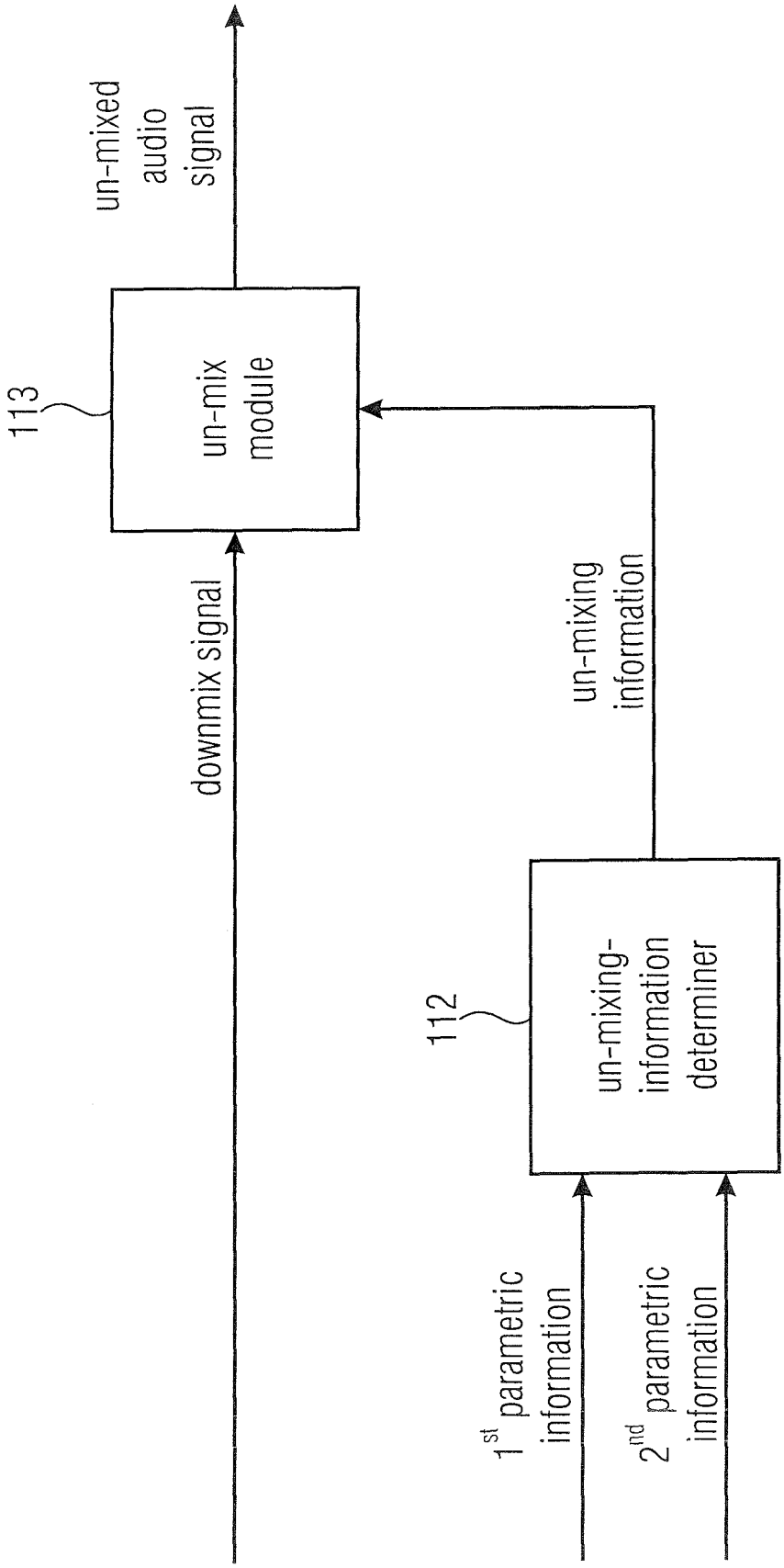
un-mixed audio signal
113
un-mix module
downmix signal
un-mixing information
112
un-mixing-information determiner
1st parametric information
2nd parametric information

FIGURE 1A

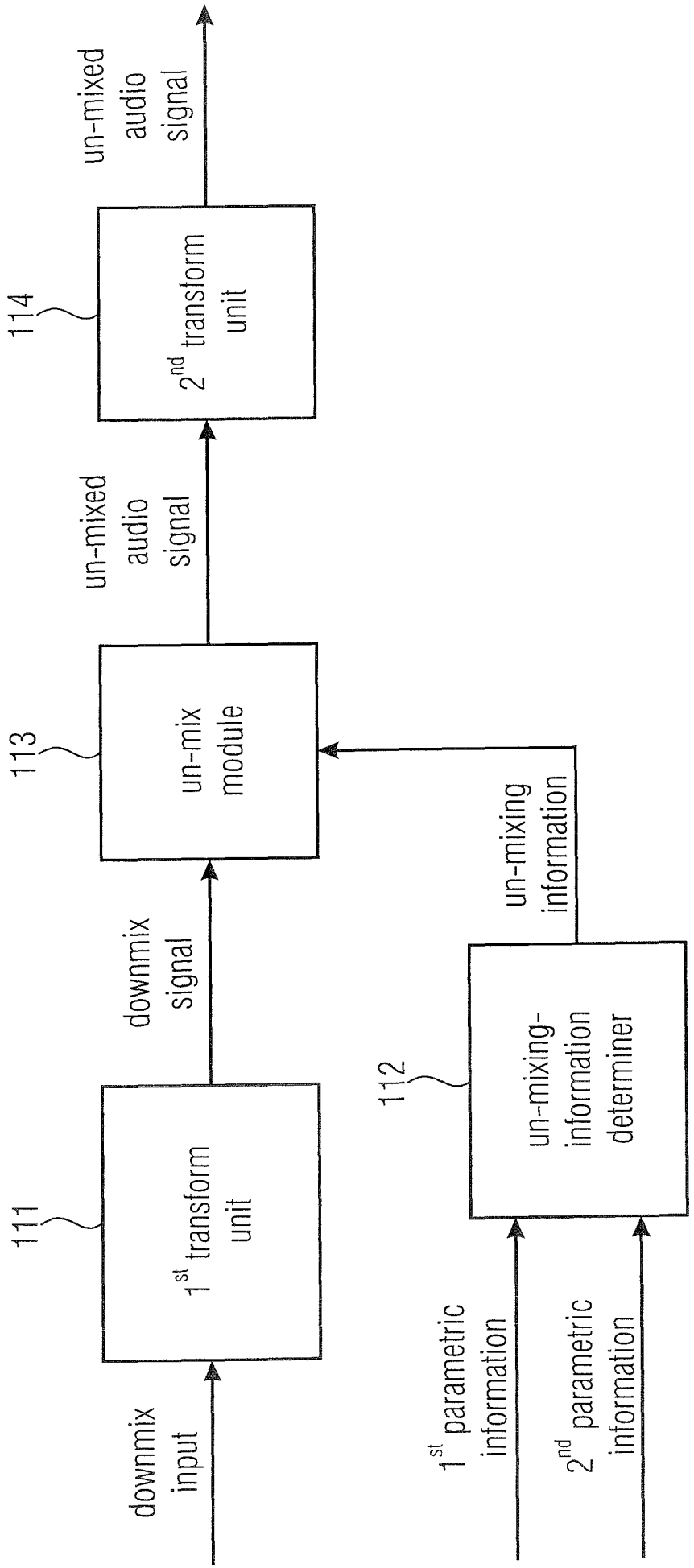
downmix input
111
1st transform unit
downmix signal
113
un-mix module
un-mixed audio signal
114
2nd transform unit
un-mixed audio signal
1st parametric information
2nd parametric information
112
un-mixing-information determiner
un-mixing information

FIGURE 1B

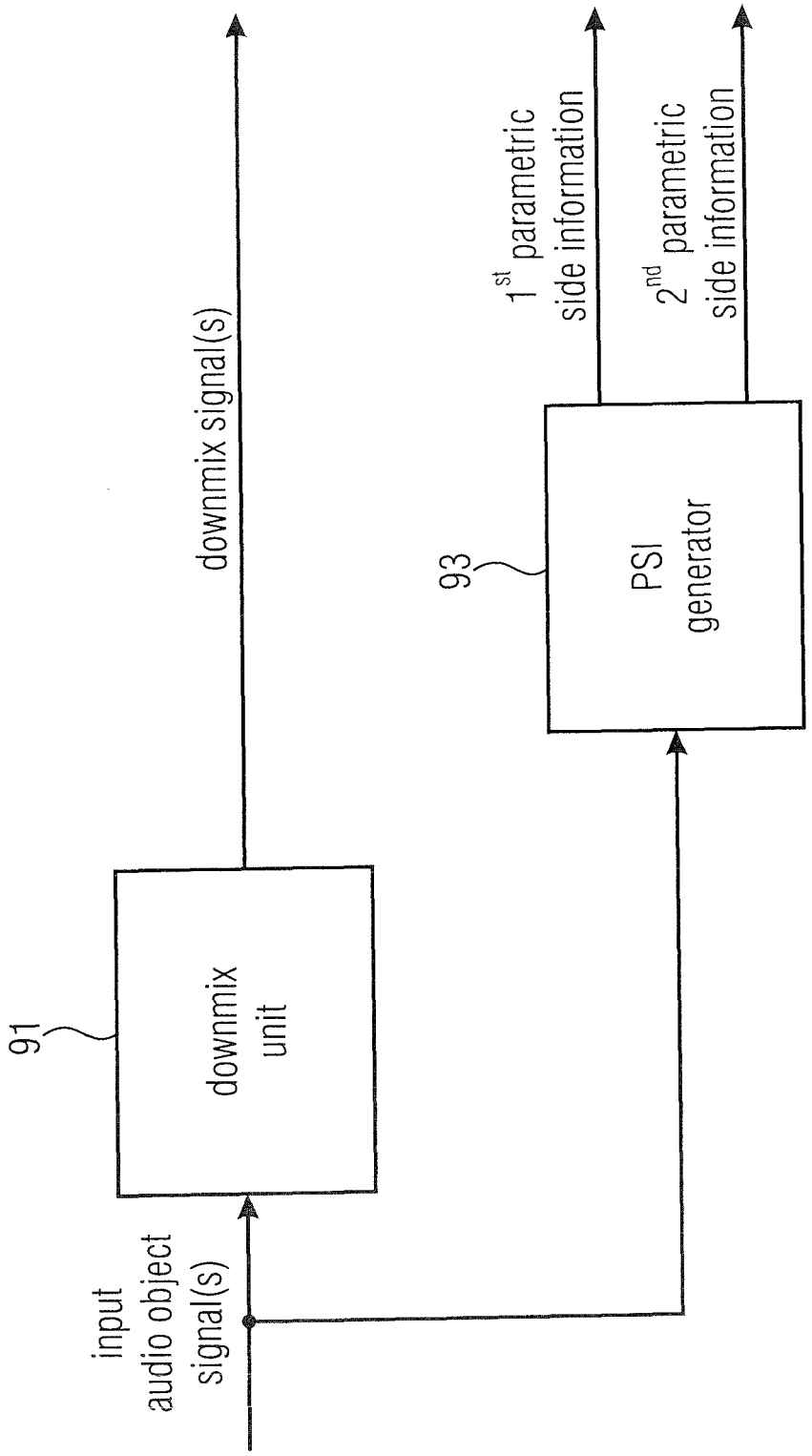
input audio object signal(s)
91
downmix unit
downmix signal(s)
93
PSI generator
1st parametric side information
2nd parametric side information

FIGURE 2A

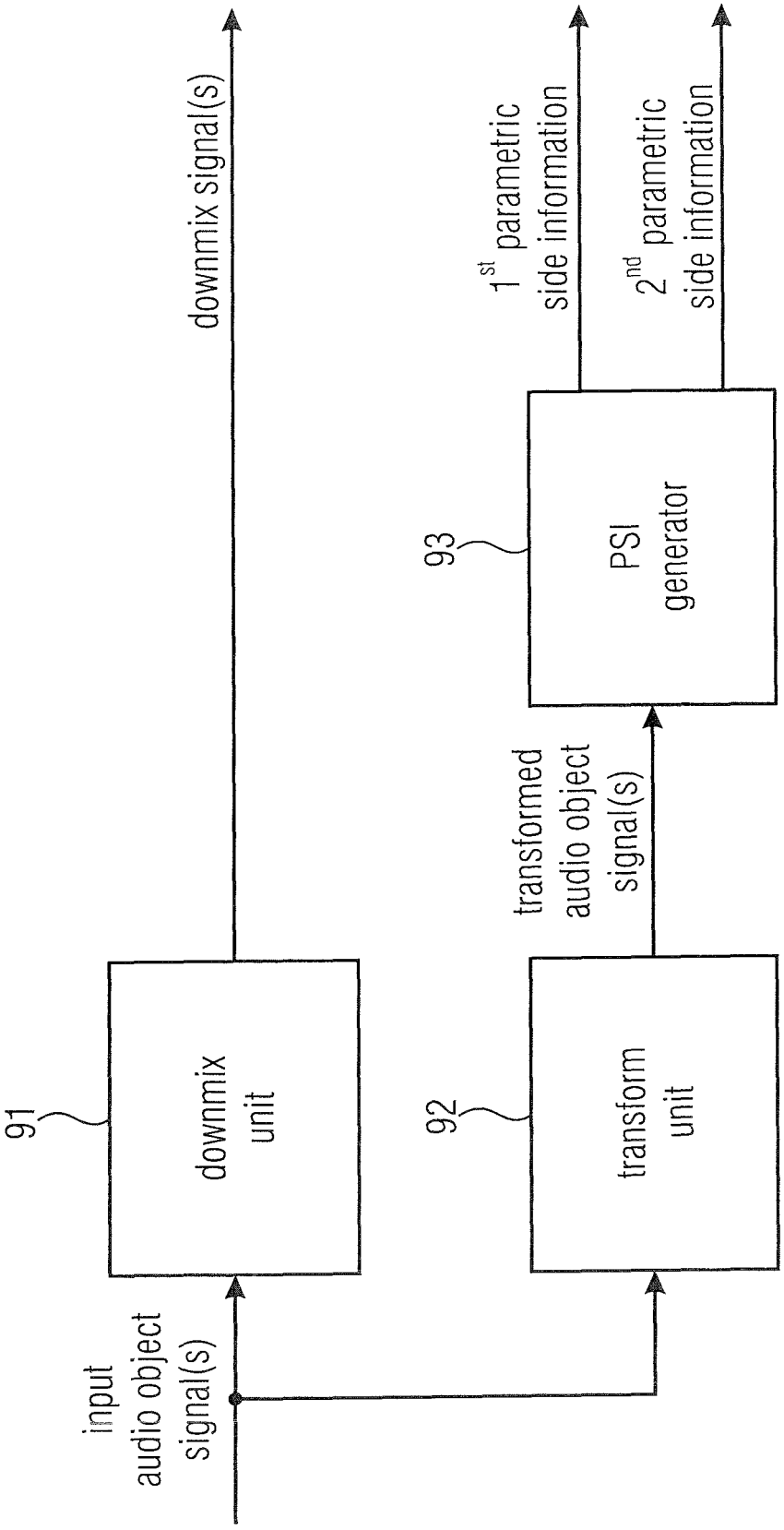
input audio object signal(s)
91
downmix unit
downmix signal(s)
92
transform unit
transformed audio object signal(s)
93
PSI generator
1st parametric side information
2nd parametric side information

FIGURE 2B

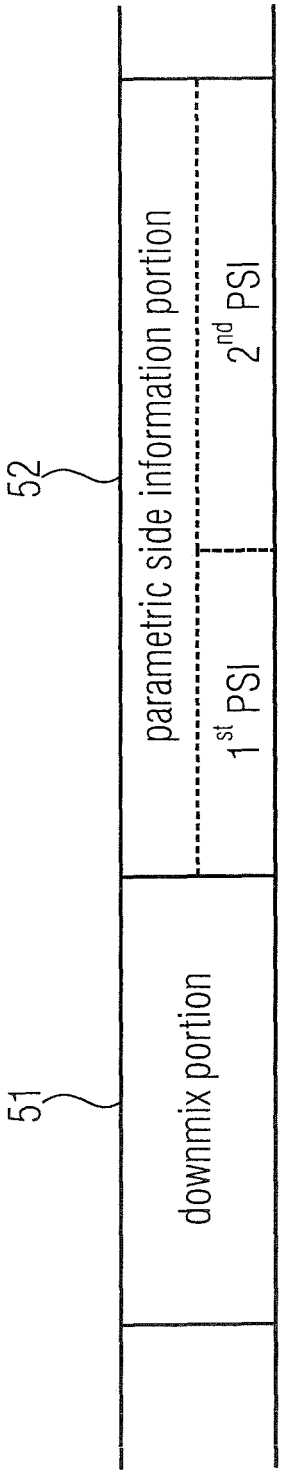
52
parametric side information portion
1st PSI
2nd PSI
51
downmix portion

FIGURE 2C

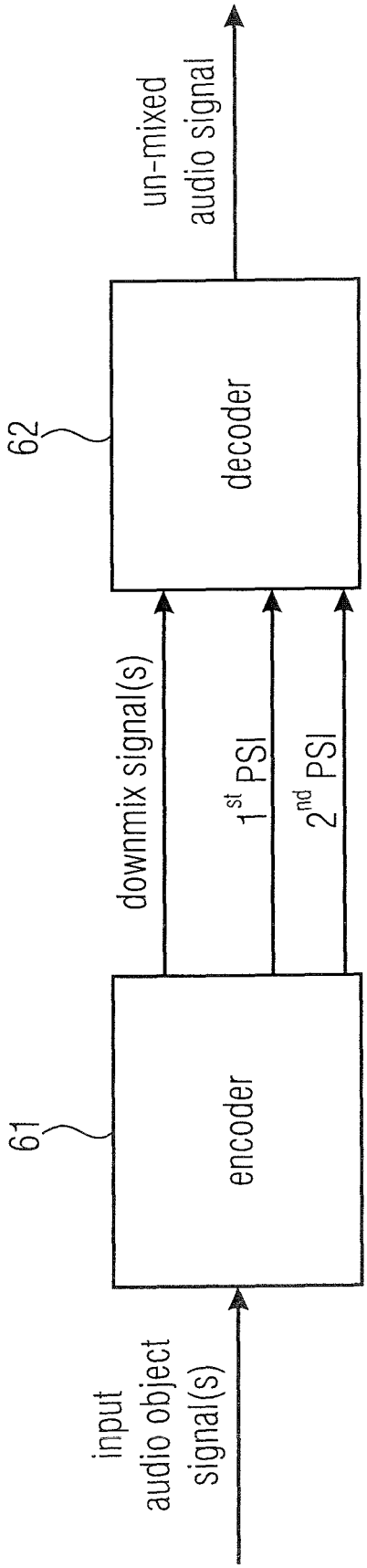
input audio object signal(s)
61
encoder
downmix signal(s)
1st PSI
2nd PSI
62
decoder
un-mixed audio signal

FIGURE 3

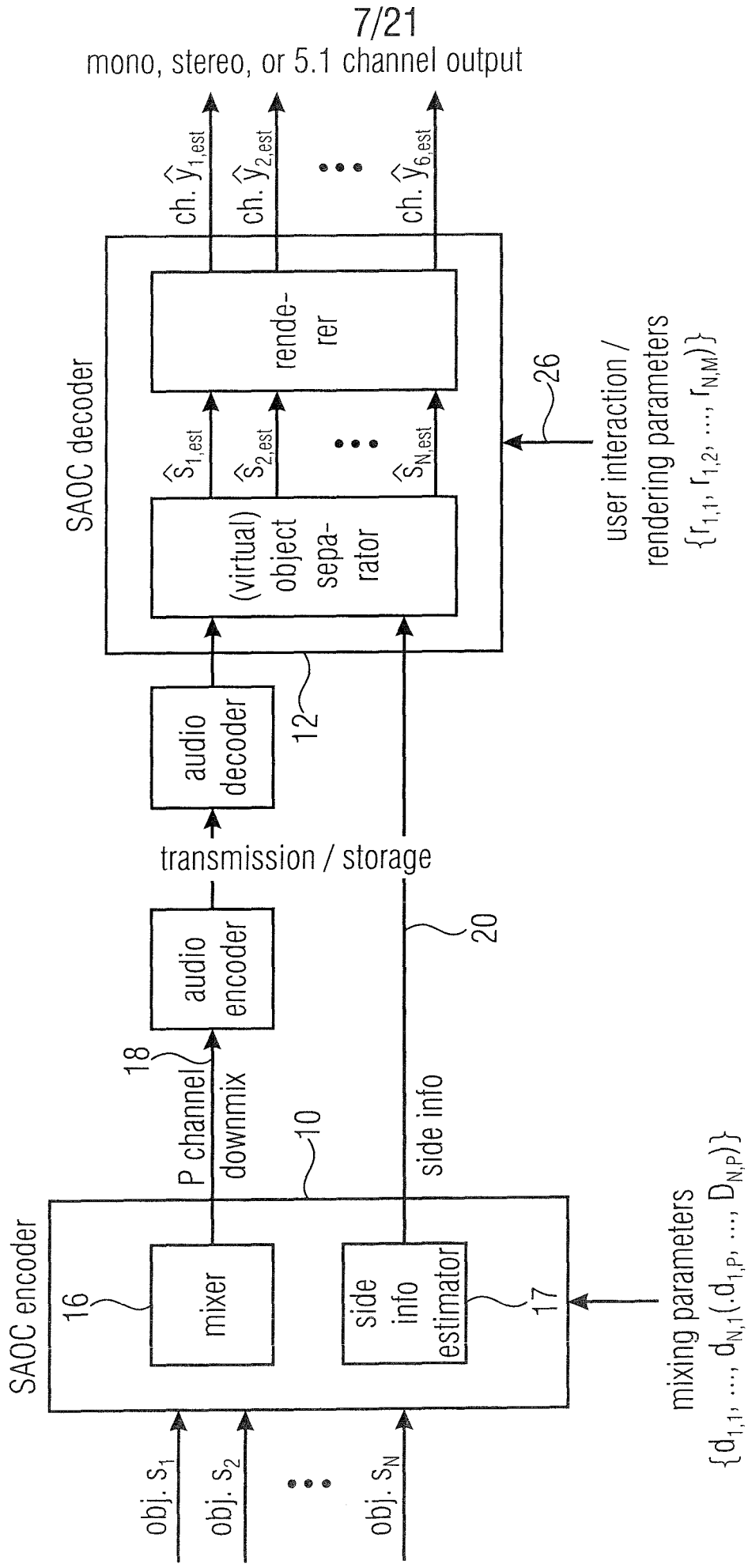
mono, stereo, or 5.1 channel output
ch. $\hat{y}_{1,est}$
ch. $\hat{y}_{2,est}$
ch. $\hat{y}_{6,est}$
SAOC decoder
renderer
(virtual) object separator
$\hat{s}_{1,est}$
$\hat{s}_{2,est}$
$\hat{s}_{N,est}$
26
user interaction / rendering parameters
$\{r_{1,1}, r_{1,2}, ..., r_{N,M})\}$
audio decoder
12
transmission / storage
audio encoder
18
P channel downmix
10
side info
20
SAOC encoder
16
mixer
side info estimator
17
mixing parameters
$\{d_{1,1}, ..., d_{N,1}(.d_{1,P}, ..., D_{N,P})\}$
obj. s_1
obj. s_2
obj. s_N

FIGURE 4

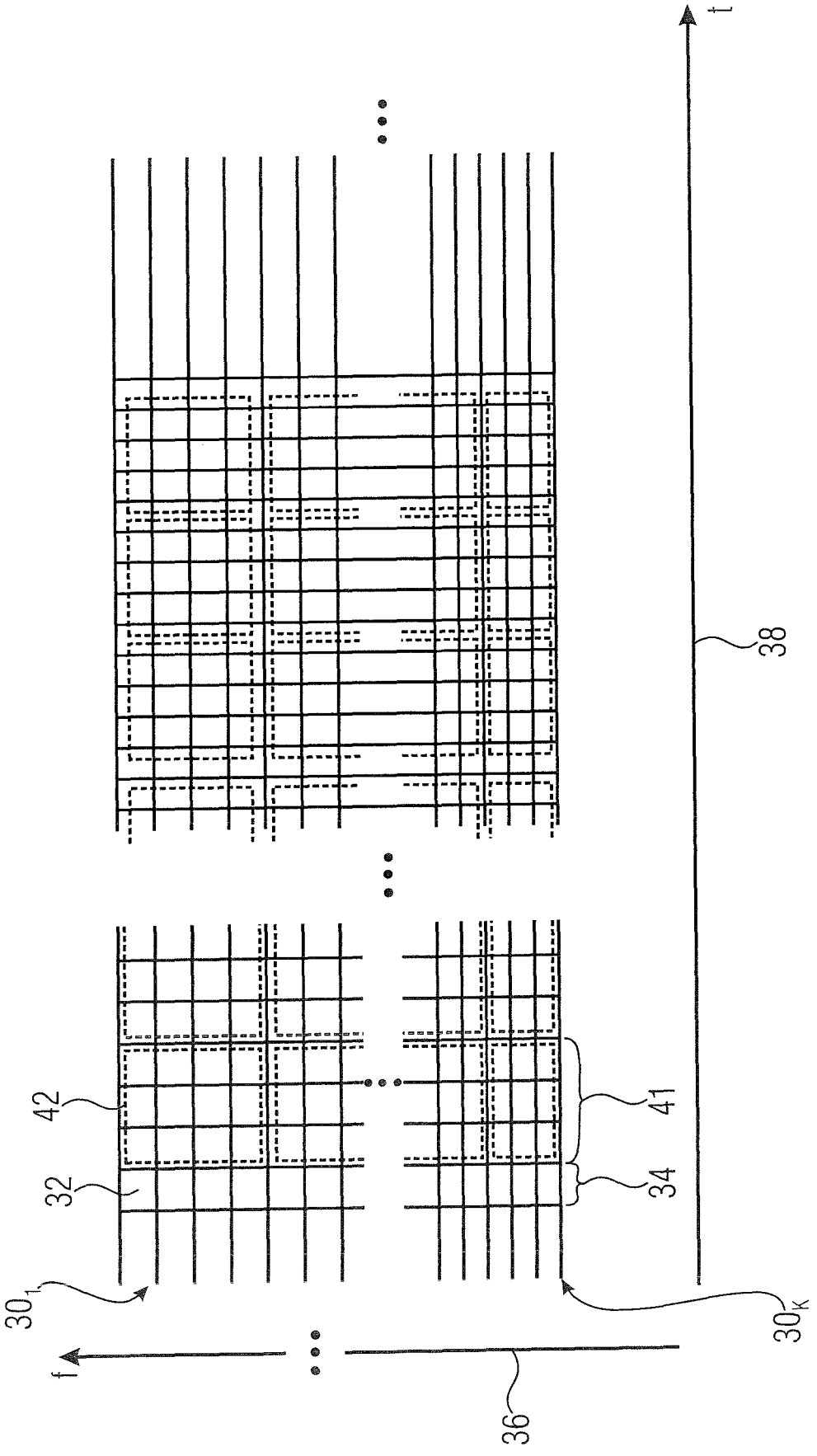

FIGURE 5

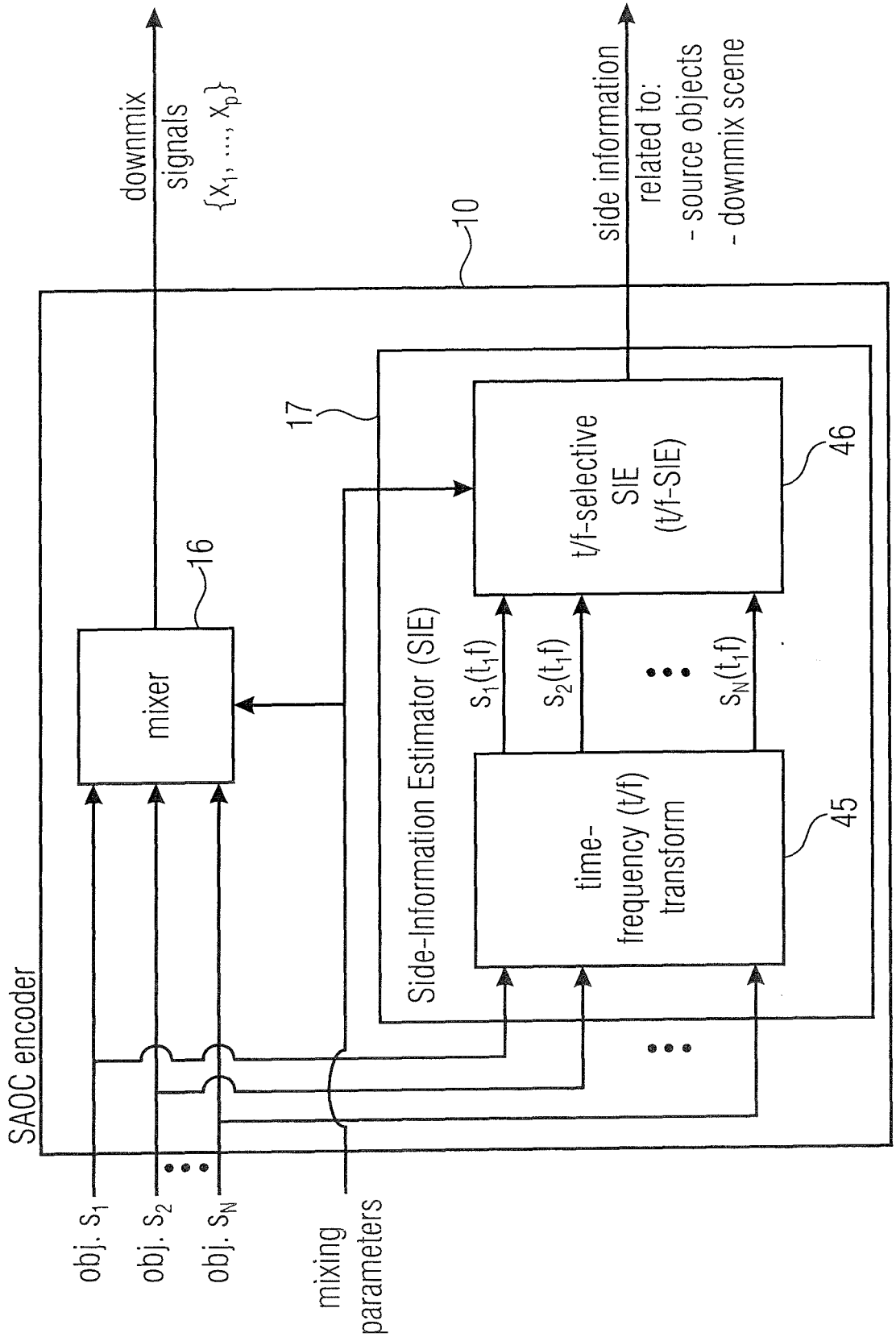
SAOC encoder
obj. s_1
obj. s_2
obj. s_N
mixing parameters
mixer
16
time-frequency (t/f) transform
45
$s_1(t_1f)$
$s_2(t_1f)$
$s_N(t_1f)$
Side-Information Estimator (SIE)
17
t/f-selective SIE (t/f-SIE)
46
10
downmix signals $\{x_1, ..., x_p\}$
side information related to:
- source objects
- downmix scene

FIGURE 6

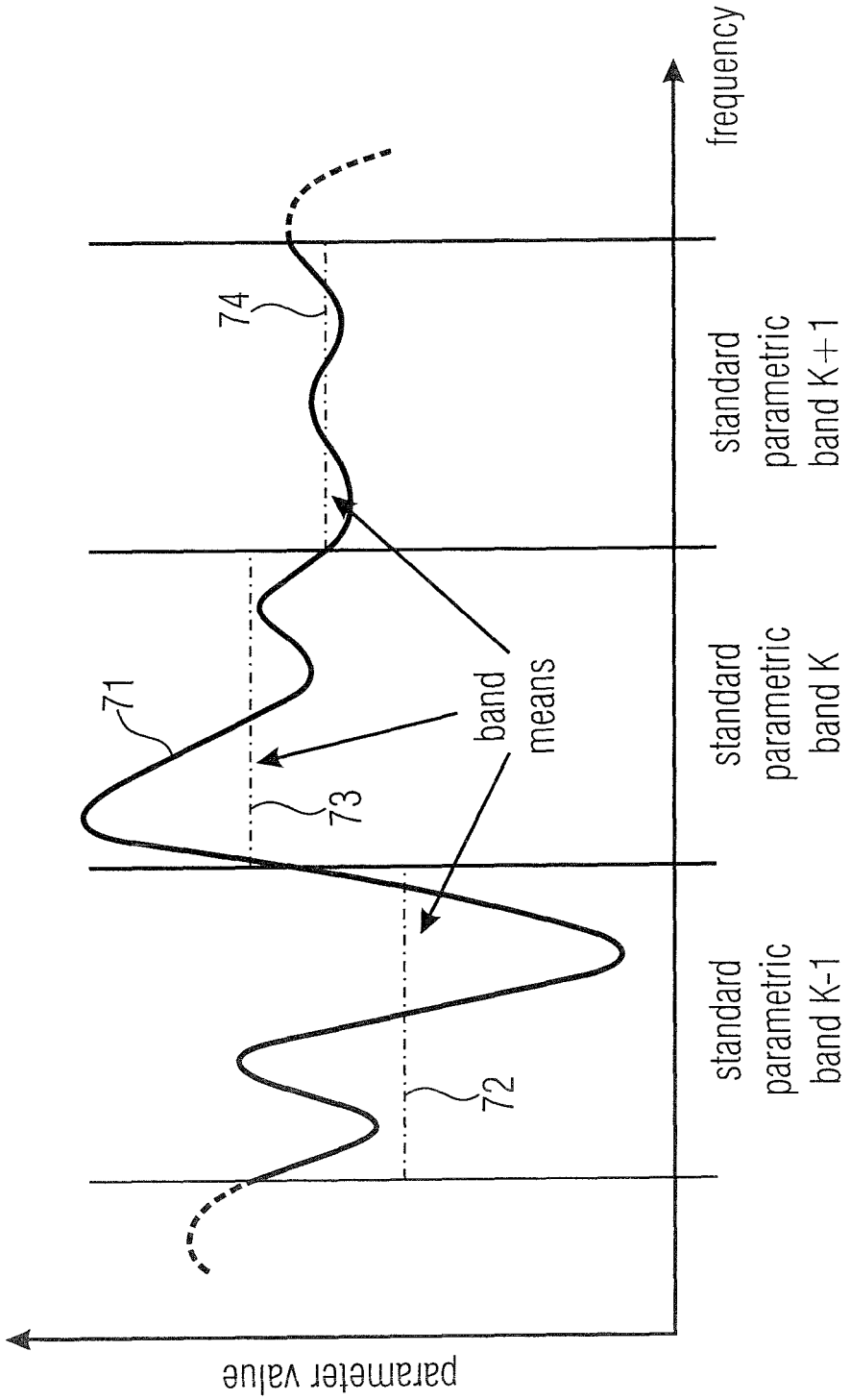
parameter value
frequency
standard parametric band K-1
standard parametric band K
standard parametric band K+1
band means
71
72
73
74

FIGURE 7

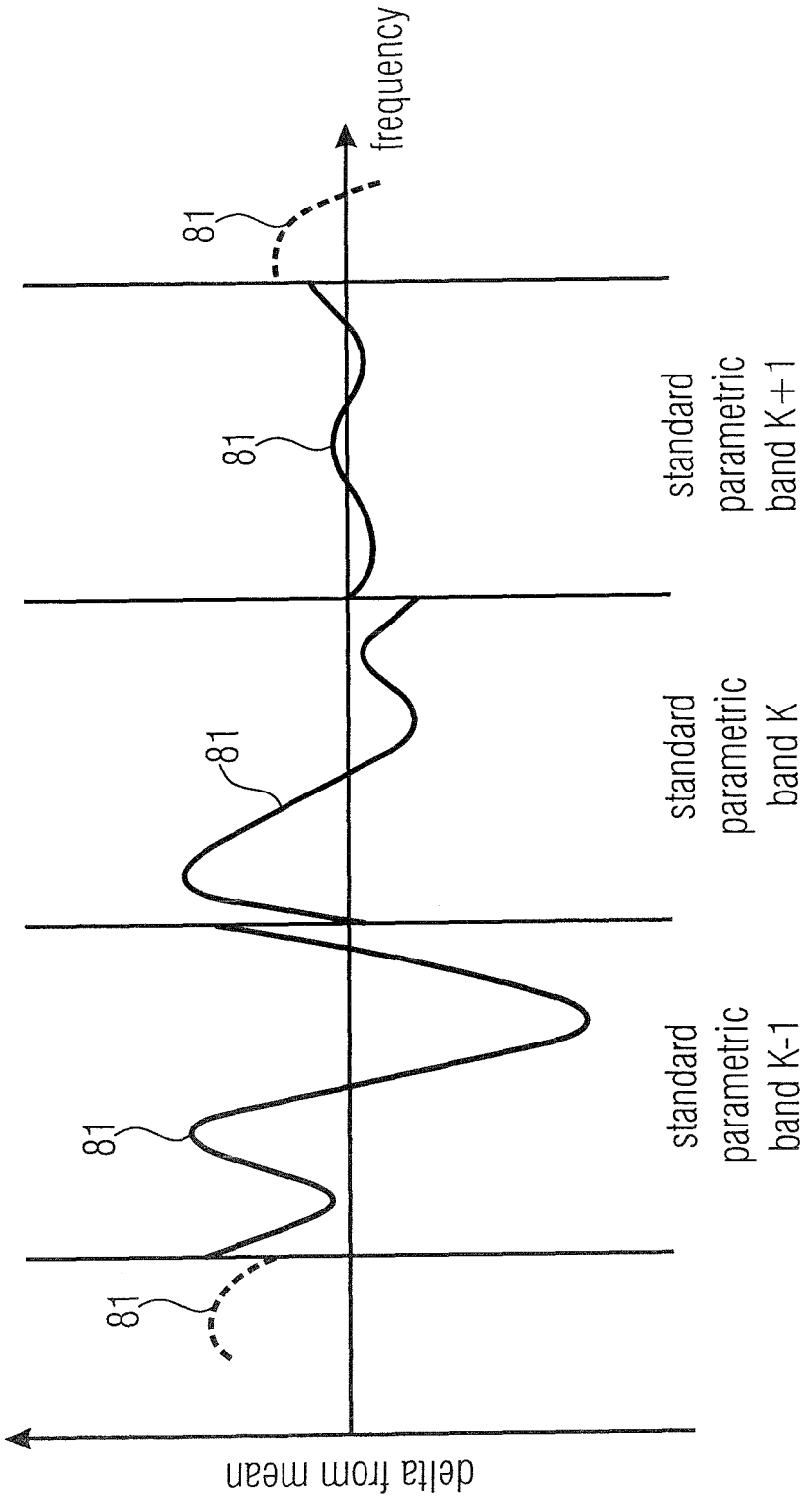
frequency
delta from mean
81
81
81
81
81
standard parametric band K-1
standard parametric band K
standard parametric band K+1

FIGURE 8

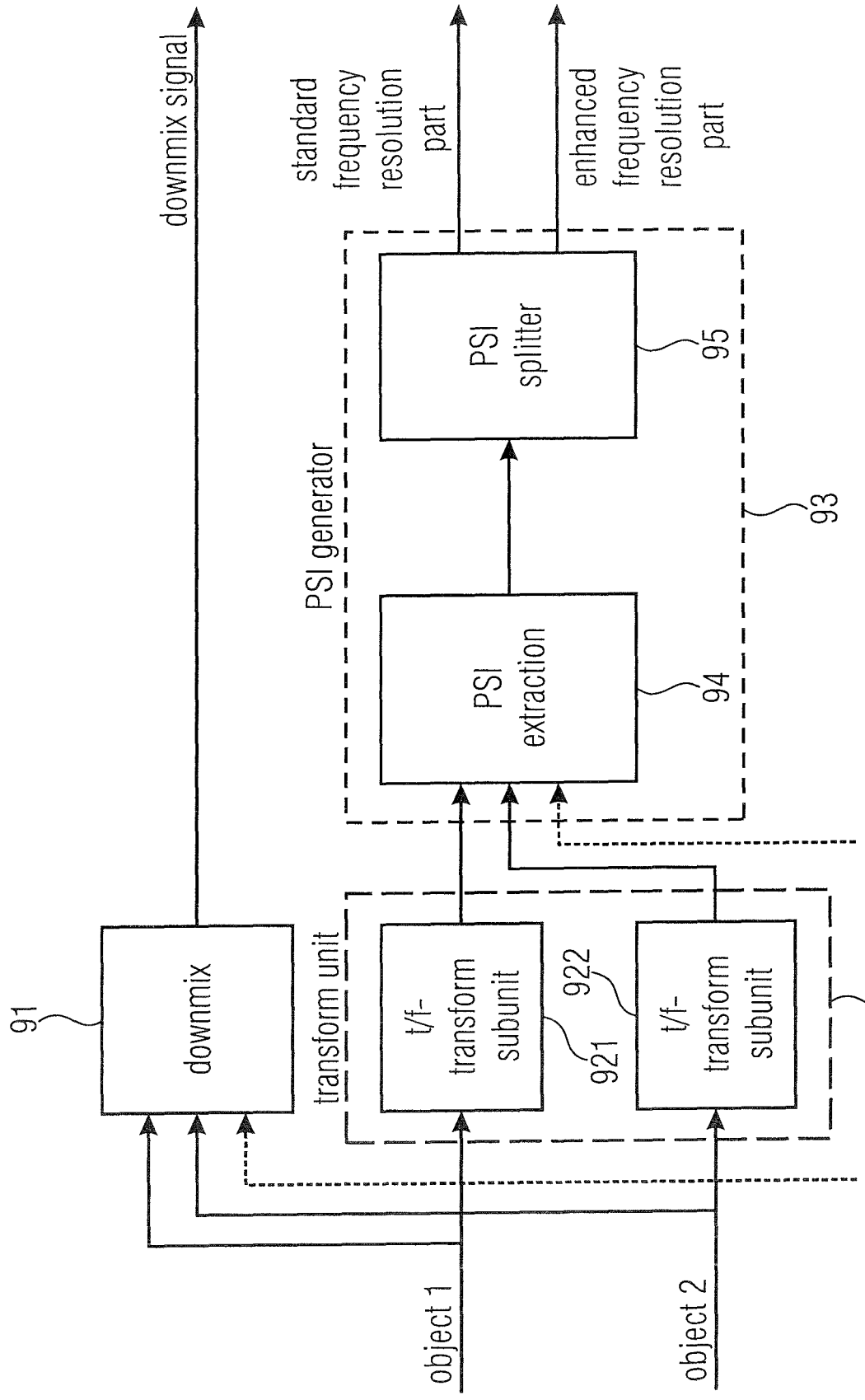
downmix signal
standard frequency resolution part
enhanced frequency resolution part
PSI splitter
95
PSI generator
93
PSI extraction
94
91
downmix
transform unit
t/f-transform subunit
922
921
t/f-transform subunit
92
object 1
object 2

FIGURE 9

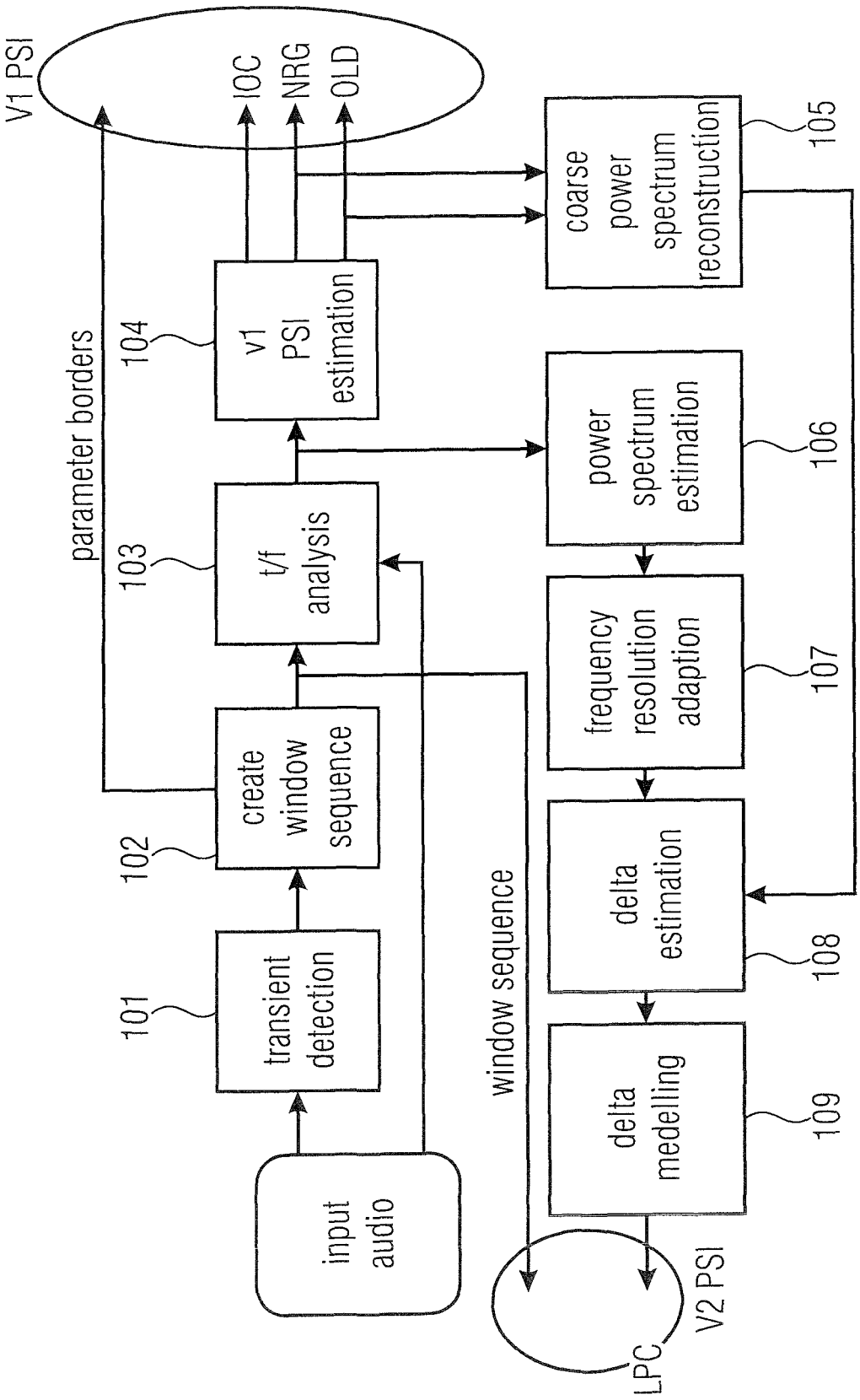
V1 PSI
IOC
NRG
OLD
parameter borders
104
v1 PSI estimation
103
t/f analysis
102
create window sequence
101
transient detection
input audio
window sequence
coarse power spectrum reconstruction
105
power spectrum estimation
106
frequency resolution adaption
107
delta estimation
108
delta medelling
109
V2 PSI
LPC

FIGURE 10

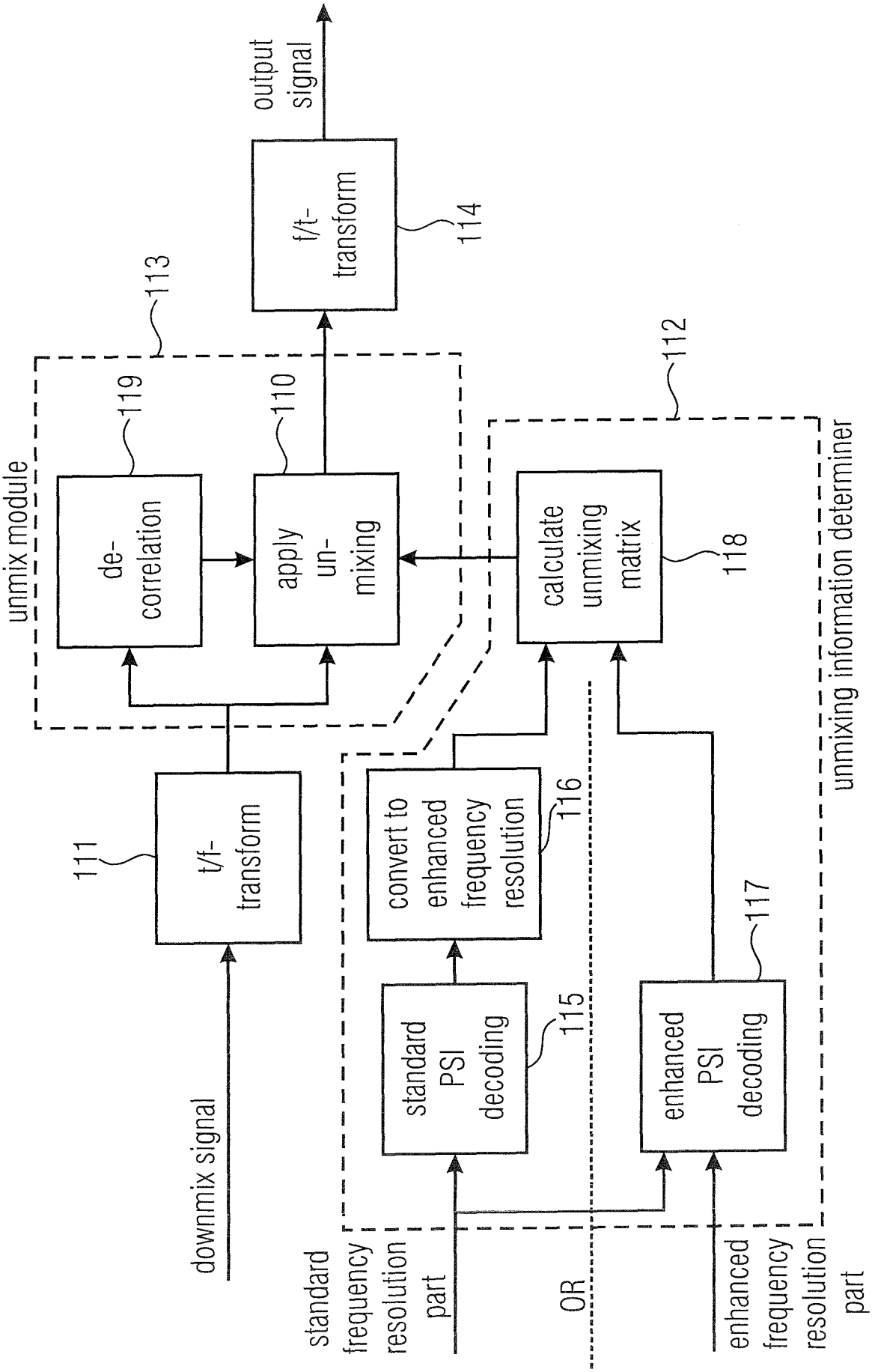
output signal
f/t-transform
114
113
unmix module
119
de-correlation
110
apply un-mixing
112
calculate unmixing matrix
118
unmixing information determiner
111
t/f-transform
convert to enhanced frequency resolution
116
standard PSI decoding
115
enhanced PSI decoding
117
downmix signal
standard frequency resolution part
OR
enhanced frequency resolution part

FIGURE 11

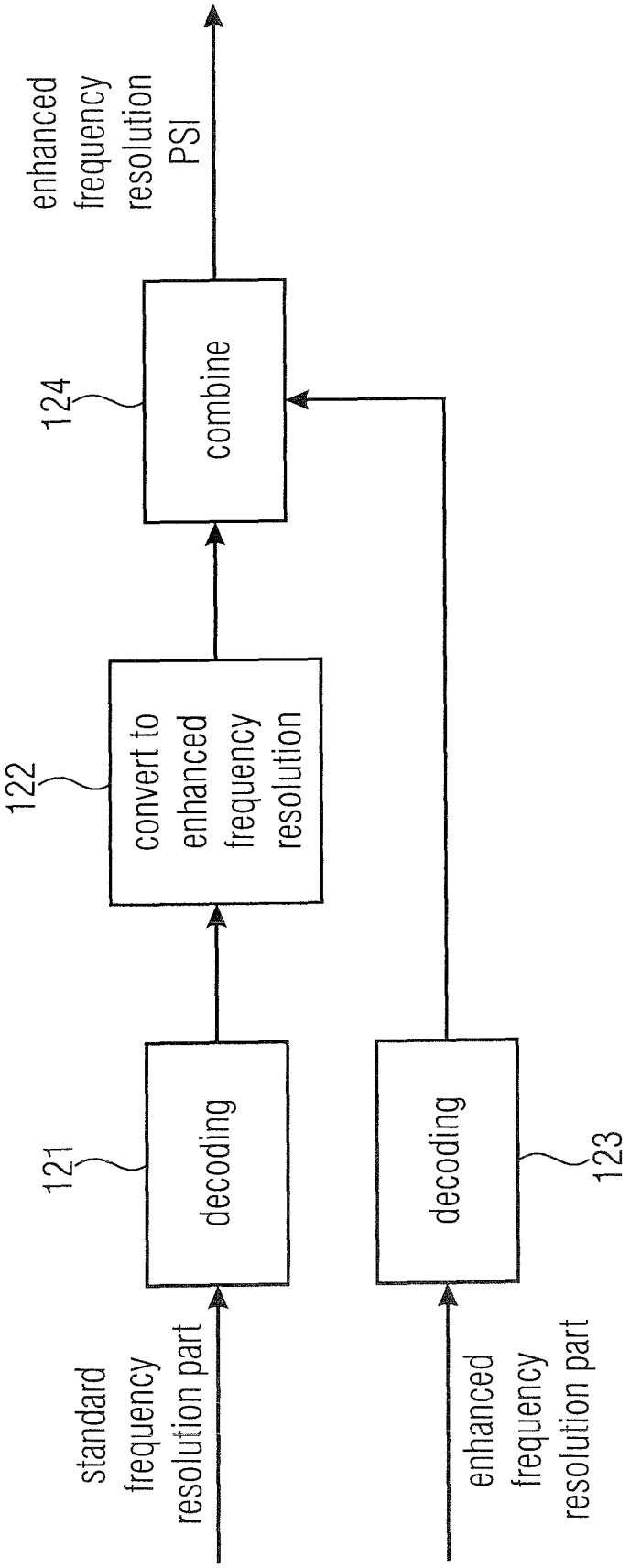
standard frequency resolution part
enhanced frequency resolution part
decoding
121
decoding
123
convert to enhanced frequency resolution
122
combine
124
enhanced frequency resolution PSI

FIGURE 12

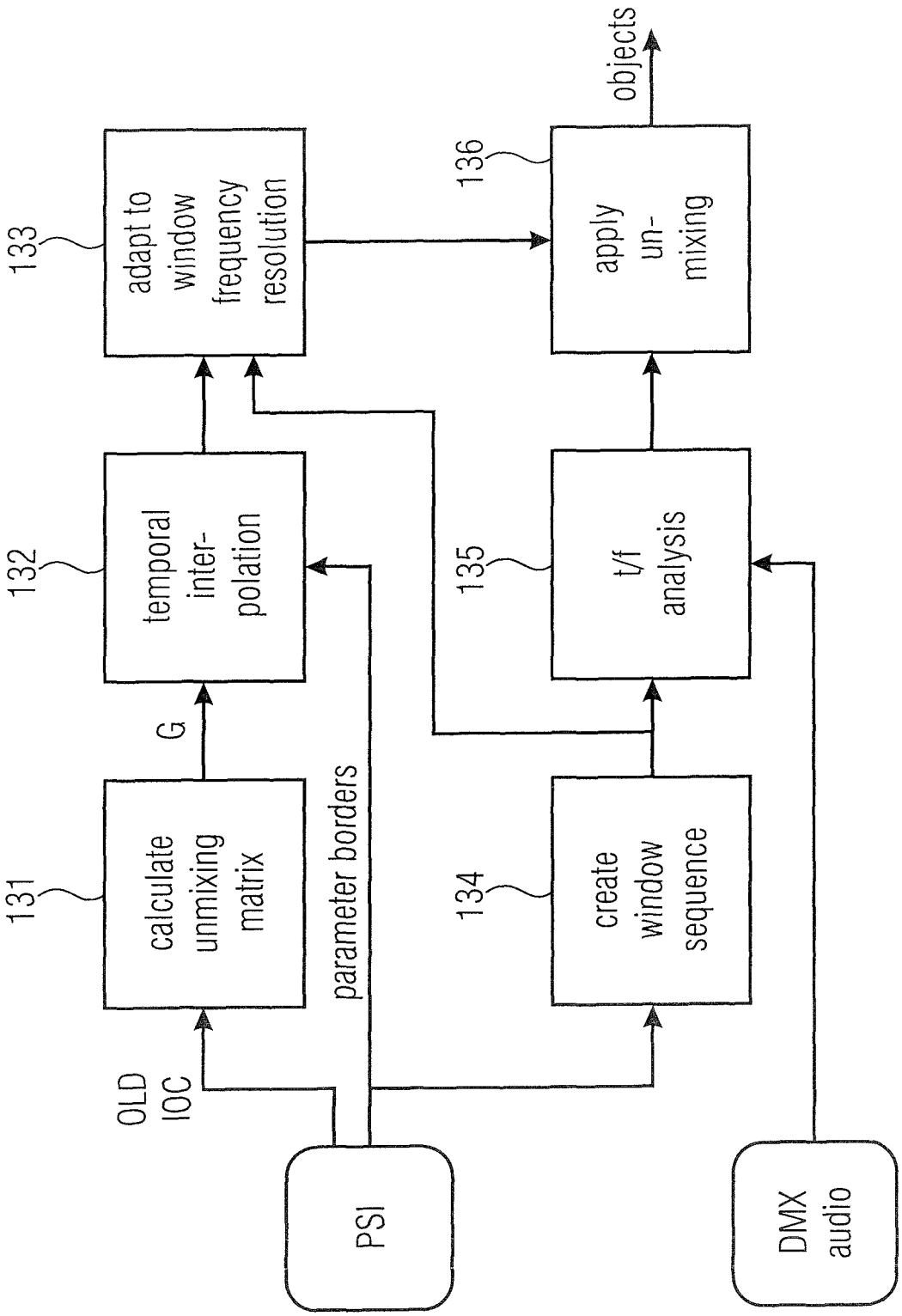
objects
136
apply un- mixing
133
adapt to window frequency resolution
135
t/f analysis
132
temporal inter- polation
G
131
calculate unmixing matrix
134
create window sequence
parameter borders
OLD IOC
PSI
DMX audio

FIGURE 13

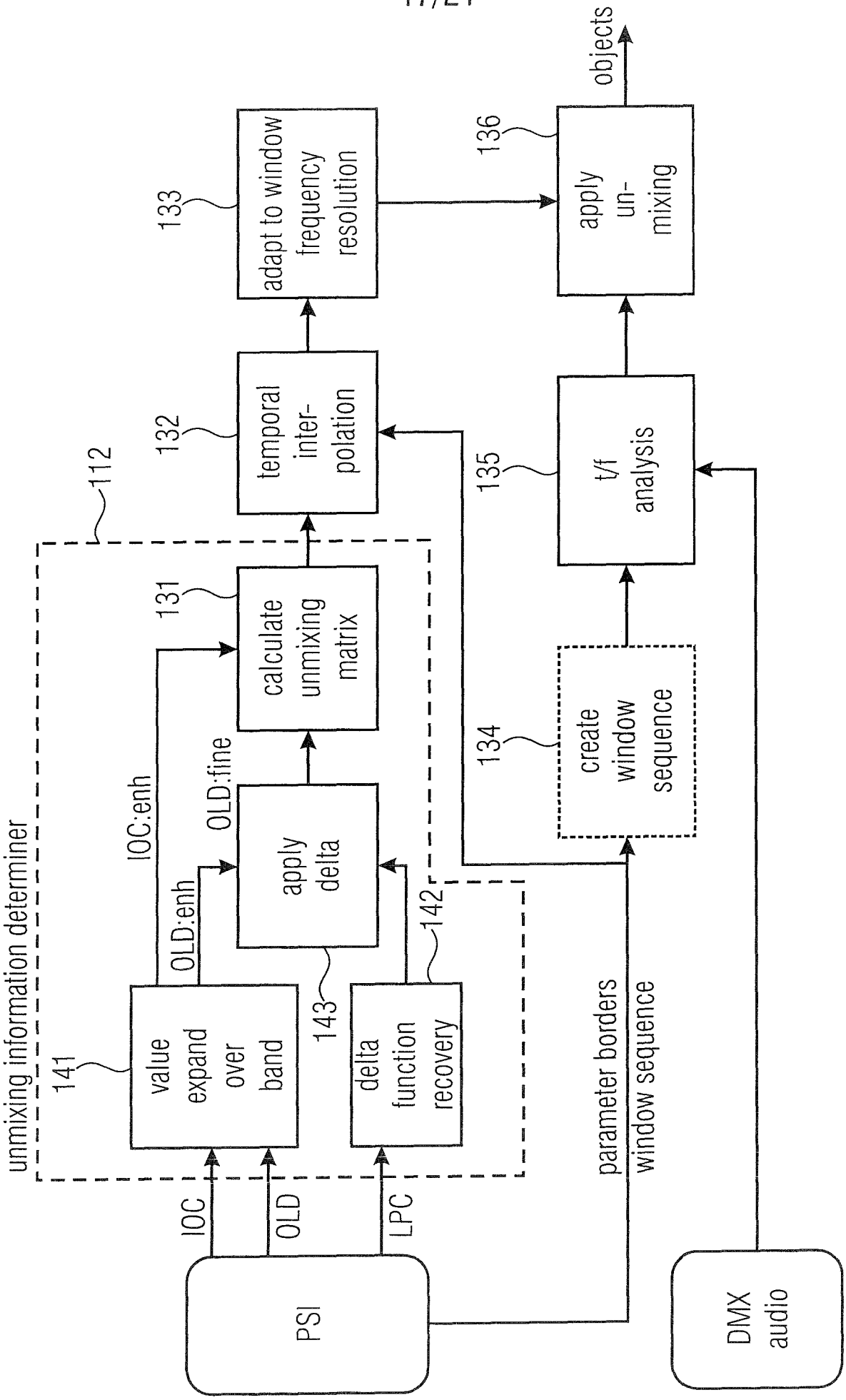
unmixing information determiner
112
141
value expand over band
143
delta function recovery
142
apply delta
131
calculate unmixing matrix
132
temporal inter-polation
133
adapt to window frequency resolution
134
create window sequence
135
t/f analysis
136
apply un-mixing
objects
IOC
OLD
LPC
IOC:enh
OLD:enh
OLD:fine
parameter borders
window sequence
PSI
DMX audio

FIGURE 14

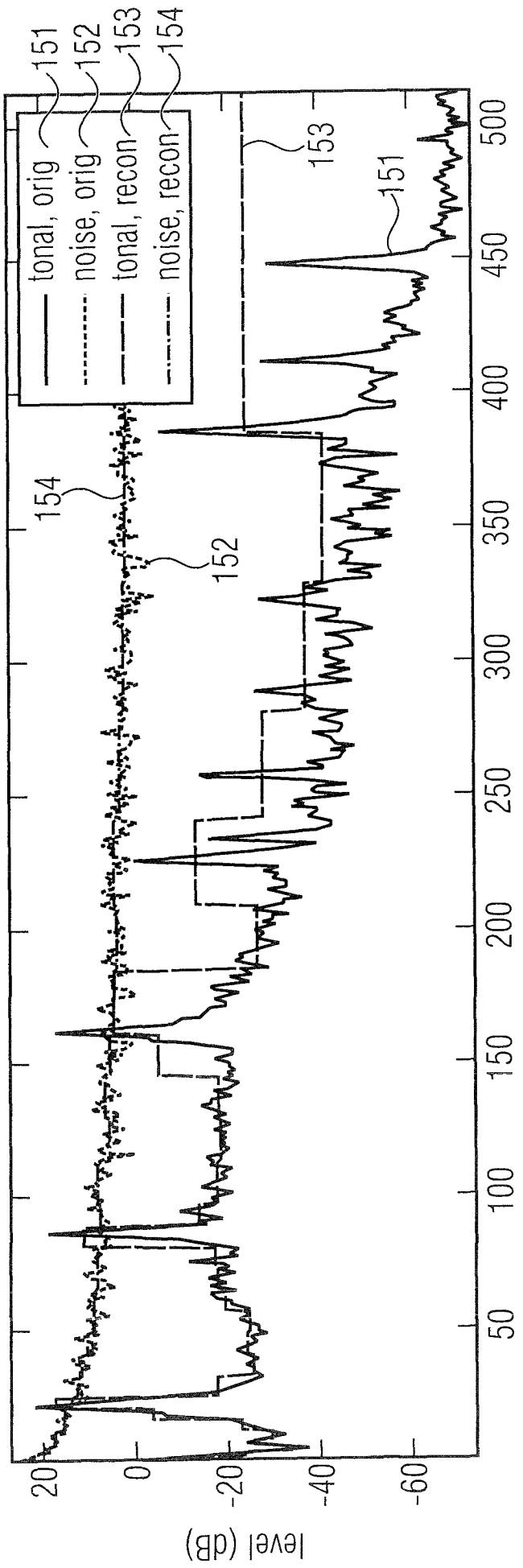
151
152
153
154
tonal, orig
noise, orig
tonal, recon
noise, recon
154
152
153
151
20
0
-20
-40
-60
level (dB)
50
100
150
200
250
300
350
400
450
500
frequency bin

FIGURE 15

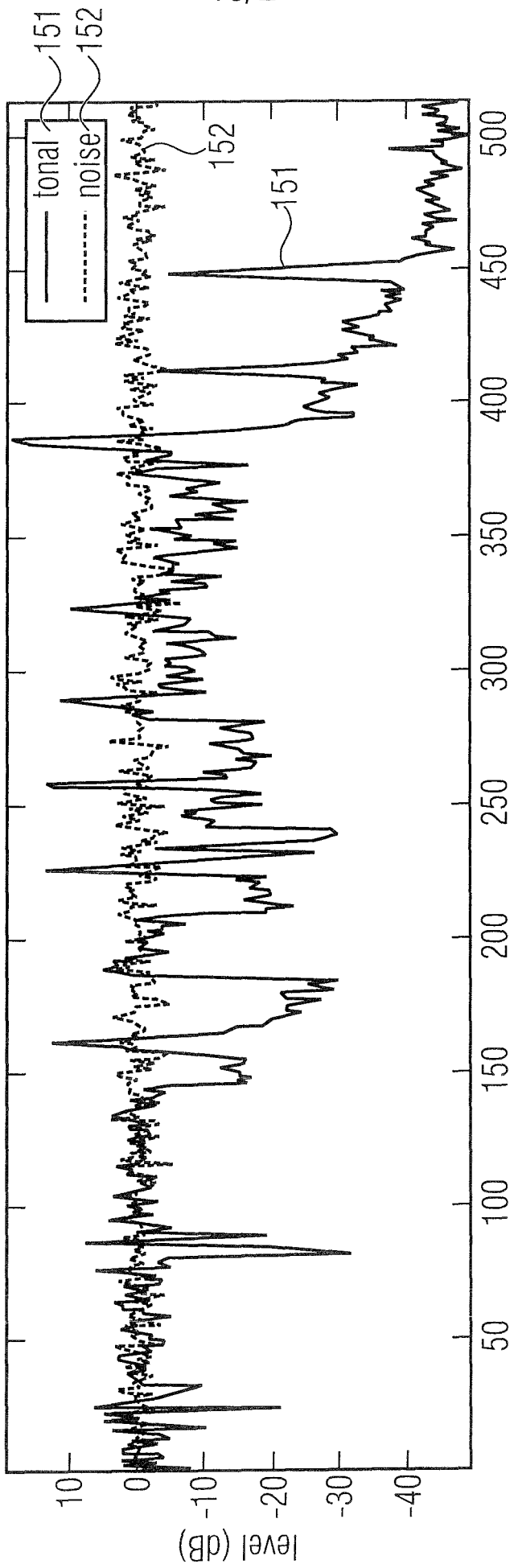
151
152
tonal
noise
152
151
level (dB)
10
0
-10
-20
-30
-40
50
100
150
200
250
300
350
400
450
500
frequency bin

FIGURE 16

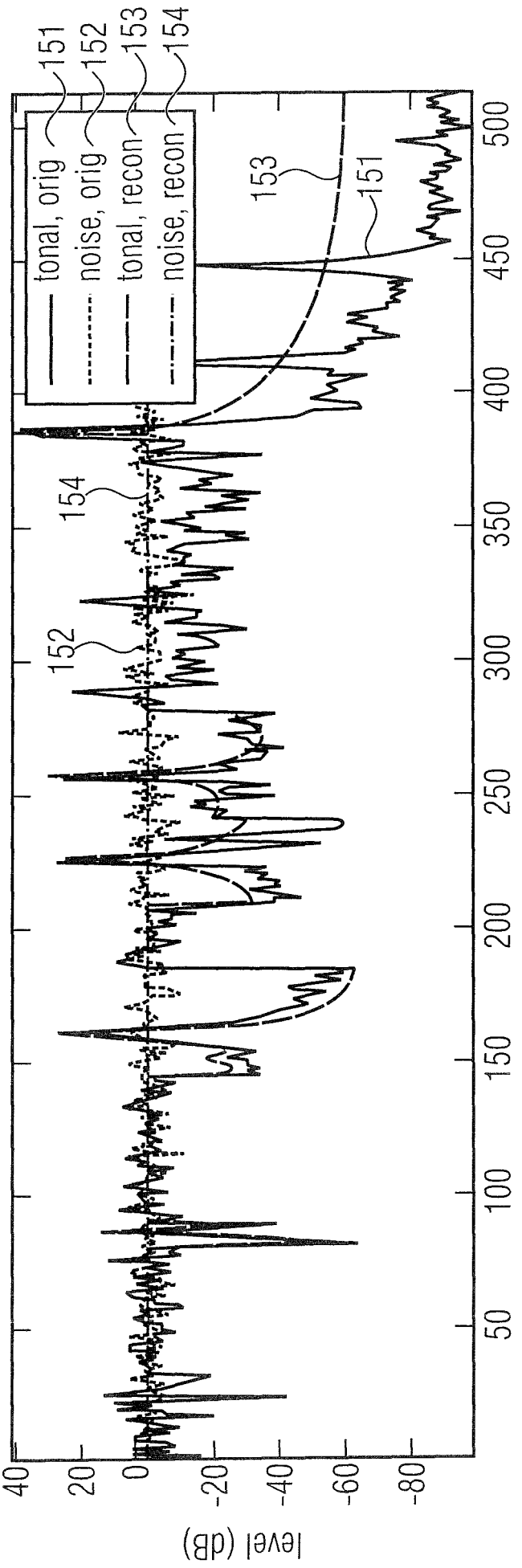
151
152
153
154
tonal, orig
noise, orig
tonal, recon
noise, recon
level (dB)
frequency bin
40
20
0
-20
-40
-60
-80
50
100
150
200
250
300
350
400
450
500

FIGURE 17

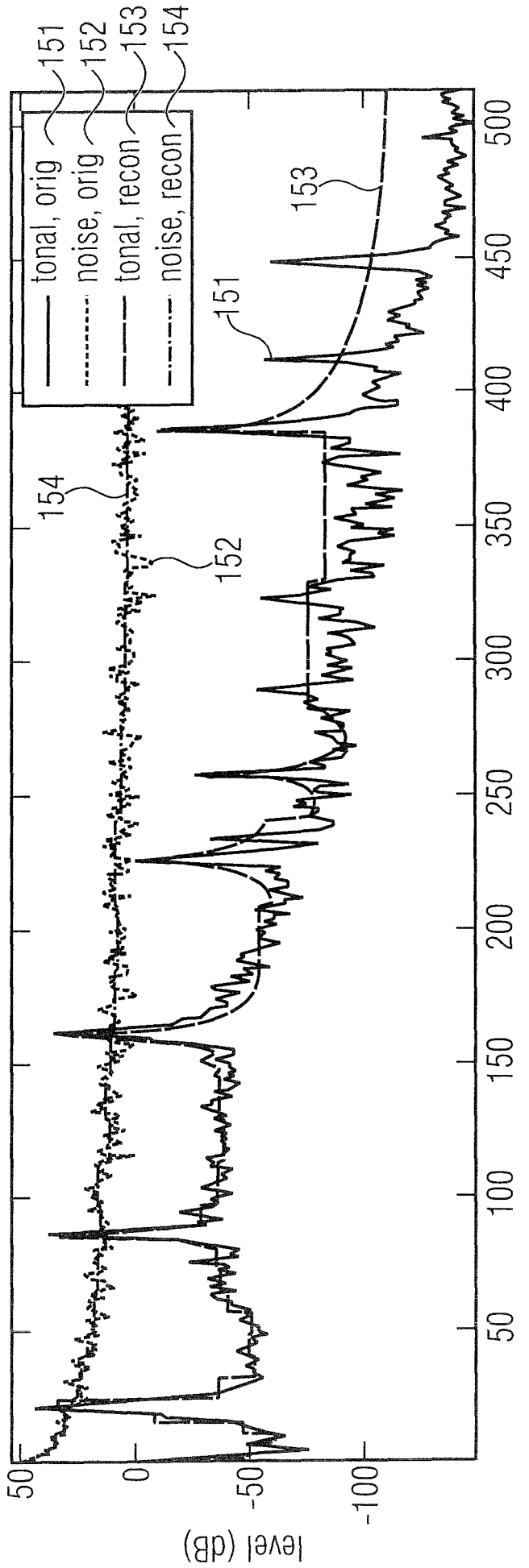
151
152
153
154
tonal, orig
noise, orig
tonal, recon
noise, recon
50
0
-50
-100
level (dB)
50
100
150
200
250
300
350
400
450
500
frequency bin

FIGURE 18