(12) INTERNATIONAL APPLICATION PUBLISHED UNDER THE PATENT COOPERATION TREATY (PCT)

CORRECTED VERSION

(19) World Intellectual Property Organization
International Bureau

(43) International Publication Date
21 February 2008 (21.02.2008)

PCT

(10) International Publication Number
WO 2008/021257 A8

(51) International Patent Classification:
C09D 5/10 (2006.01)

(21) International Application Number:
PCT/US2007/017824

(22) International Filing Date: 9 August 2007 (09.08.2007)

(25) Filing Language: English

(26) Publication Language: English

(30) Priority Data:
60/822,228 11 August 2006 (11.08.2006) US
11/731,075 30 March 2007 (30.03.2007) US

(71) Applicant *(for all designated States except US)*: **LAM RESEARCH CORPORATION** [US/US]; 4650 Cushing Parkway, Fremont, CA 94538 (US).

(71) Applicant *(for US only)*: **CHENG, Helen** (legal representative of the deceased inventor) [US/US]; 1665 Lachine Drive, Sunnyvale, CA 94087 (US).

(72) Inventor: **CHENG, Wing** (deceased).

(72) Inventors; and

(75) Inventors/Applicants *(for US only)*: **KHOLODENKO, Arnold** [US/US]; 1600 Ulloa Street, San Francisco, CA 94116 (US). **MANDELBOYM, Mark** [US/US]; 444 Saratoga Ave., Apt. 29B, Santa Clara, CA 95050 (US). **PENG, Grant** [US/US]; 32 Mission Cielo Ave., Fremont, CA 94539 (US). **MIKHAYLICHENKO, Katrina** [RU/US]; 1818 Fumia Place, San Jose, CA 95151 (US).

(74) Agent: **CHAN, Konrad, K.**; Martine Penilla & Gencarella, LLP, 710 Lakeway Drive, Suite 200, Sunnyvale, CA 94085 (US).

(81) Designated States *(unless otherwise indicated, for every kind of national protection available)*: AE, AG, AL, AM, AT, AU, AZ, BA, BB, BG, BH, BR, BW, BY, BZ, CA, CH, CN, CO, CR, CU, CZ, DE, DK, DM, DO, DZ, EC, EE, EG, ES, FI, GB, GD, GE, GH, GM, GT, HN, HR, HU, ID, IL, IN, IS, JP, KE, KG, KM, KN, KP, KR, KZ, LA, LC, LK, LR, LS, LT, LU, LY, MA, MD, ME, MG, MK, MN, MW, MX, MY, MZ, NA, NG, NI, NO, NZ, OM, PG, PH, PL, PT, RO, RS, RU, SC, SD, SE, SG, SK, SL, SM, SV, SY, TJ, TM, TN, TR, TT, TZ, UA, UG, US, UZ, VC, VN, ZA, ZM, ZW.

(84) Designated States *(unless otherwise indicated, for every kind of regional protection available)*: ARIPO (BW, GH,

[Continued on next page]

(54) Title: CHEMICAL RESISTANT SEMICONDUCTOR PROCESSING CHAMBER BODIES

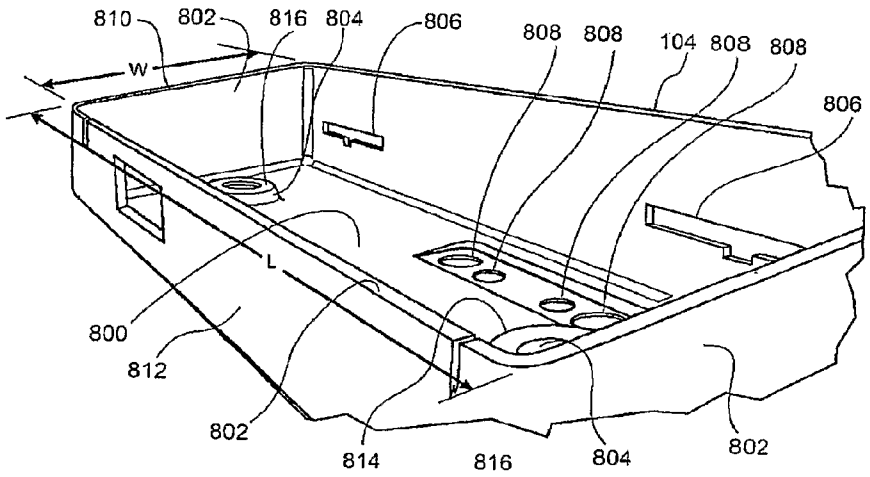

(57) Abstract: In one embodiment a chamber body enabling semiconductor processing equipment to be at least partially housed in the chamber body, the semiconductor processing equipment being configured to process a substrate using fluids is disclosed. The chamber body being comprised of a base material implemented to form the chamber body, the chamber body defined by at least a bottom surface and wall surfaces that are integrally connected to the bottom surface to enable capture of overflows of fluids during the processing of the substrate over the chamber body. Additionally, the base material is metallic. The chamber body also has a primer coat material disposed over and on the base material. The primer coat material has metallic constituents to define an integrated bond with the base material along with non- metallic constituents. The chamber body further includes a main coat material disposed over and on the primer coat material. The main coat material being defined from non-metallic constituents, the non-metallic constituents of the main coat material defining an integrated bond with the primer coat material. The main coat material defined to completely overlie all the metallic constituents of the primer coat.

WO 2008/021257 A8

GM, KE, LS, MW, MZ, NA, SD, SL, SZ, TZ, UG, ZM, ZW), Eurasian (AM, AZ, BY, KG, KZ, MD, RU, TJ, TM), European (AT, BE, BG, CH, CY, CZ, DE, DK, EE, ES, FI, FR, GB, GR, HU, IE, IS, IT, LT, LU, LV, MC, MT, NL, PL, PT, RO, SE, SI, SK, TR), OAPI (BF, BJ, CF, CG, CI, CM, GA, GN, GQ, GW, ML, MR, NE, SN, TD, TG).

Published:

— *with international search report*

(88) Date of publication of the international search report:
3 April 2008

(48) Date of publication of this corrected version:
30 July 2009

(15) Information about Correction:
see Notice of 30 July 2009