FIG. 1

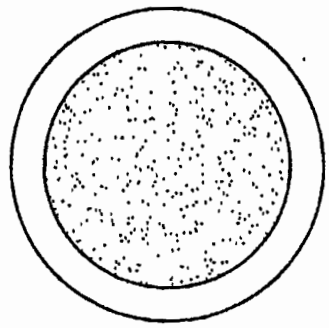

FIG. 2

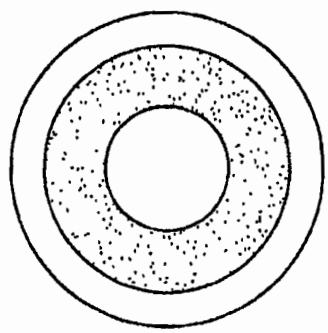

FIG. 3

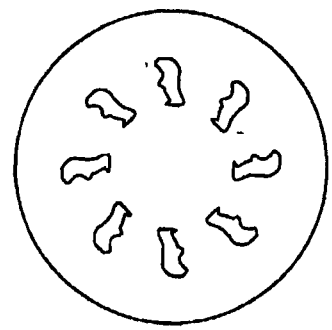

FIG. 4

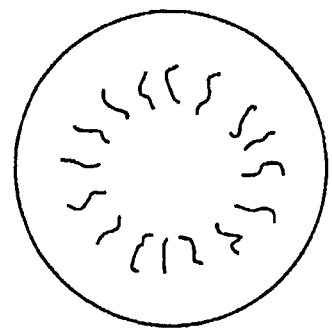

FIG. 5

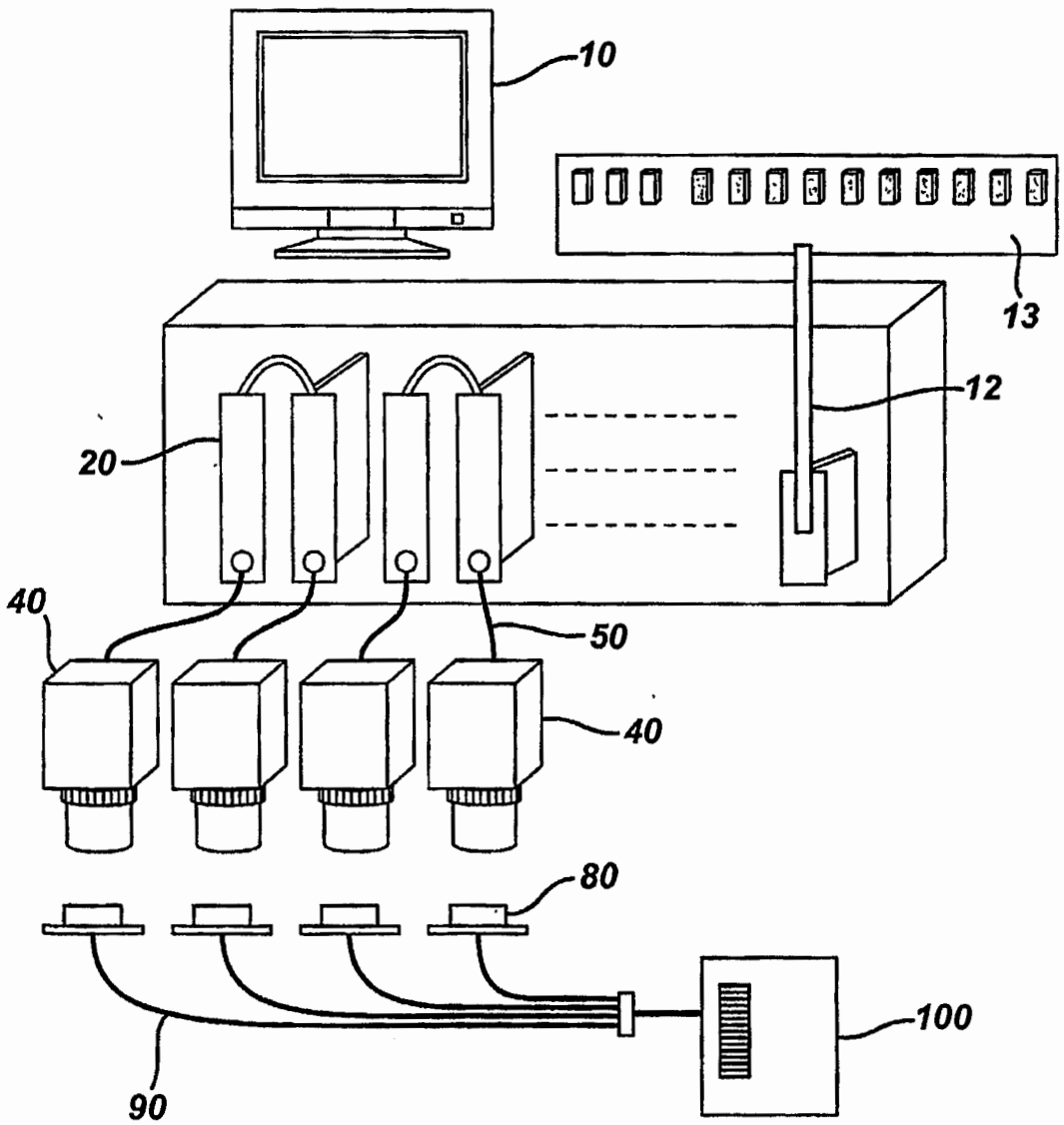

FIG. 6

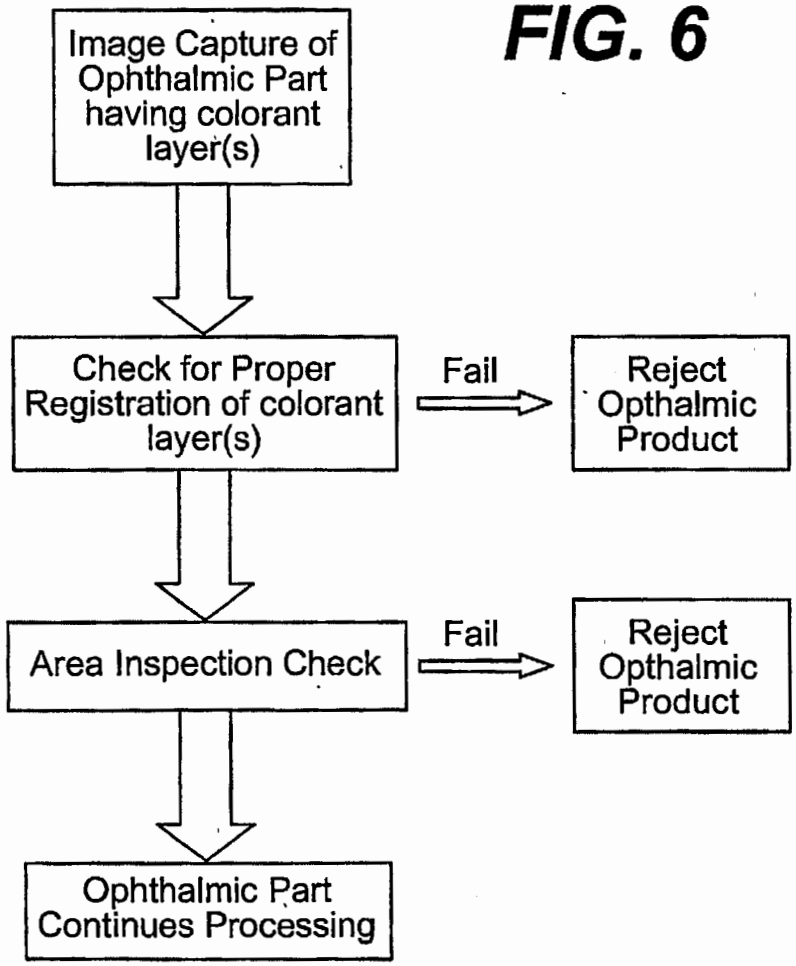
Image Capture of Ophthalmic Part having colorant layer(s)
Check for Proper Registration of colorant layer(s)
Fail
Reject Opthalmic Product
Area Inspection Check
Fail
Reject Opthalmic Product
Ophthalmic Part Continues Processing

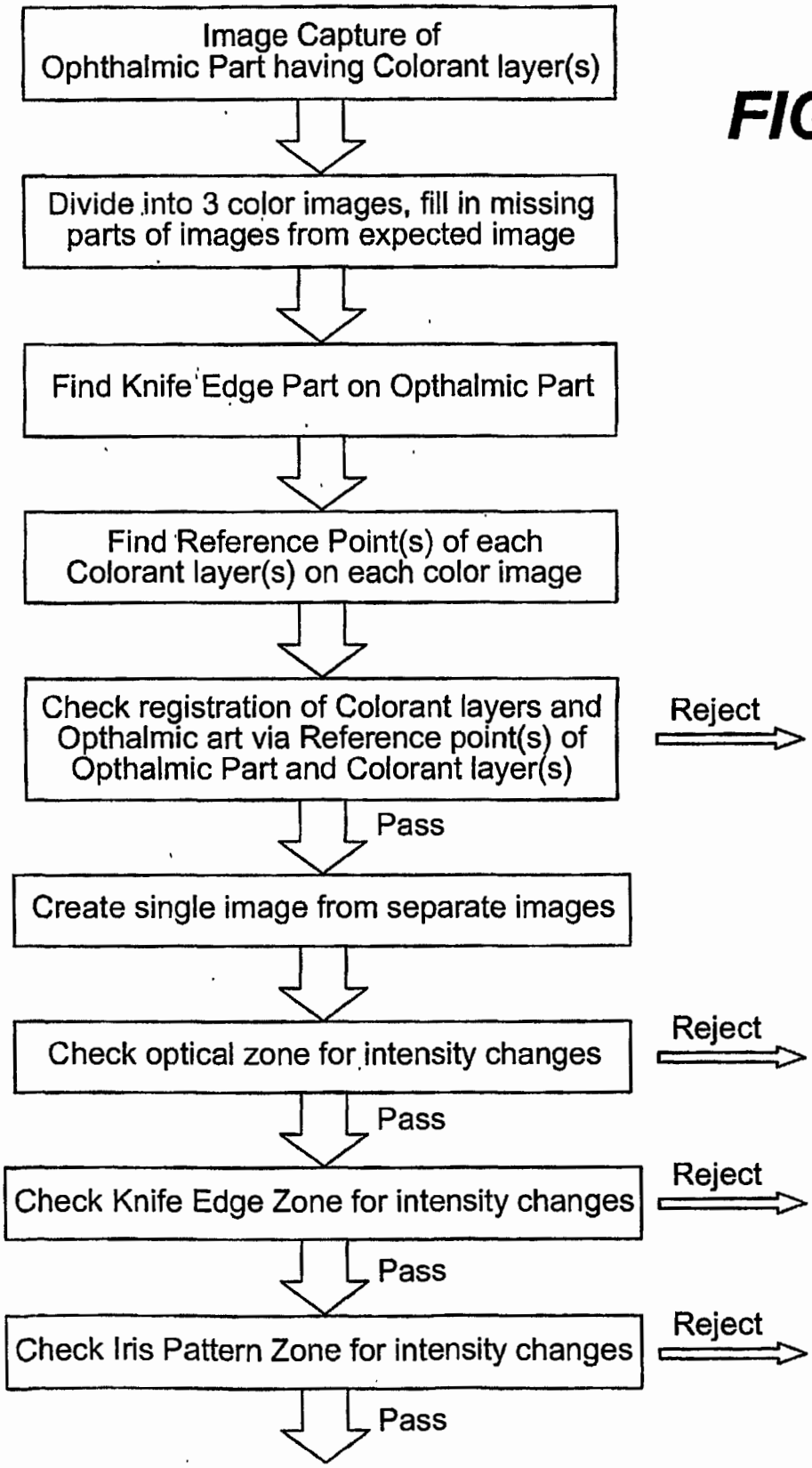
Image Capture of Ophthalmic Part having Colorant layer(s)
Divide into 3 color images, fill in missing parts of images from expected image
Find Knife Edge Part on Opthalmic Part
Find Reference Point(s) of each Colorant layer(s) on each color image
Check registration of Colorant layers and Opthalmic art via Reference point(s) of Opthalmic Part and Colorant layer(s)
Reject
Pass
Create single image from separate images
Check optical zone for intensity changes
Reject
Pass
Check Knife Edge Zone for intensity changes
Reject
Pass
Check Iris Pattern Zone for intensity changes
Reject
Pass

FIG. 7

FIG. 8

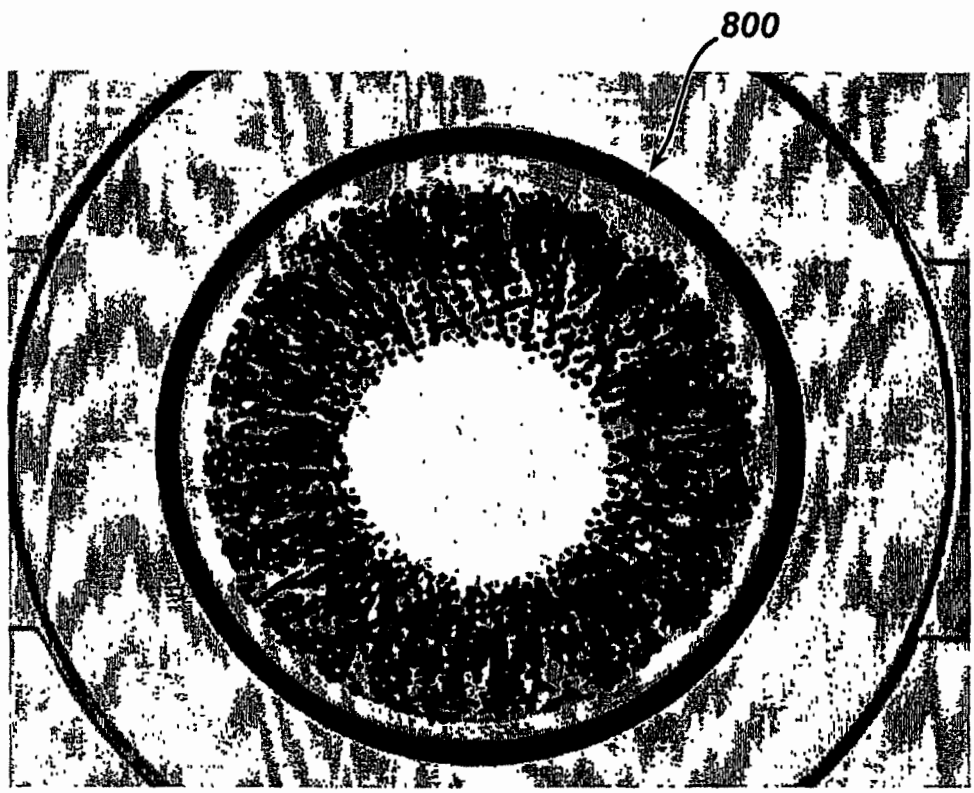

FIG. 9

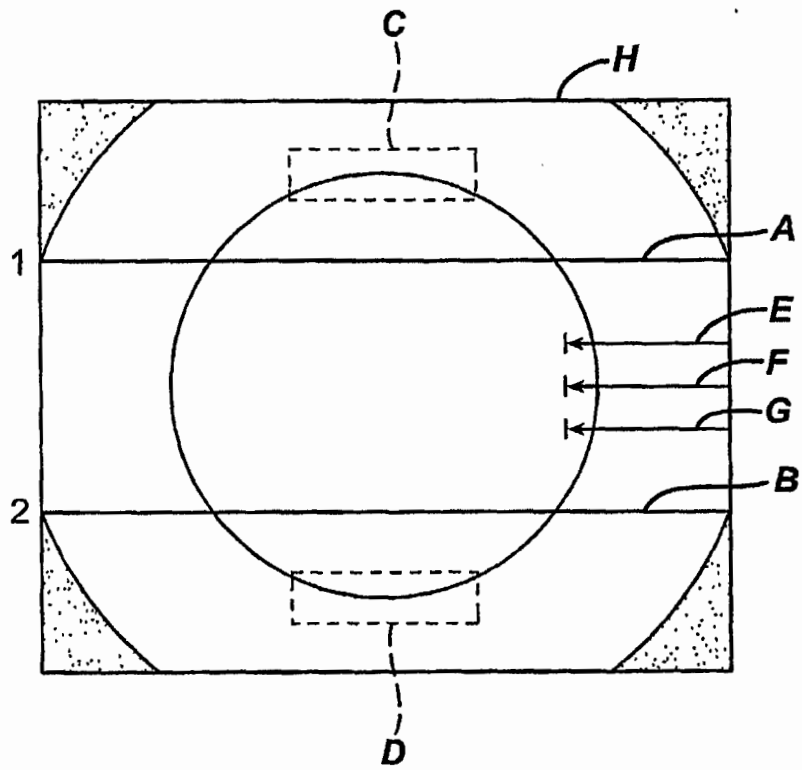

FIG. 10

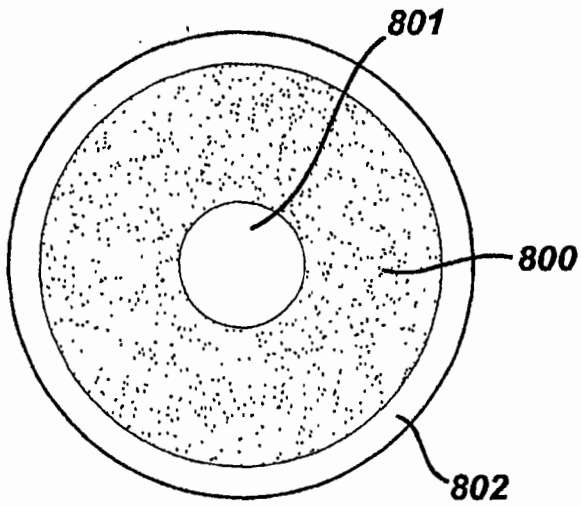

FIG. 11

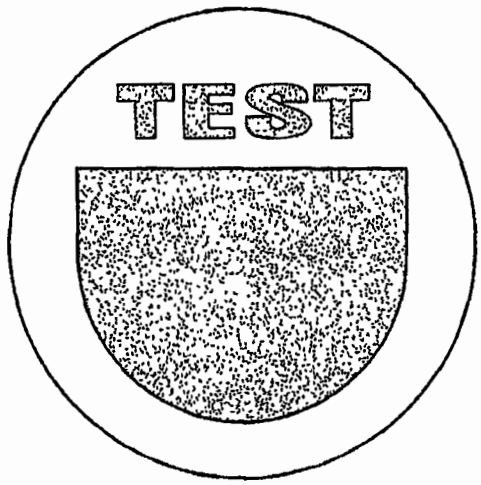

FIG. 12

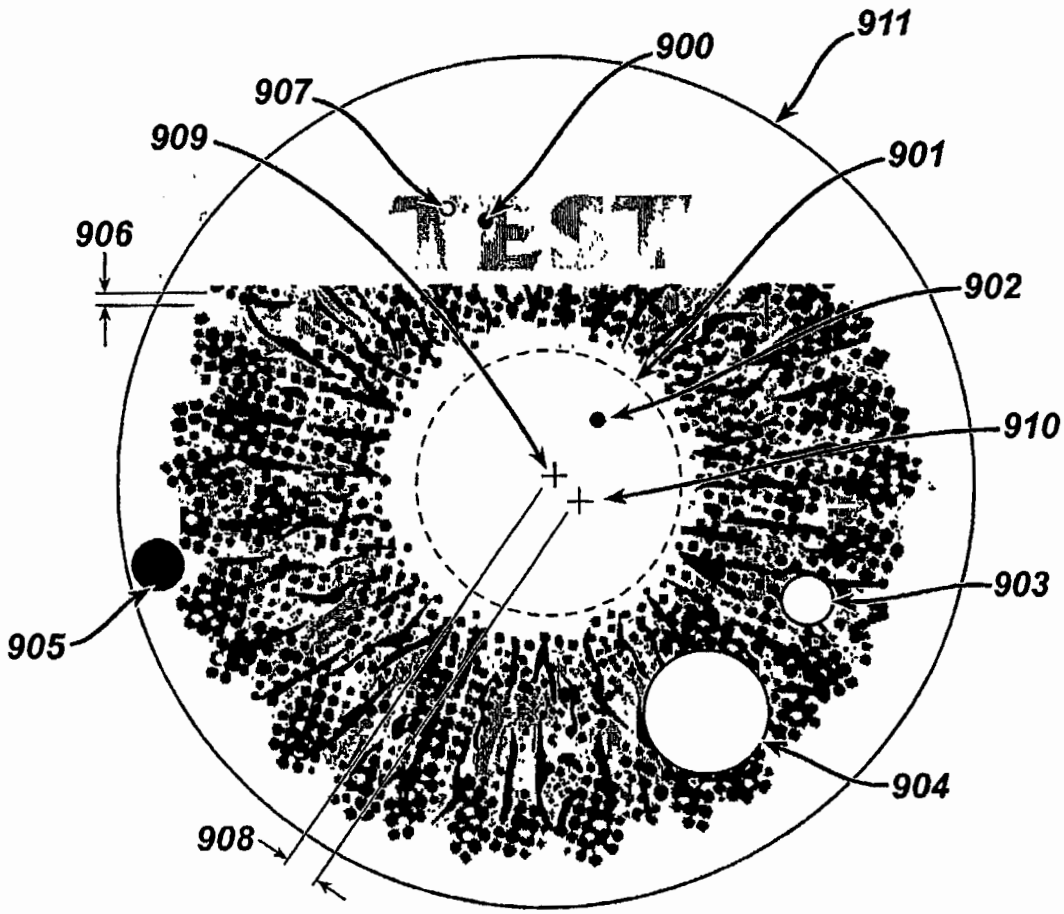

FIG. 13

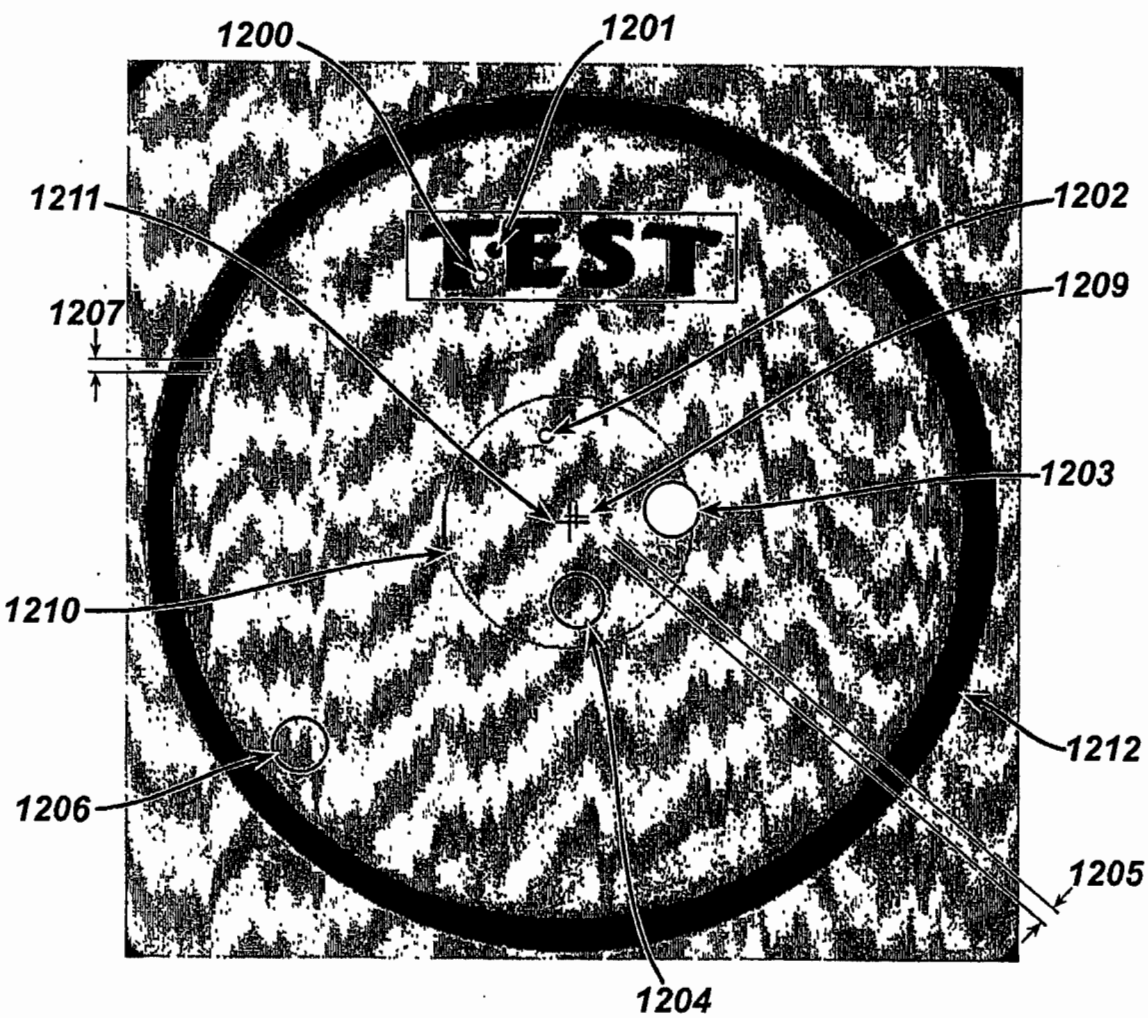
1200
1201
1211
1202
TEST
1209
1207
1203
1210
1212
1206
1205
1204