(12) INTERNATIONAL APPLICATION PUBLISHED UNDER THE PATENT COOPERATION TREATY (PCT)

(19) World Intellectual Property Organization
International Bureau

(43) International Publication Date
30 August 2007 (30.08.2007)

PCT

(10) International Publication Number
WO 2007/096861 A1

(51) International Patent Classification:
B23B 31/11 (2006.01) *B23D 77/00* (2006.01)

(21) International Application Number:
PCT/IL2007/000107

(22) International Filing Date: 28 January 2007 (28.01.2007)

(25) Filing Language: English

(26) Publication Language: English

(30) Priority Data:
173877 22 February 2006 (22.02.2006) IL

(71) Applicant *(for all designated States except US)*: **ISCAR LTD.** [IL/IL]; P.O. BOX 11, 24959 Tefen (IL).

(72) Inventors; and

(75) Inventors/Applicants *(for US only)*: **HECHT, Gil** [IL/IL]; P.O. Box 11, 24959 Tefen (IL). **ELIEZER, Oleg** [IL/IL]; P.O. Box 11, 24959 Tefen (IL). **COHEN, Tsur** [IL/IL]; P.O. Box 11, 24959 Tefen (IL).

(74) Agent: **ISCAR LTD., PATENT DEPARTMENT**; P.O. Box 11, 24959 Tefen (IL).

(81) Designated States *(unless otherwise indicated, for every kind of national protection available)*: AE, AG, AL, AM, AT, AU, AZ, BA, BB, BG, BR, BW, BY, BZ, CA, CH, CN, CO, CR, CU, CZ, DE, DK, DM, DZ, EC, EE, EG, ES, FI, GB, GD, GE, GH, GM, GT, HN, HR, HU, ID, IL, IN, IS, JP, KE, KG, KM, KN, KP, KR, KZ, LA, LC, LK, LR, LS, LT, LU, LV, LY, MA, MD, MG, MK, MN, MW, MX, MY, MZ, NA, NG, NI, NO, NZ, OM, PG, PH, PL, PT, RO, RS, RU, SC, SD, SE, SG, SK, SL, SM, SV, SY, TJ, TM, TN, TR, TT, TZ, UA, UG, US, UZ, VC, VN, ZA, ZM, ZW.

(84) Designated States *(unless otherwise indicated, for every kind of regional protection available)*: ARIPO (BW, GH, GM, KE, LS, MW, MZ, NA, SD, SL, SZ, TZ, UG, ZM, ZW), Eurasian (AM, AZ, BY, KG, KZ, MD, RU, TJ, TM), European (AT, BE, BG, CH, CY, CZ, DE, DK, EE, ES, FI, FR, GB, GR, HU, IE, IS, IT, LT, LU, LV, MC, NL, PL, PT, RO, SE, SI, SK, TR), OAPI (BF, BJ, CF, CG, CI, CM, GA, GN, GQ, GW, ML, MR, NE, SN, TD, TG).

Published:
— *with international search report*

[Continued on next page]

(54) **Title:** CUTTING TOOL

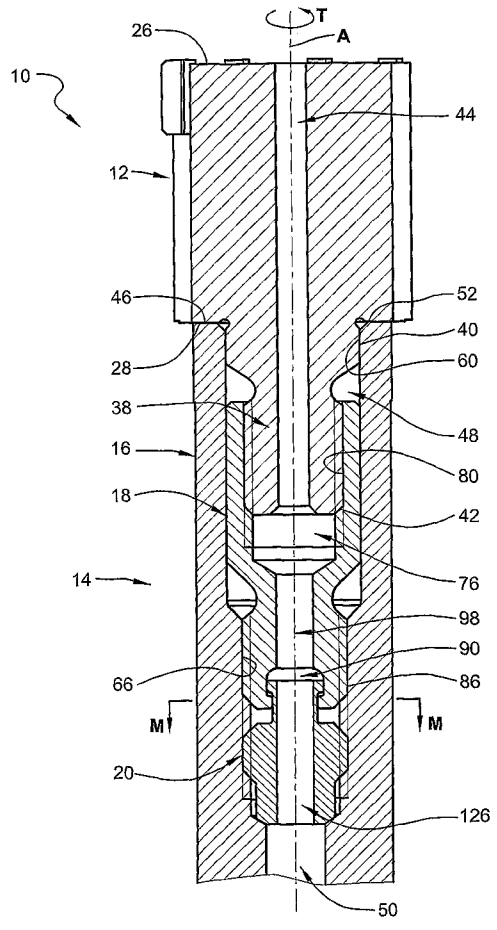

(57) **Abstract:** A cutting tool (10) has a cutting head (12) which is detachably retained in an adaptor (18) of a tool holder (14) . Upon replacement of the cutting head (12) the adaptor (18) remains fixed in the tool holder.

WO 2007/096861 A1

— *before the expiration of the time limit for amending the claims and to be republished in the event of receipt of amendments*

For two-letter codes and other abbreviations, refer to the "Guidance Notes on Codes and Abbreviations" appearing at the beginning of each regular issue of the PCT Gazette.