(12) INTERNATIONAL APPLICATION PUBLISHED UNDER THE PATENT COOPERATION TREATY (PCT)

(19) World Intellectual Property Organization
International Bureau

(43) International Publication Date
13 April 2006 (13.04.2006)

PCT

(10) International Publication Number
WO 2006/037636 A3

(51) International Patent Classification:
A61M 15/00 (2006.01) *A61M 11/02* (2006.01)

(21) International Application Number:
PCT/EP2005/010768

(22) International Filing Date: 6 October 2005 (06.10.2005)

(25) Filing Language: English

(26) Publication Language: English

(30) Priority Data:

0422106.5	6 October 2004 (06.10.2004)	GB
0425289.6	17 November 2004 (17.11.2004)	GB
0427552.5	15 December 2004 (15.12.2004)	GB
0509108.7	4 May 2005 (04.05.2005)	GB

(71) Applicant *(for all designated States except US)*: **BOEHRINGER INGELHEIM MICROPARTS GMBH** [DE/DE]; Hauert 7, 44227 Dortmund (DE).

(72) Inventors; and

(75) Inventors/Applicants *(for US only)*: **DUNNE, Stephen, Terence** [GB/GB]; The Cottage, Gt. Finborough, Stowmarket, Suffolk IP14 3AE (GB). **ROHRSCHNEIDER, Marc** [DE/DE]; An der Egge 3, 58093 Hagen (DE).

(74) Agent: **GESTHUYSEN, VON ROHR & EGGERT**; Huyssenallee 100, 45128 Essen (DE).

(81) Designated States *(unless otherwise indicated, for every kind of national protection available)*: AE, AG, AL, AM, AT, AU, AZ, BA, BB, BG, BR, BW, BY, BZ, CA, CH, CN, CO, CR, CU, CZ, DE, DK, DM, DZ, EC, EE, EG, ES, FI, GB, GD, GE, GH, GM, HR, HU, ID, IL, IN, IS, JP, KE, KG, KM, KP, KR, KZ, LC, LK, LR, LS, LT, LU, LV, LY, MA, MD, MG, MK, MN, MW, MX, MZ, NA, NG, NI, NO, NZ, OM, PG, PH, PL, PT, RO, RU, SC, SD, SE, SG, SK, SL, SM, SY, TJ, TM, TN, TR, TT, TZ, UA, UG, US, UZ, VC, VN, YU, ZA, ZM, ZW.

(84) Designated States *(unless otherwise indicated, for every kind of regional protection available)*: ARIPO (BW, GH, GM, KE, LS, MW, MZ, NA, SD, SL, SZ, TZ, UG, ZM, ZW), Eurasian (AM, AZ, BY, KG, KZ, MD, RU, TJ, TM), European (AT, BE, BG, CH, CY, CZ, DE, DK, EE, ES, FI, FR, GB, GR, HU, IE, IS, IT, LT, LU, LV, MC, NL, PL, PT, RO, SE, SI, SK, TR), OAPI (BF, BJ, CF, CG, CI, CM, GA, GN, GQ, GW, ML, MR, NE, SN, TD, TG).

Published:
— *with international search report*

(88) Date of publication of the international search report:
20 July 2006

For two-letter codes and other abbreviations, refer to the "Guidance Notes on Codes and Abbreviations" appearing at the beginning of each regular issue of the PCT Gazette.

(54) Title: DISPENSING DEVICE, STORAGE DEVICE AND METHOD FOR DISPENSING POWDER

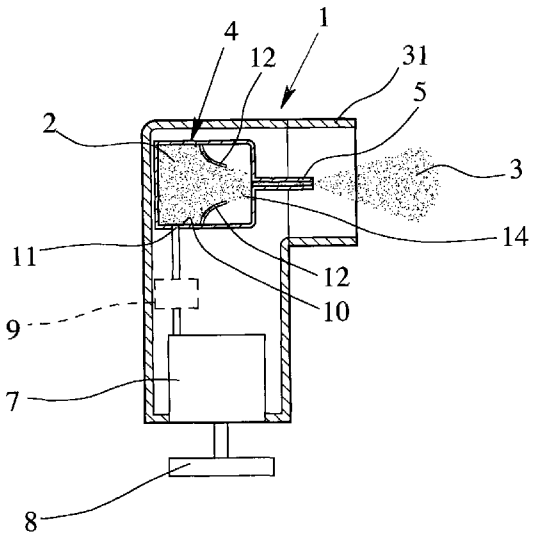

(57) Abstract: A dispensing device (1), a storage device (4) and a method for dispensing powder (2) are proposed. The powder is dispensed through a duct (5) with a flat cross section to deagglomerate the powder and to generate a spray (3) with fine particle size. A storage chamber (10) for the powder may be closed by a bursting element (12), wherein pressurized gas can burst the bursting element for discharging the powder. Preferably, the cross section of a gas supply to the storage chamber controls the gas flow during dispensing of the powder. In particular, the storage device comprises multiple storage chambers and associated ducts or nozzles, so that each dose of powder can be dispensed through a separate duct or nozzle. The powder may be forced through the duct by a gas pressure of less than 300 kPa to de-agglomerate the powder and/or to generate the spray. Preferably, the gas pressure reaches or exceeds a peak value before the bursting element bursts and, then, the powder is dispensed by a lower gas pressure.

WO 2006/037636 A3