FIG. 1

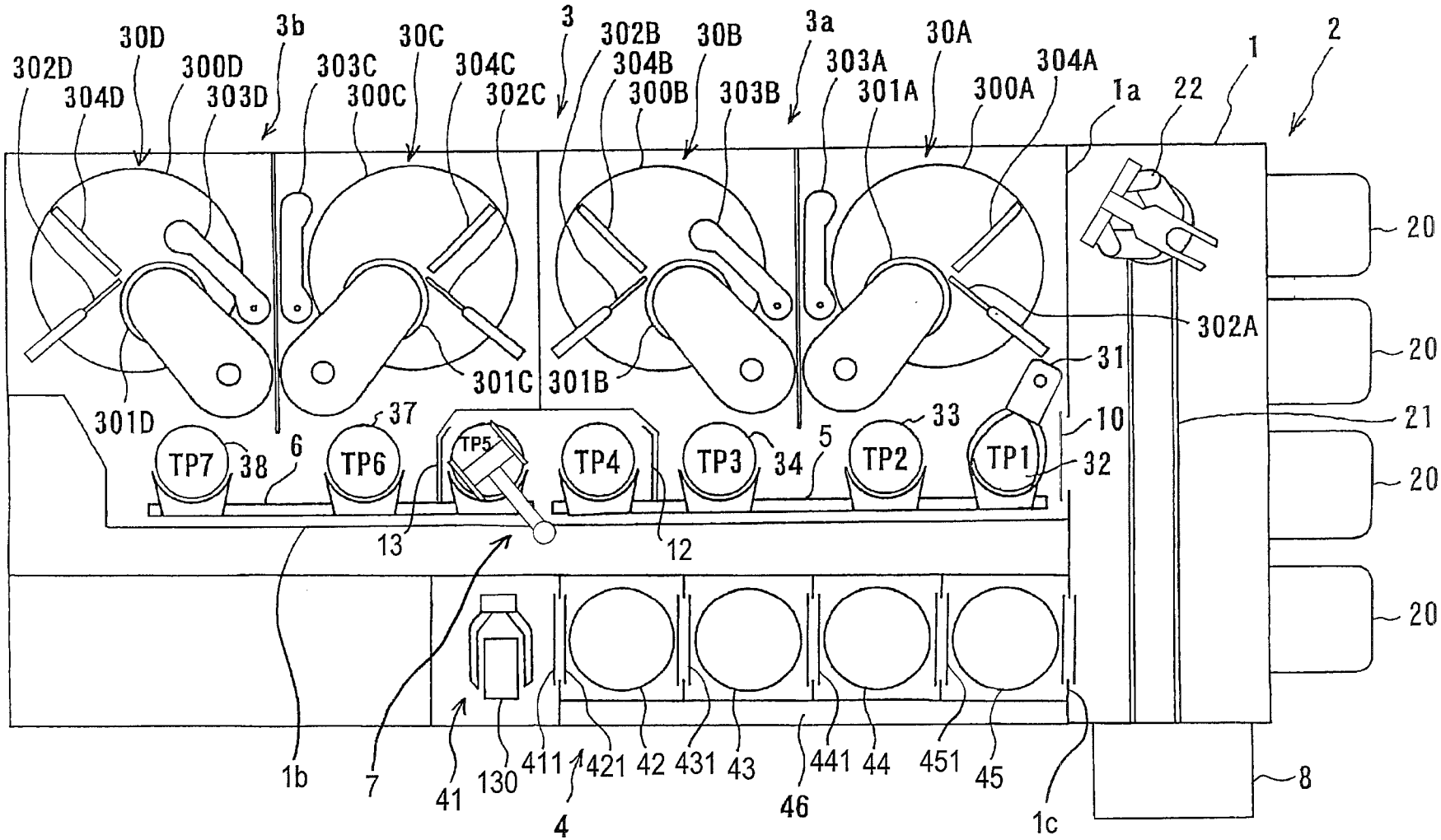
302D
304D
30D
300D
303D
3b
303C
300C
30C
304C
302C
3
302B
304B
300B
30B
303B
3a
303A
301A
30A
300A
304A
1a
22
1
2
20
20
20
20
302A
301D
301C
301B
31
10
21
32
TP7
38
6
37
TP6
TP5
TP4
TP3
34
5
33
TP2
TP1
13
12
1b
7
41
130
411
421
4
42
431
43
46
441
44
451
45
1c
8

FIG. 2

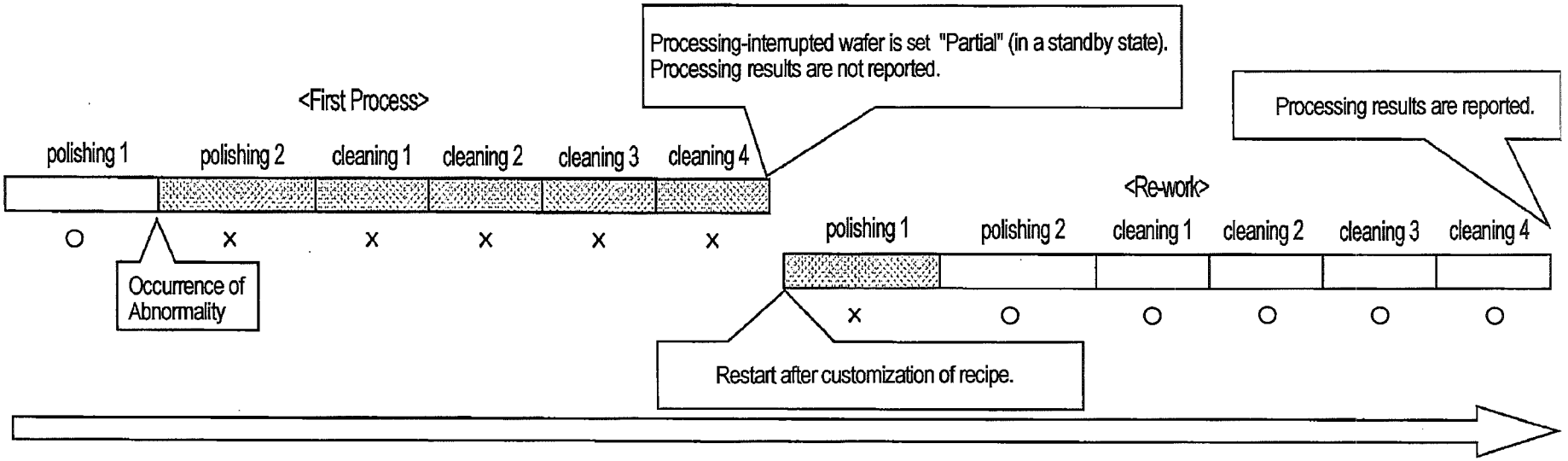
Processing-interrupted wafer is set "Partial" (in a standby state).
Processing results are not reported.
Processing results are reported.
<First Process>
polishing 1
polishing 2
cleaning 1
cleaning 2
cleaning 3
cleaning 4
O
X
X
X
X
X
Occurrence of Abnormality
<Re-work>
polishing 1
polishing 2
cleaning 1
cleaning 2
cleaning 3
cleaning 4
X
O
O
O
O
O
Restart after customization of recipe.

FIG. 3

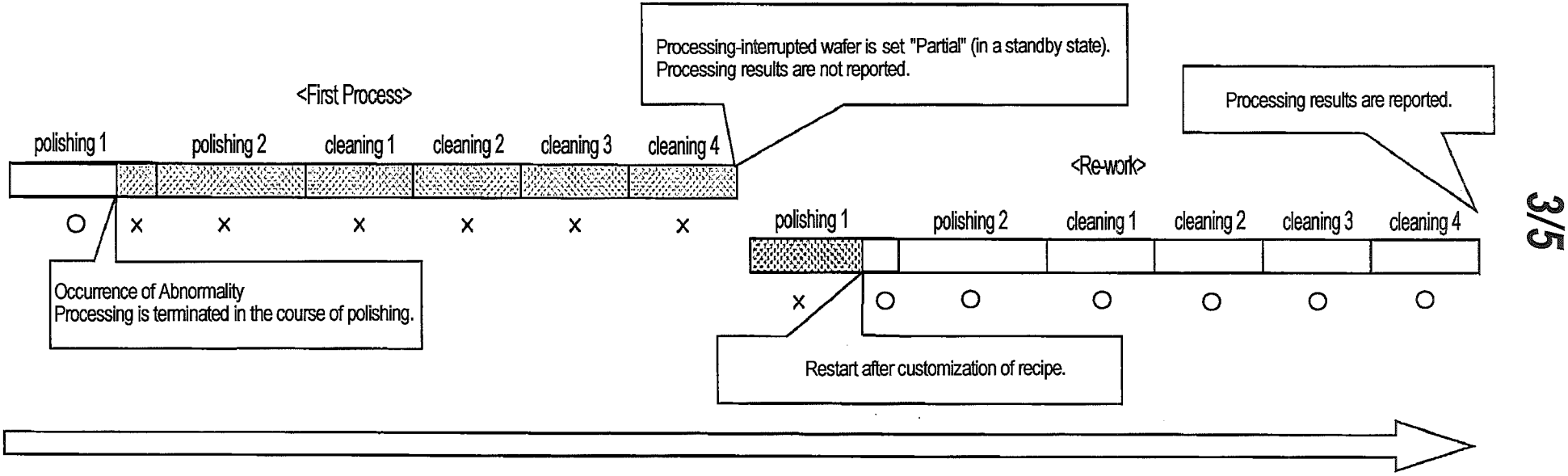
Processing-interrupted wafer is set "Partial" (in a standby state).
Processing results are not reported.
Processing results are reported.
<First Process>
polishing 1
polishing 2
cleaning 1
cleaning 2
cleaning 3
cleaning 4
<Re-work>
polishing 1
polishing 2
cleaning 1
cleaning 2
cleaning 3
cleaning 4
O X X X X X X
X O O O O O O
Occurrence of Abnormality
Processing is terminated in the course of polishing.
Restart after customization of recipe.

FIG. 4A

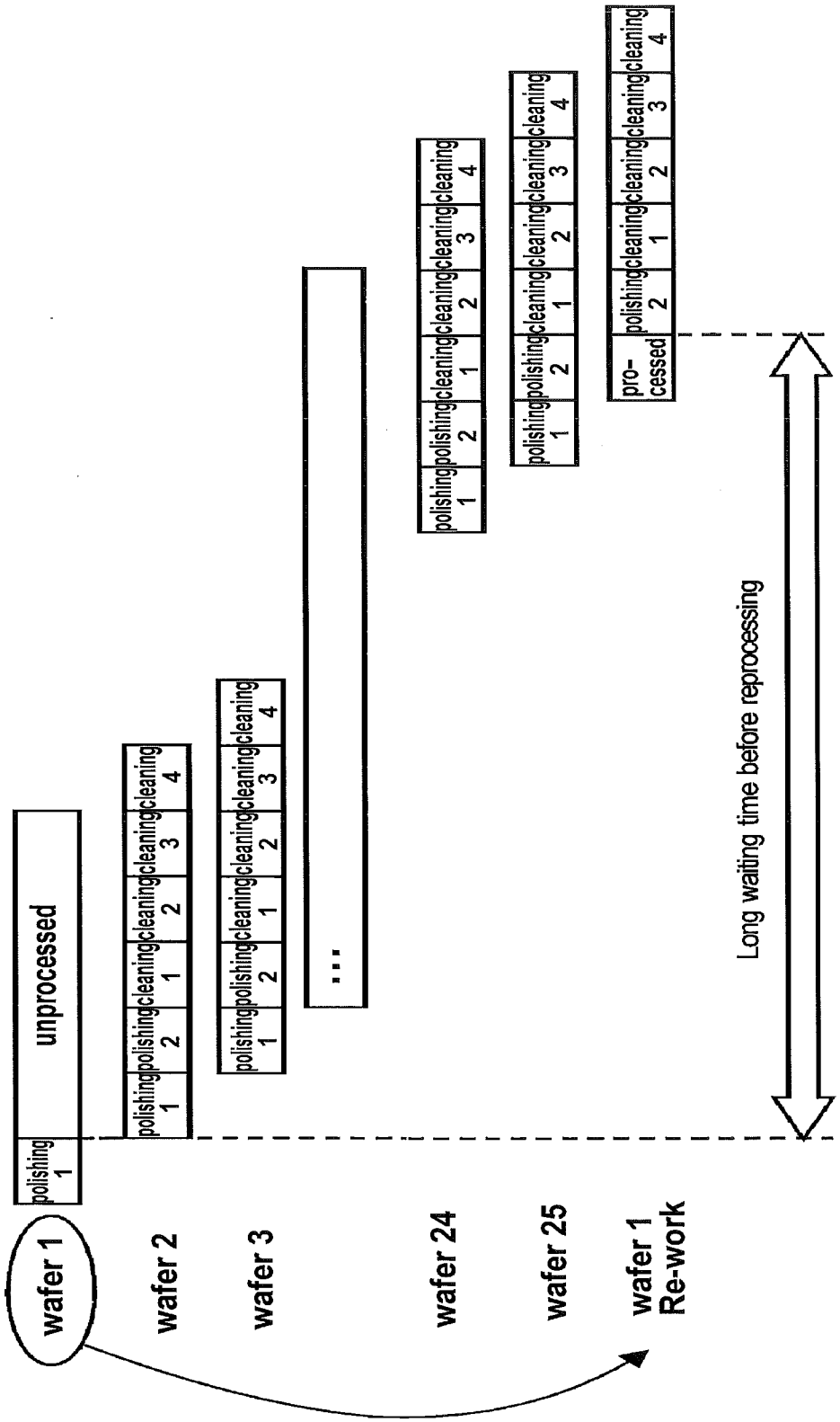
wafer 1
polishing 1
unprocessed
wafer 2
polishing 1
polishing 2
cleaning 1
cleaning 2
cleaning 3
cleaning 4
wafer 3
polishing 1
polishing 2
cleaning 1
cleaning 2
cleaning 3
cleaning 4
...
wafer 24
polishing 1
polishing 2
cleaning 1
cleaning 2
cleaning 3
cleaning 4
wafer 25
polishing 1
polishing 2
cleaning 1
cleaning 2
cleaning 3
cleaning 4
wafer 1
Re-work
pro-cessed
polishing 2
cleaning 1
cleaning 2
cleaning 3
cleaning 4
Long waiting time before reprocessing

FIG. 4B

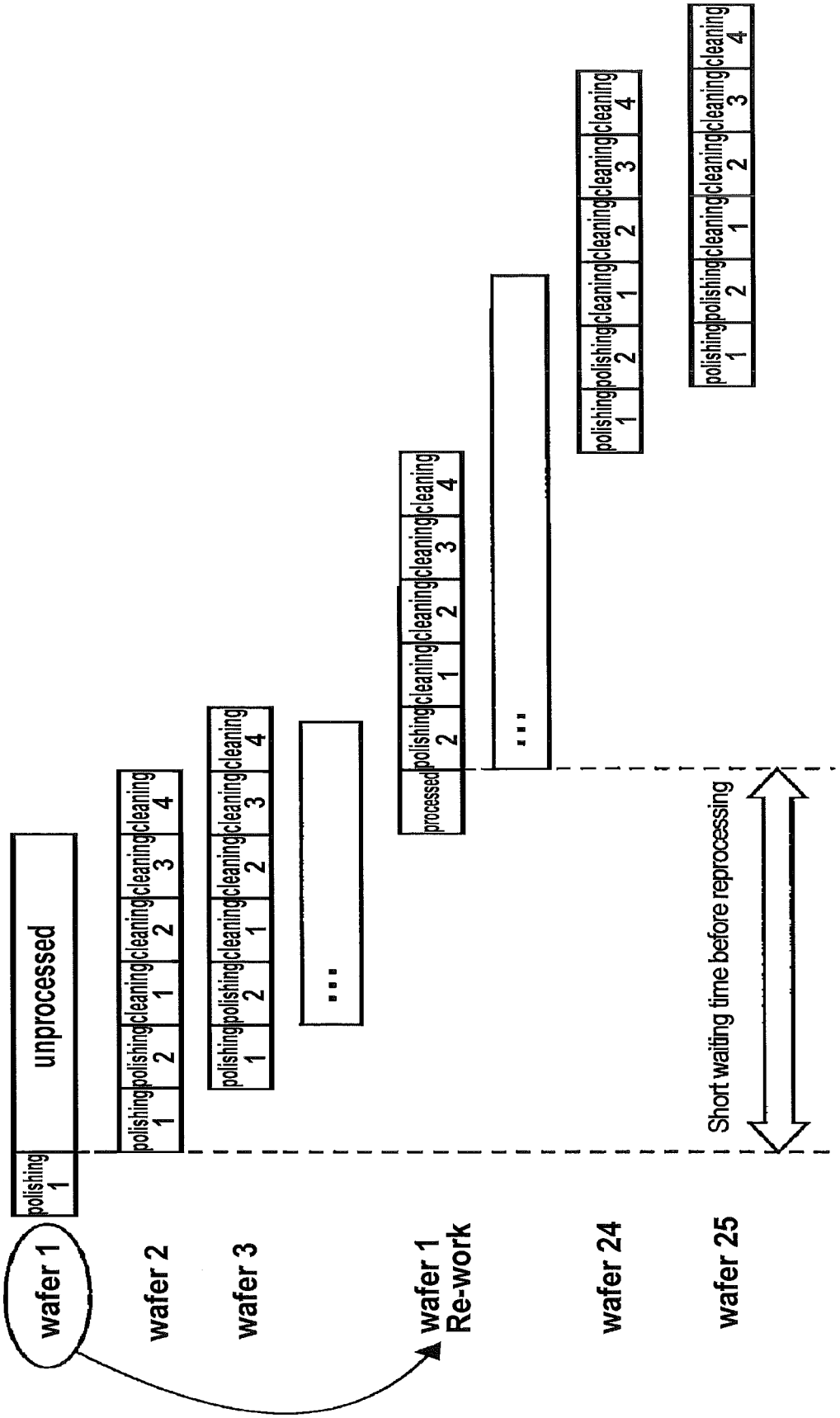
wafer 1
polishing 1
unprocessed
wafer 2
polishing 1
polishing 2
cleaning 1
cleaning 2
cleaning 3
cleaning 4
wafer 3
polishing 1
polishing 2
cleaning 1
cleaning 2
cleaning 3
cleaning 4
...
wafer 1 Re-work
processed
polishing 2
cleaning 1
cleaning 2
cleaning 3
cleaning 4
...
wafer 24
polishing 1
polishing 2
cleaning 1
cleaning 2
cleaning 3
cleaning 4
wafer 25
polishing 1
polishing 2
cleaning 1
cleaning 2
cleaning 3
cleaning 4
Short waiting time before reprocessing