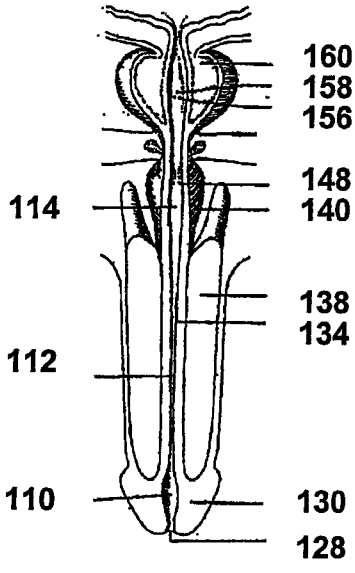
160
158
156
148
114
140
138
134
112
110
130
128

Fig. 1

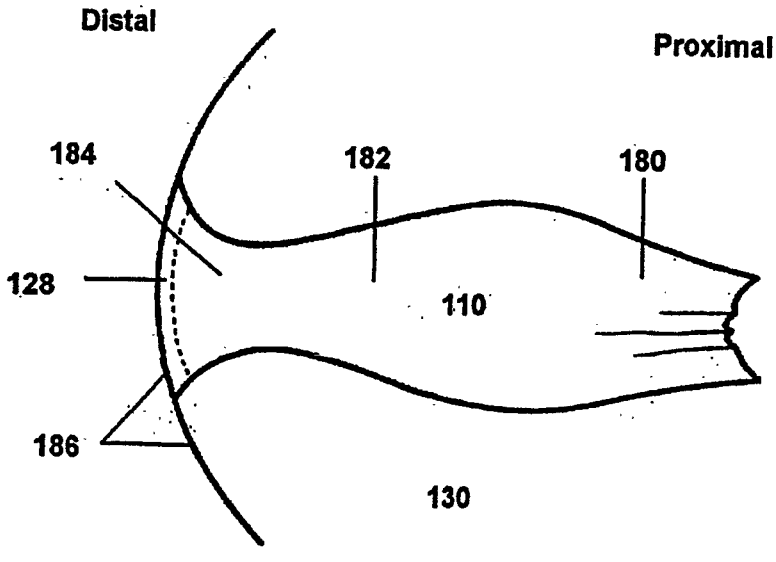
Distal
Proximal
184
182
180
128
110
186
130

Fig. 2

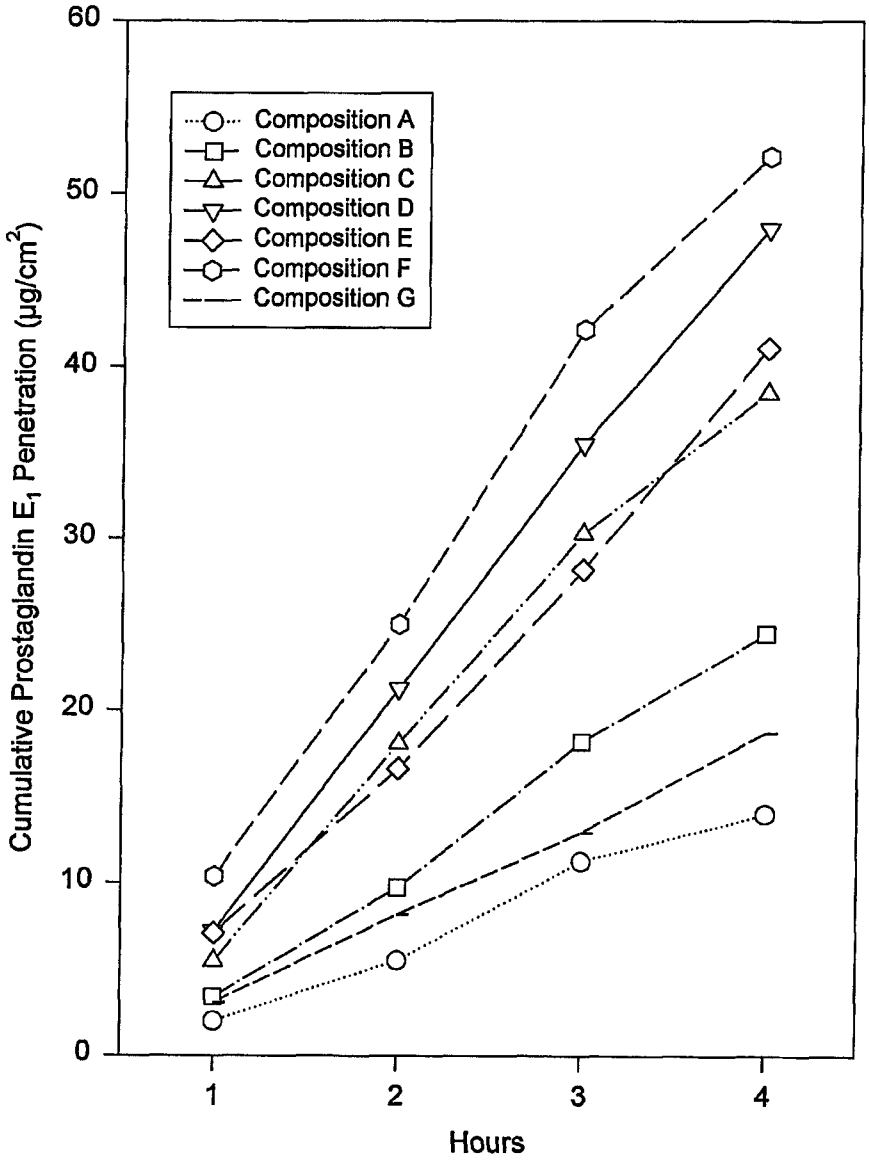
Composition A
Composition B
Composition C
Composition D
Composition E
Composition F
Composition G
Cumulative Prostaglandin E_1 Penetration ($\mu g/cm^2$)
0
10
20
30
40
50
60
1
2
3
4
Hours

Fig. 3

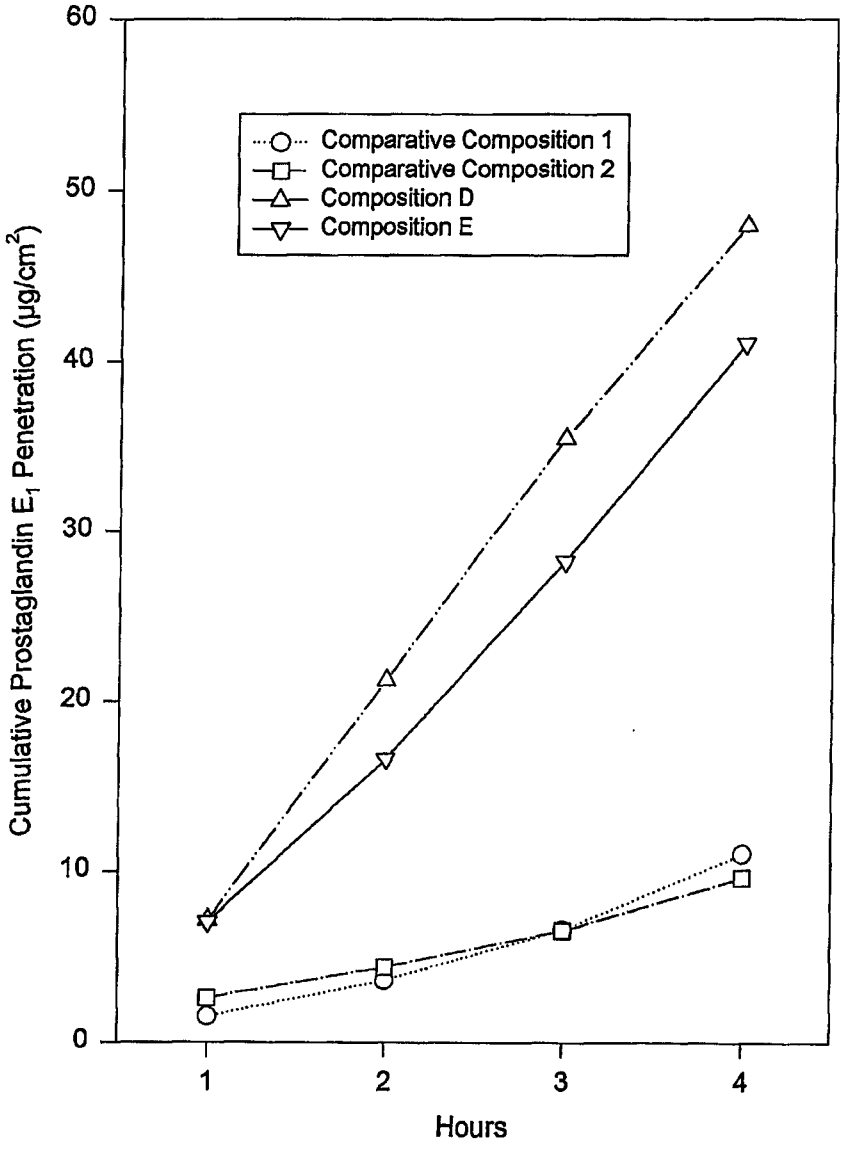
Comparative Composition 1
Comparative Composition 2
Composition D
Composition E
Cumulative Prostaglandin E_1 Penetration ($\mu g/cm^2$)
60
50
40
30
20
10
0
1
2
3
4
Hours

Fig. 4