FIG.1

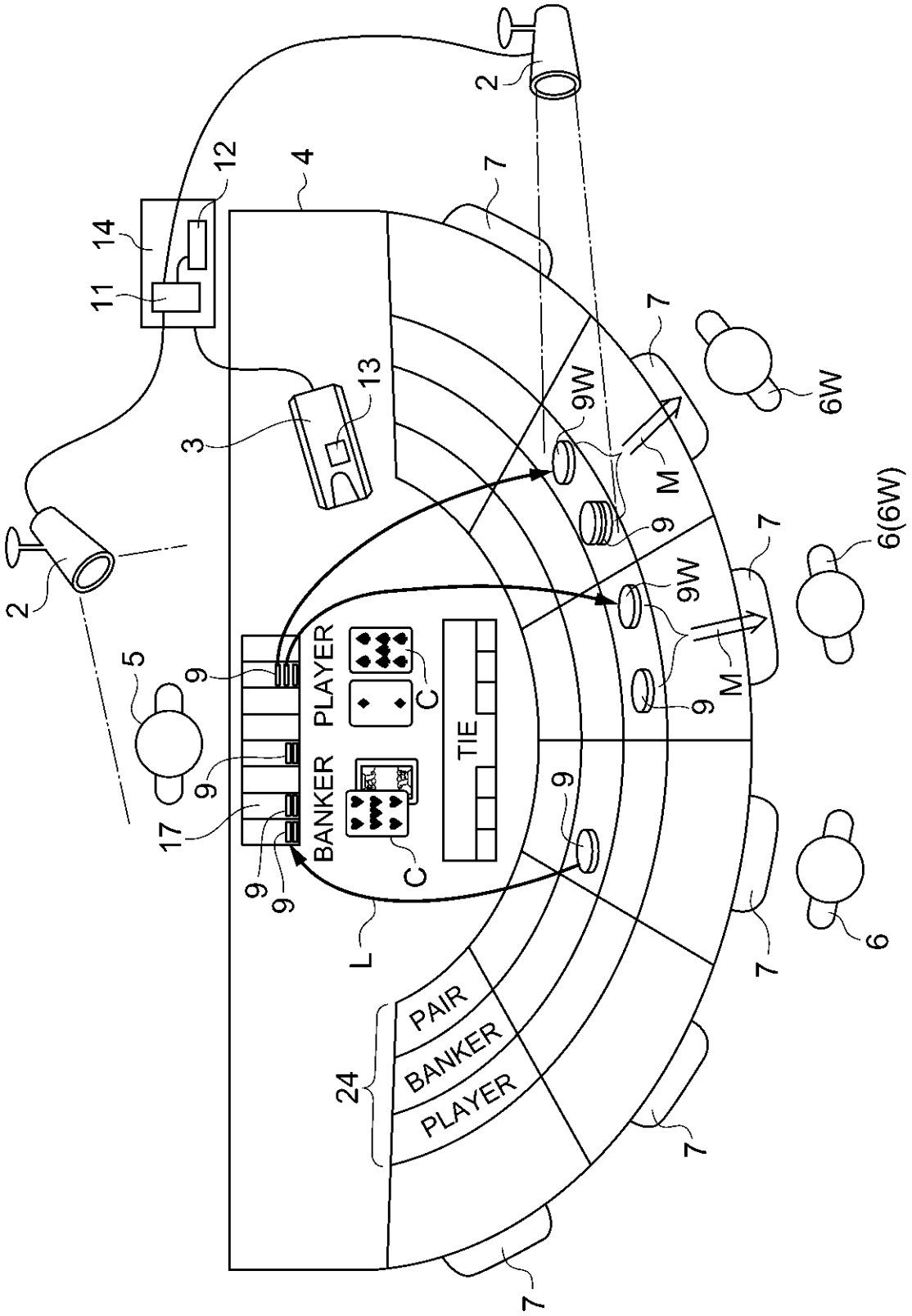
2
2
3
4
5
6
6(6W)
6W
7
9
9W
11
12
13
14
17
24
L
M
C
BANKER
PLAYER
TIE
PAIR
BANKER
PLAYER

FIG.2A

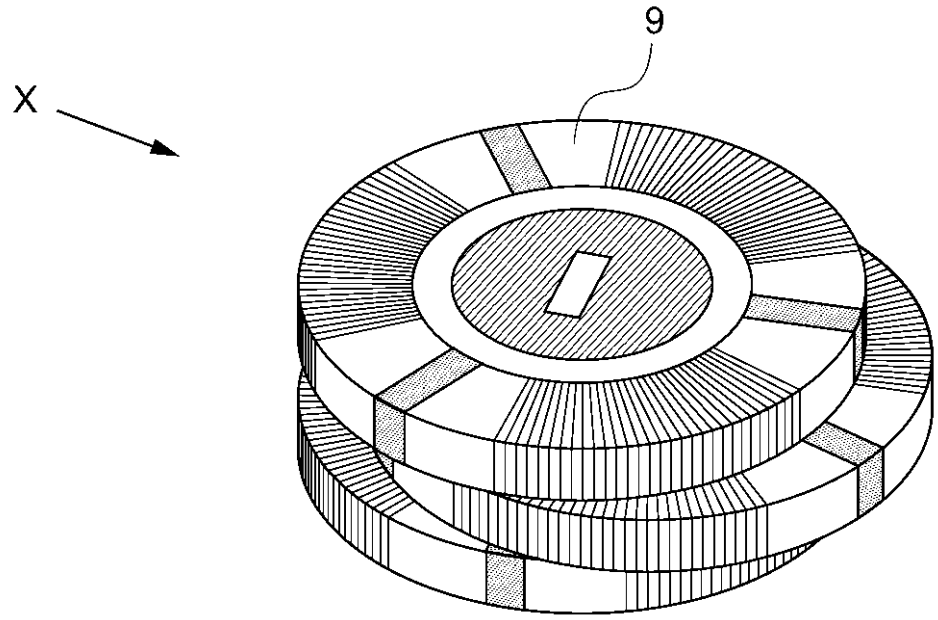

FIG.2B

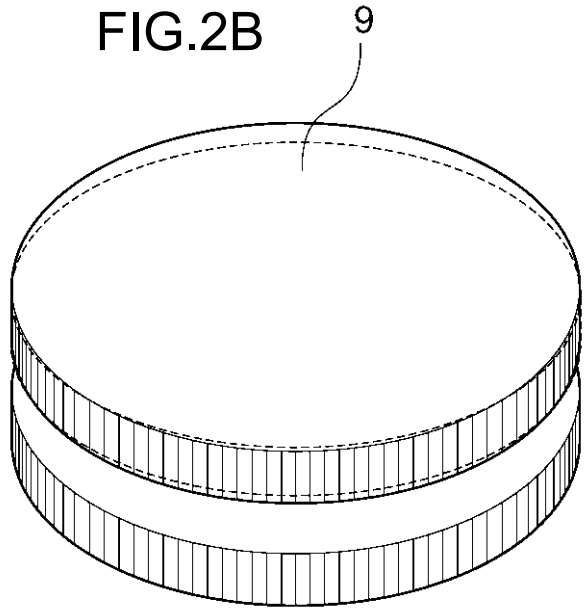

FIG.3



FIG.4

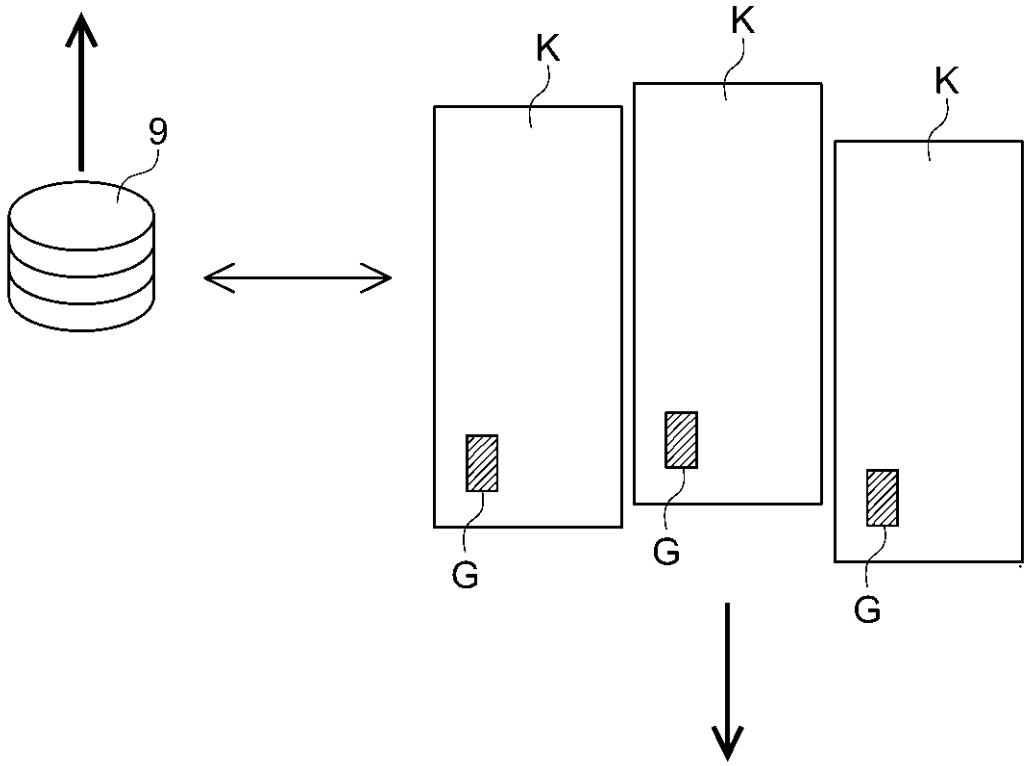

FIG.5

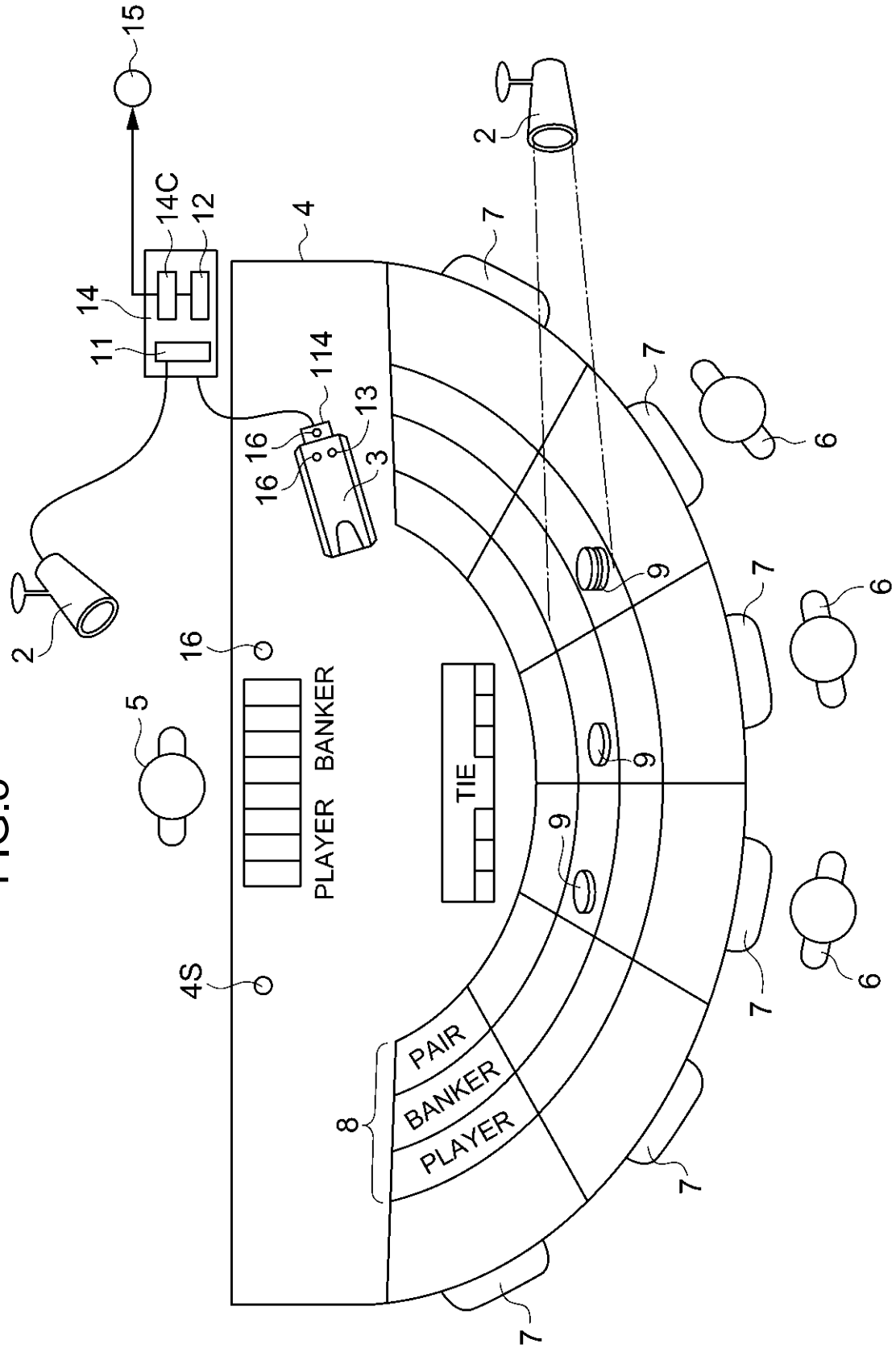
15
14C
12
14
11
114
13
16
16
3
4
2
2
7
7
7
6
6
6
9
9
9
16
5
4S
PLAYER
BANKER
TIE
8
PAIR
BANKER
PLAYER
7
7
7

FIG.6

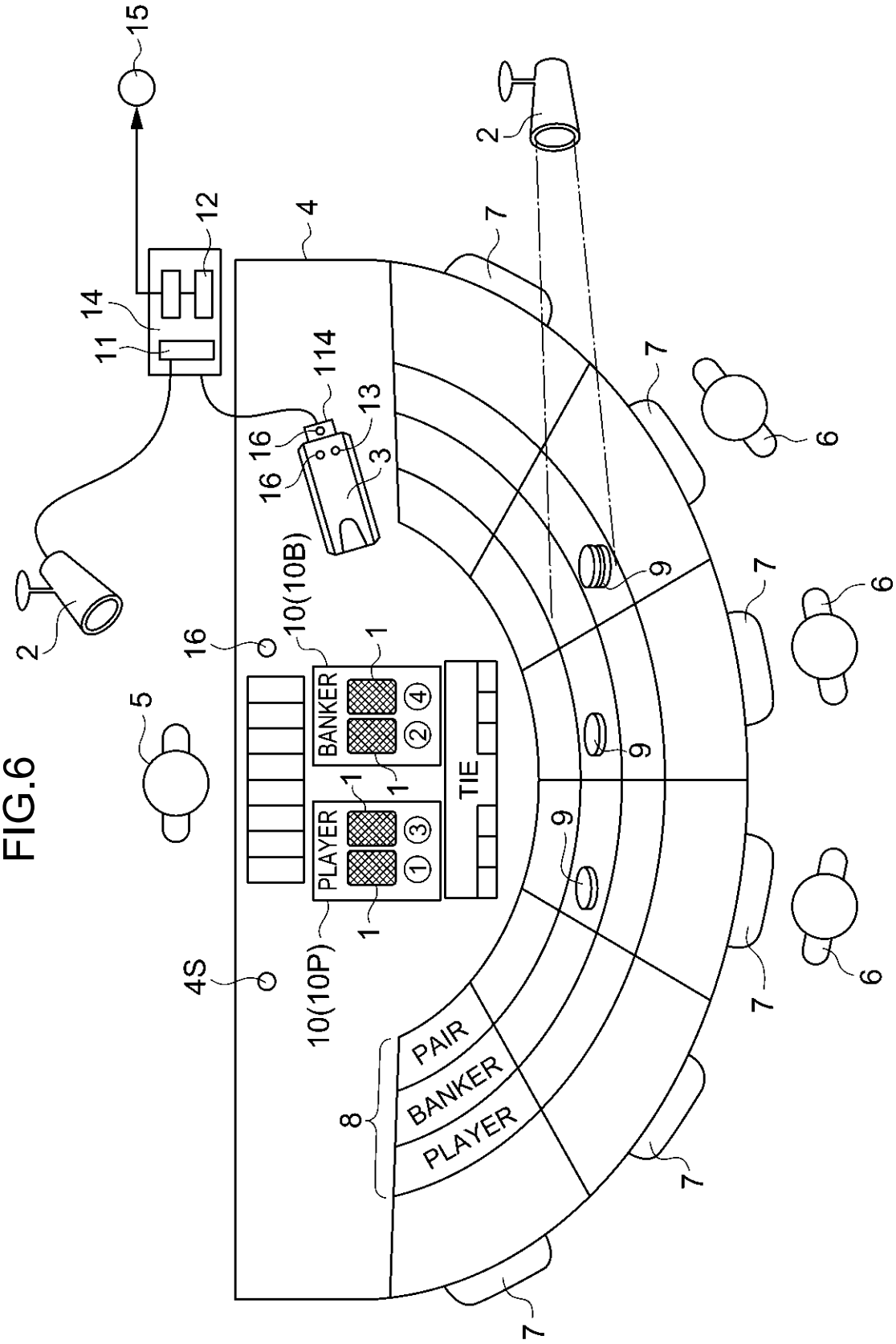
15
12
14
11
4
114
13
16
16
3
2
2
16
10(10B)
1
BANKER
2
4
1
5
TIE
1
PLAYER
1
3
1
10(10P)
4S
PAIR
BANKER
PLAYER
8
7
7
7
7
7
7
7
6
6
6
9
9
9

FIG.7

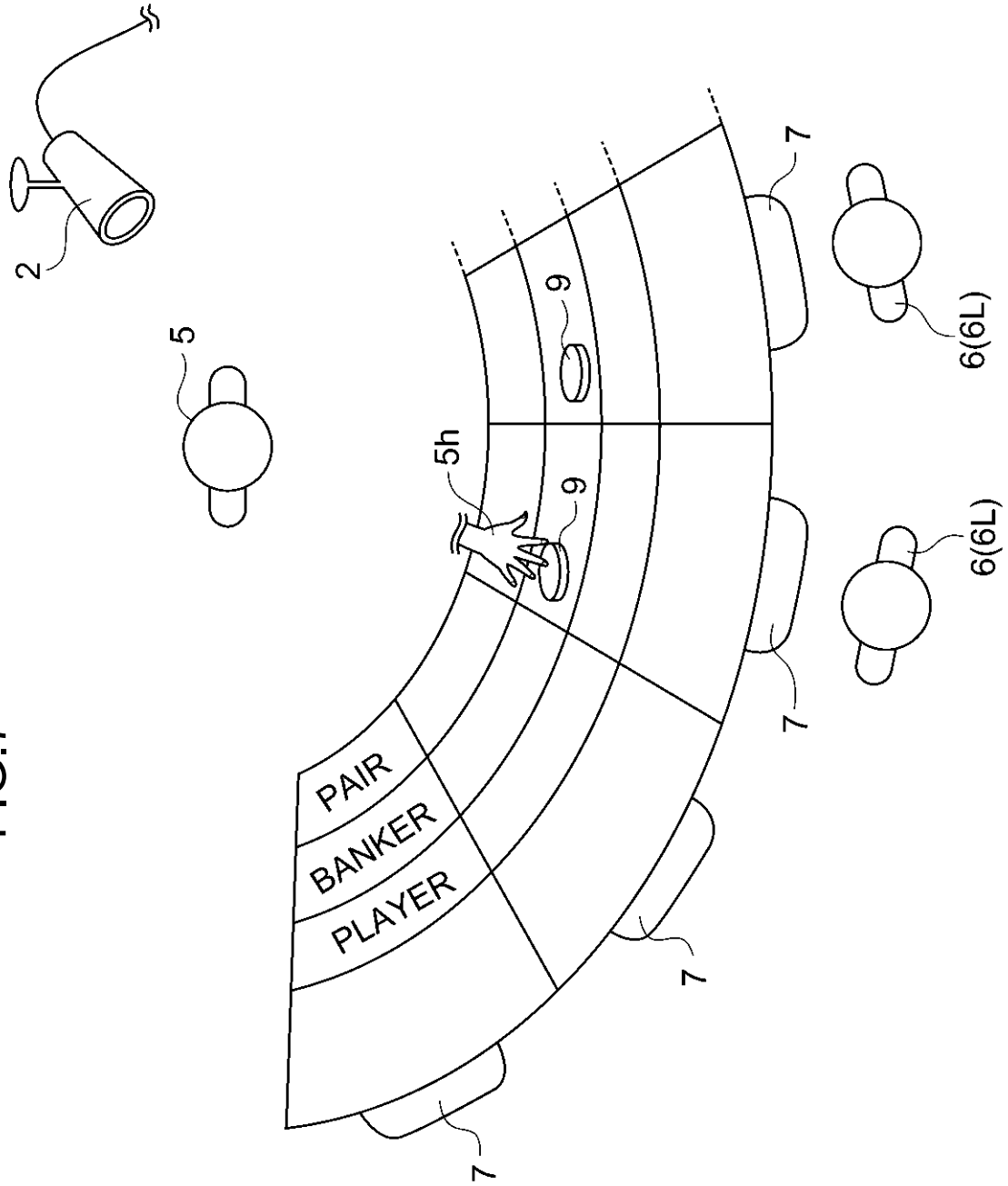

FIG.8

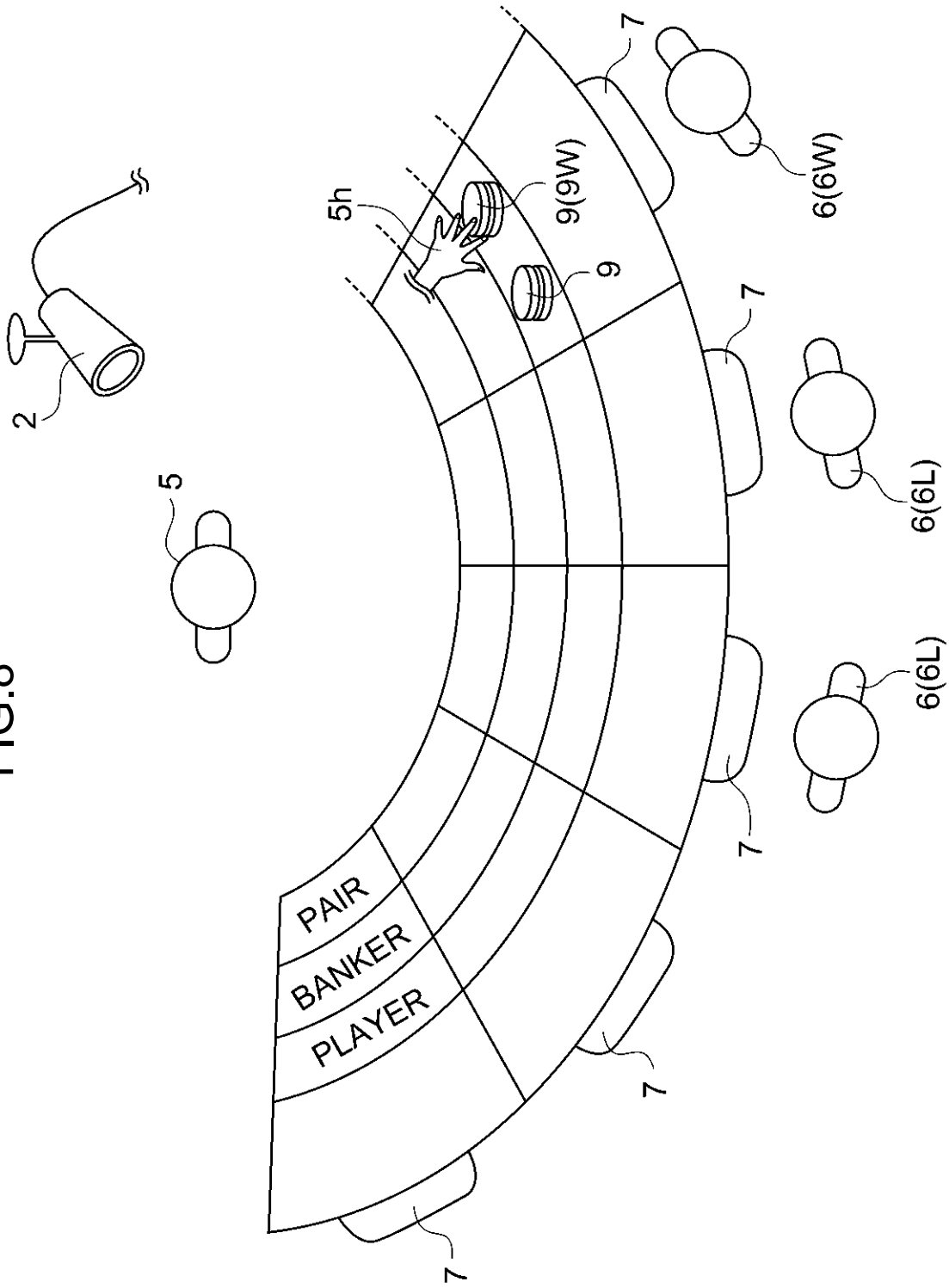

FIG.9

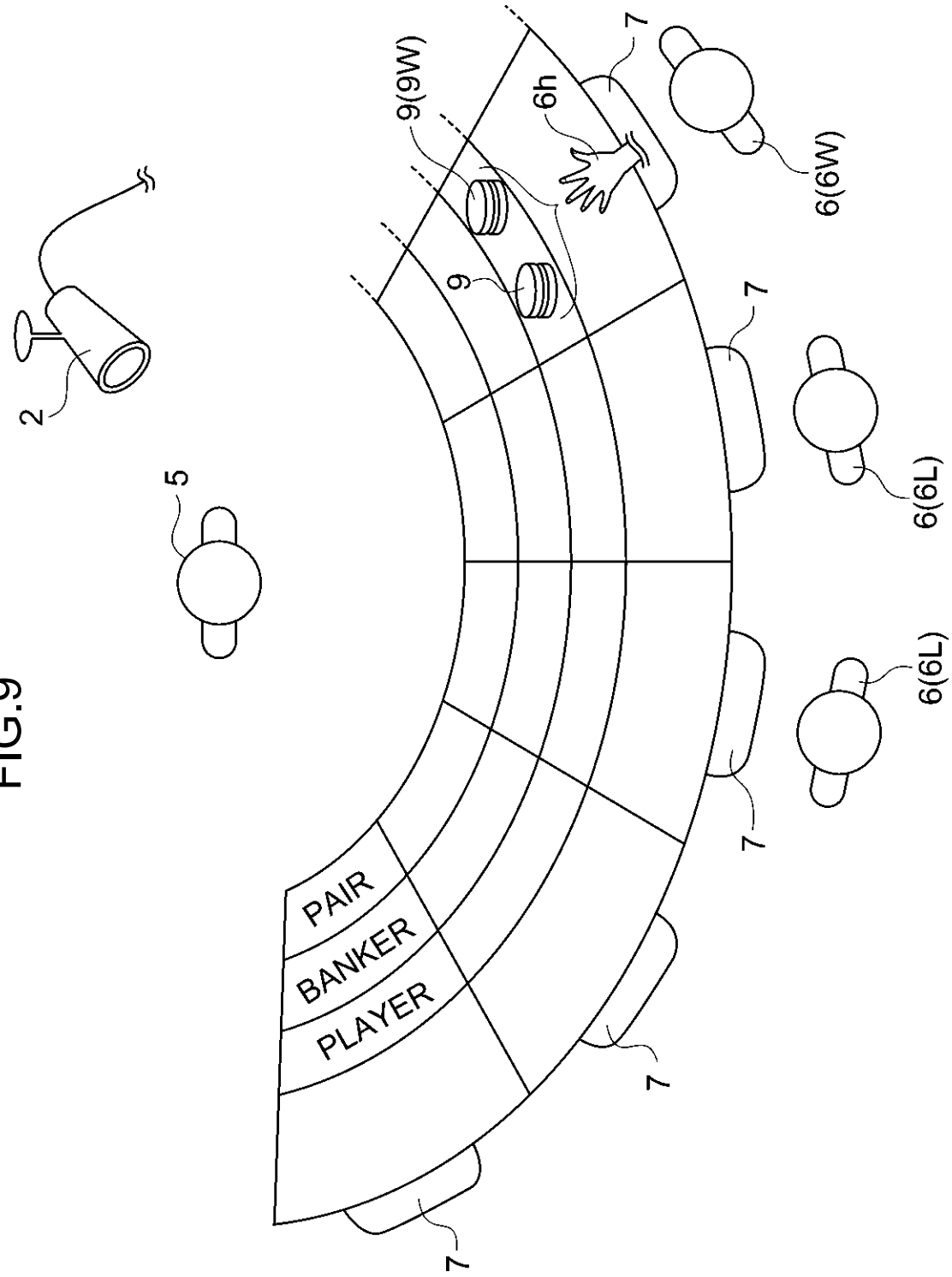

FIG.10A

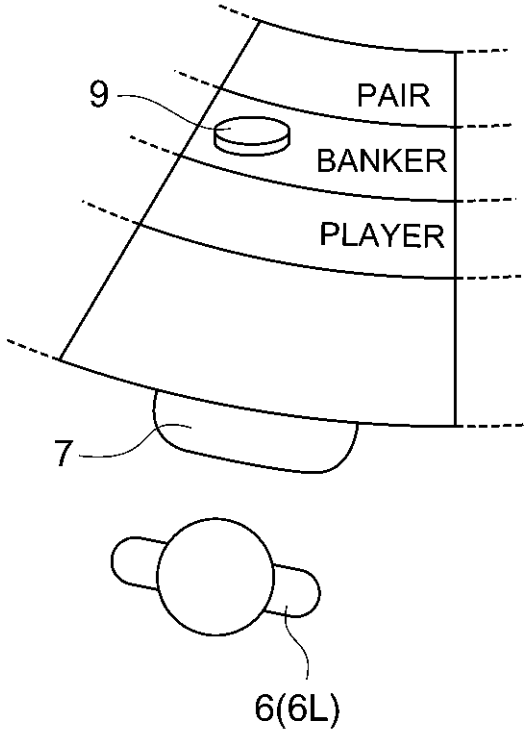

FIG.10B

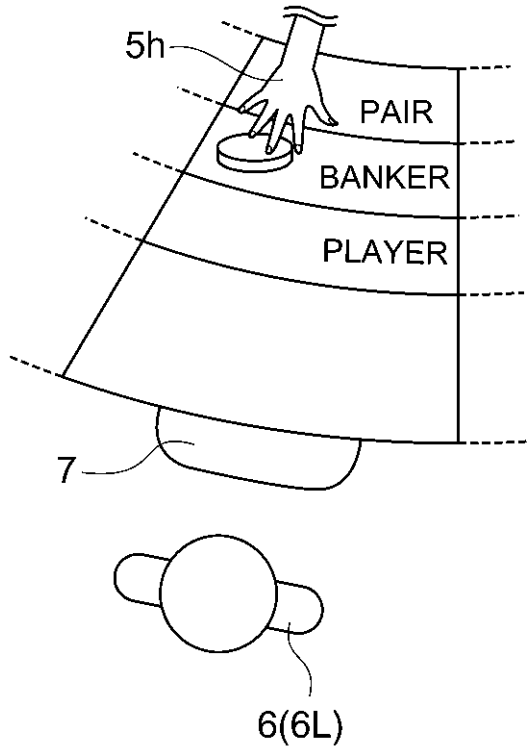

FIG.10C

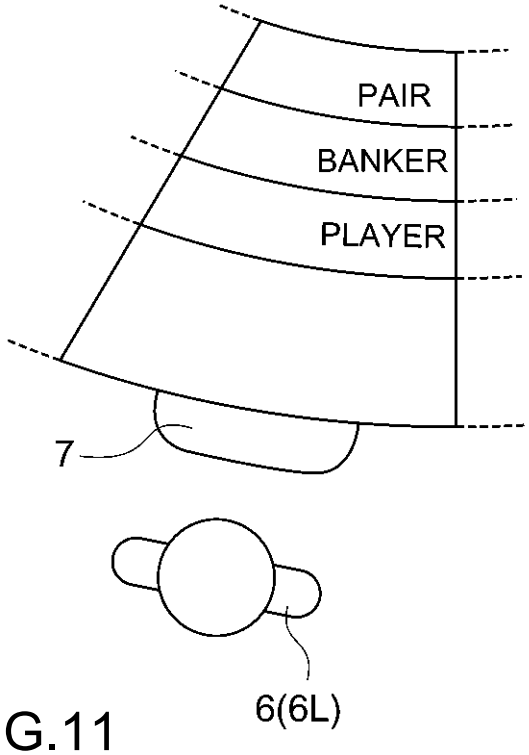

FIG.11

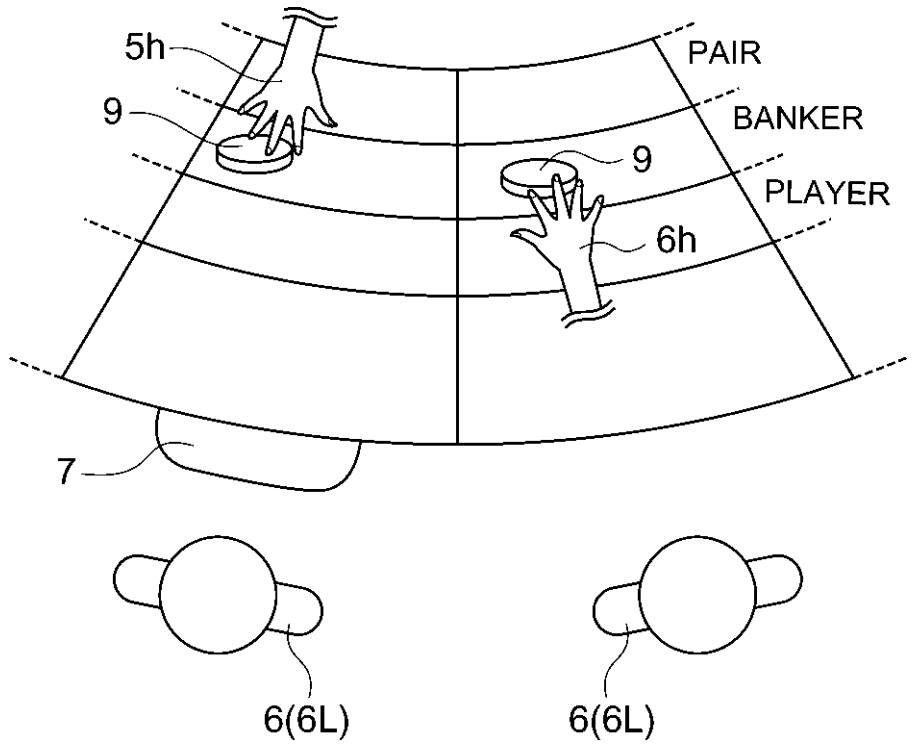

FIG.12A

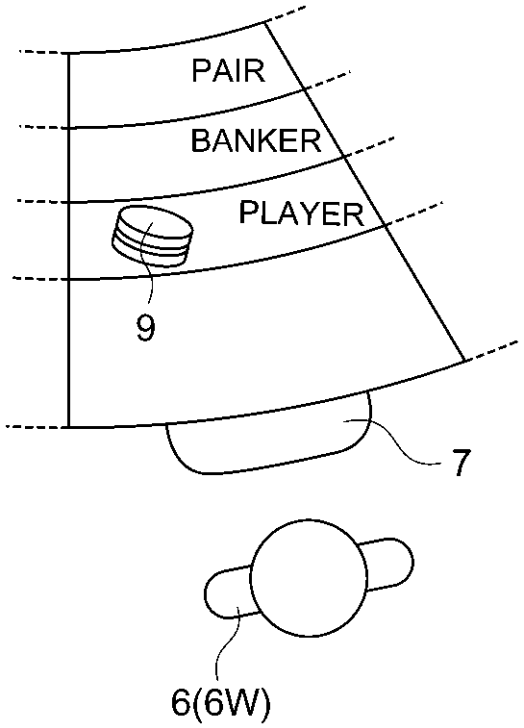

FIG.12B

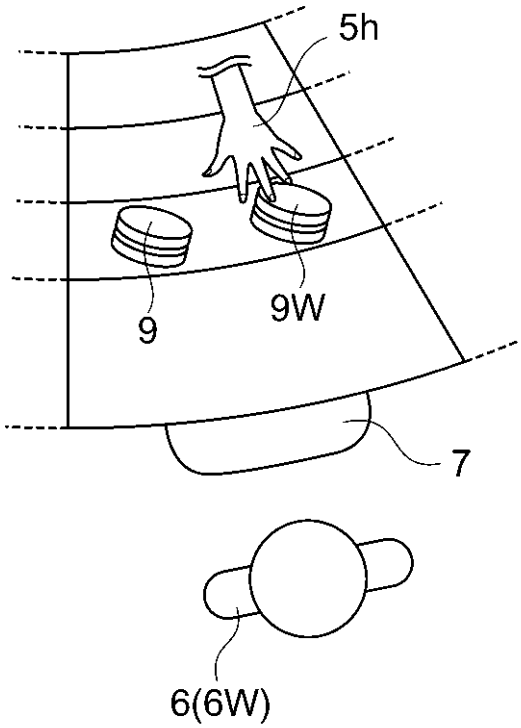

FIG.12C

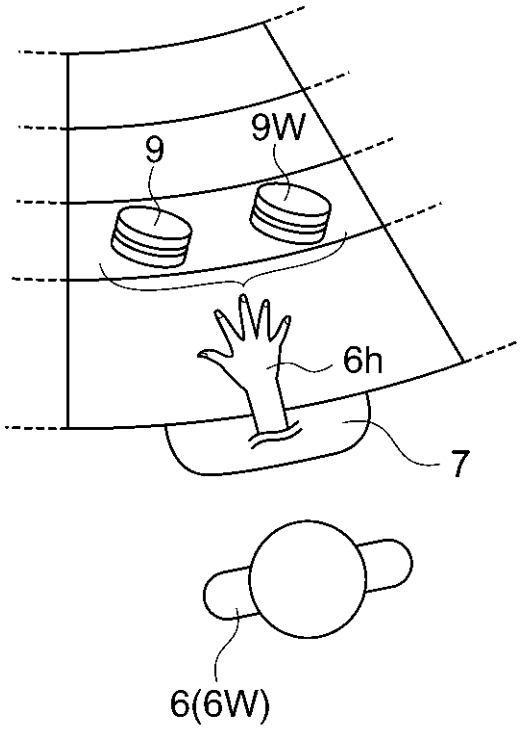

FIG.12D

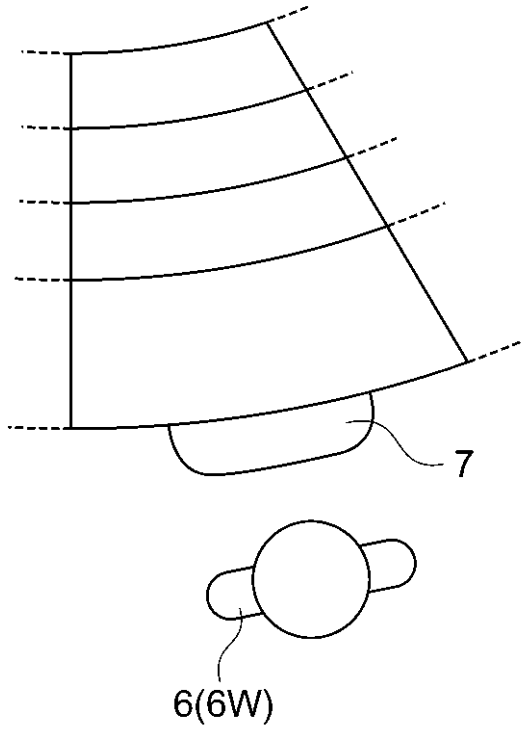

FIG.13

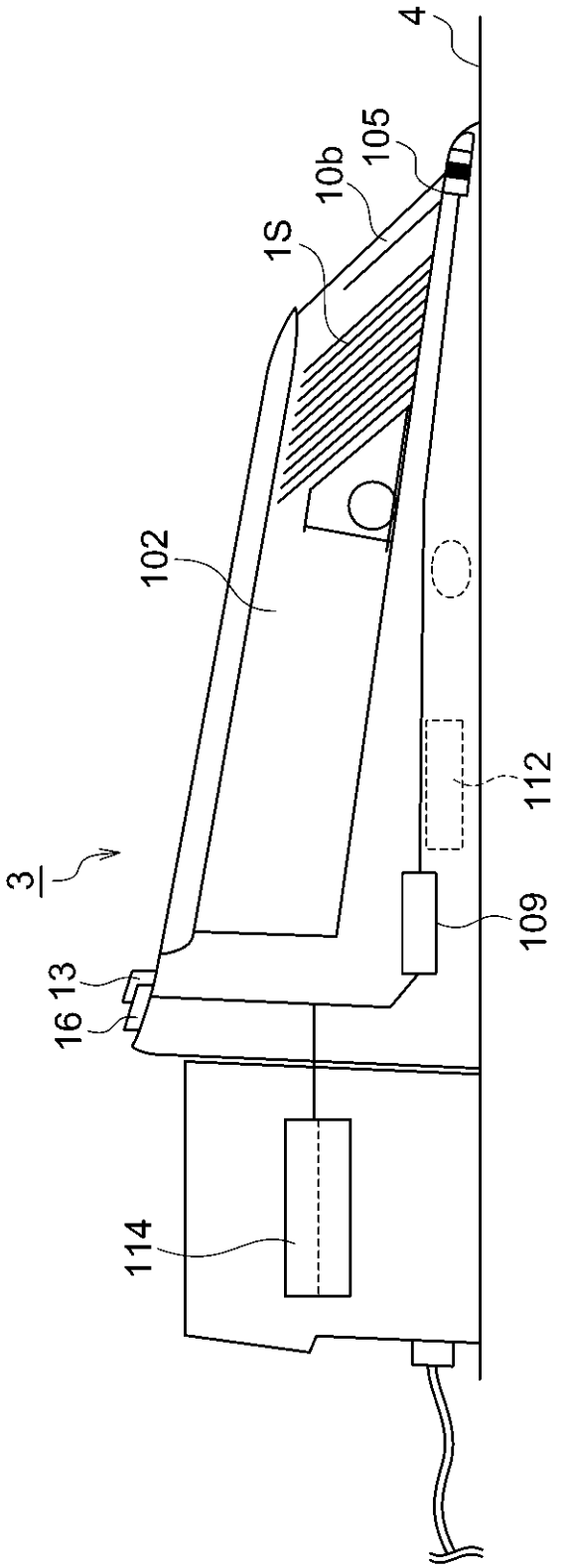

FIG.14

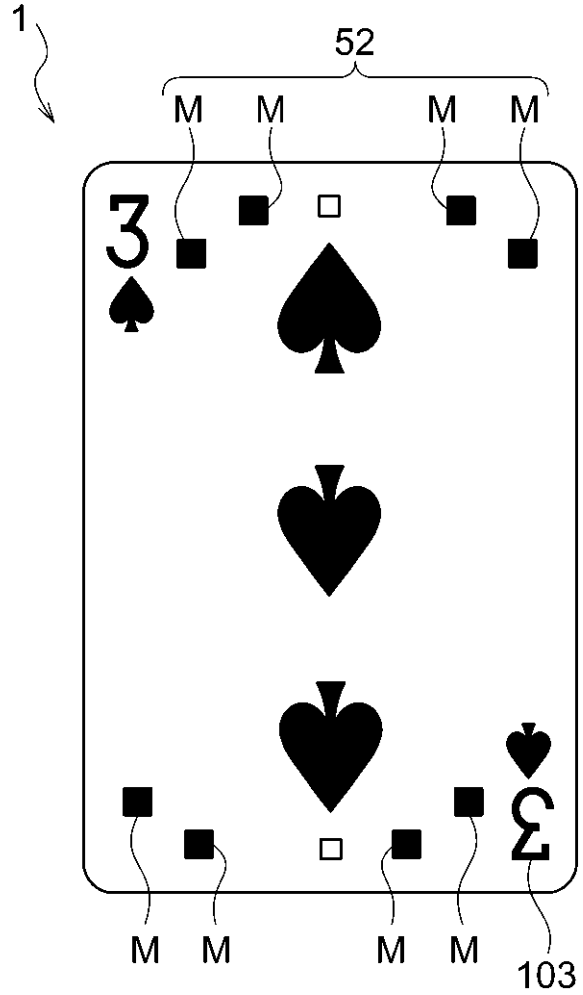

FIG.15

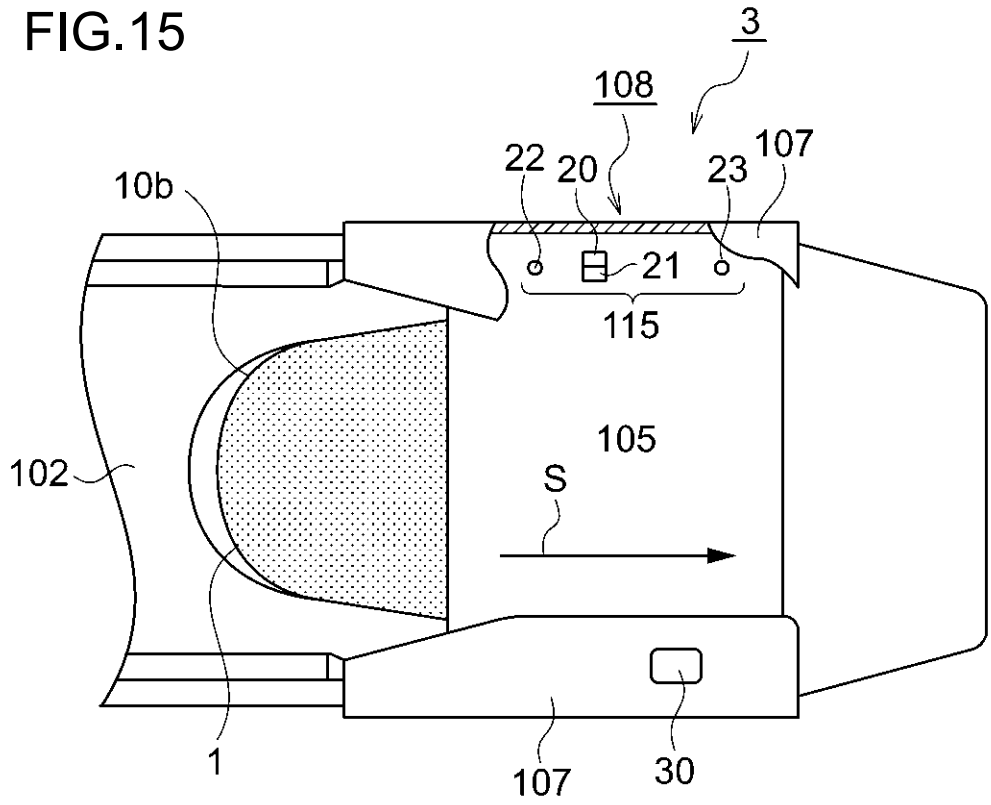

FIG.16A

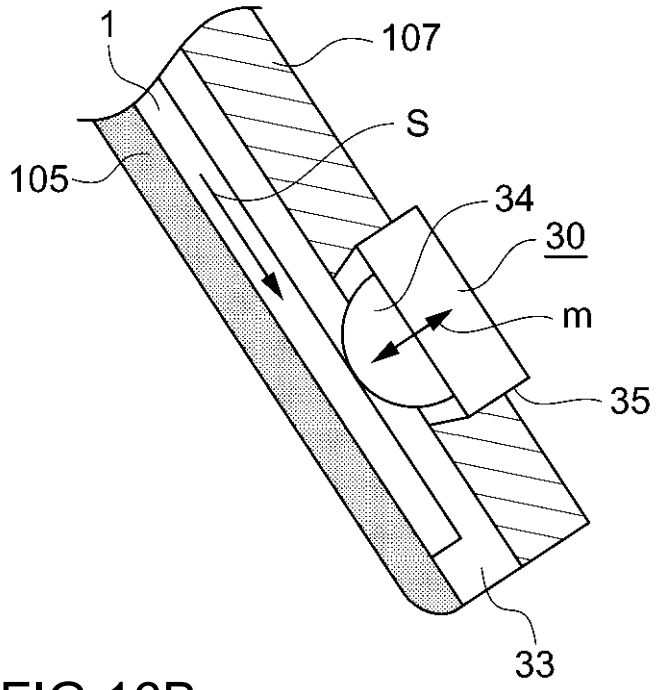

FIG.16B

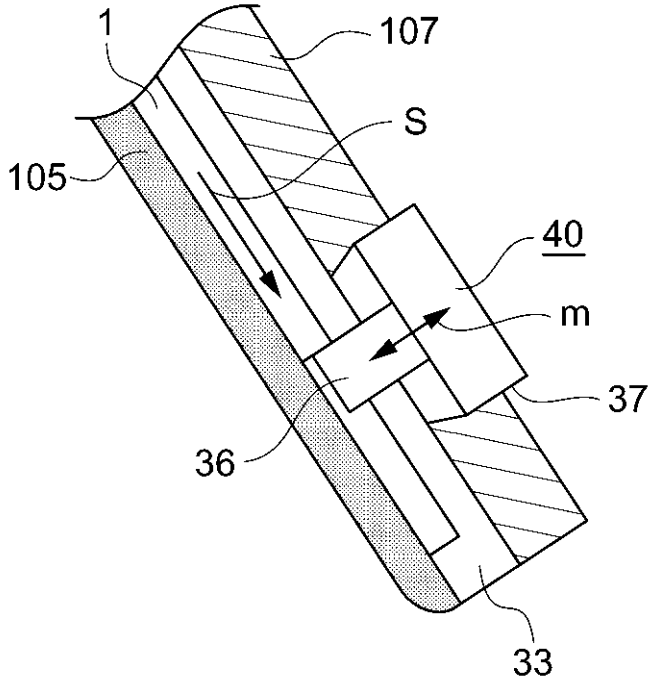

FIG.17

COMBINATION	MARKS	OUTPUT OF SENSORS
1	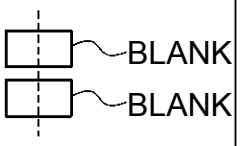	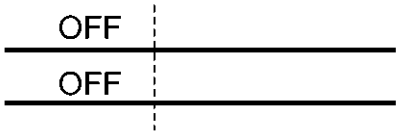
2	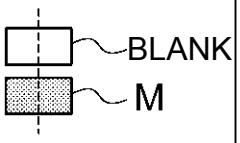	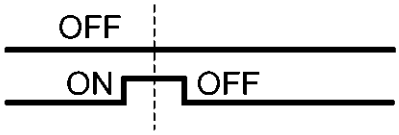
3	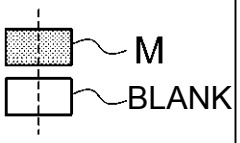	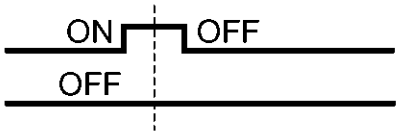
4	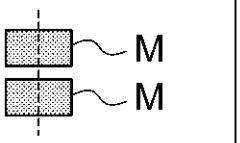	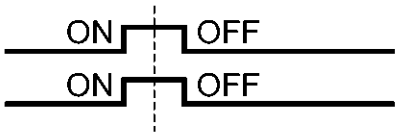

FIG.18

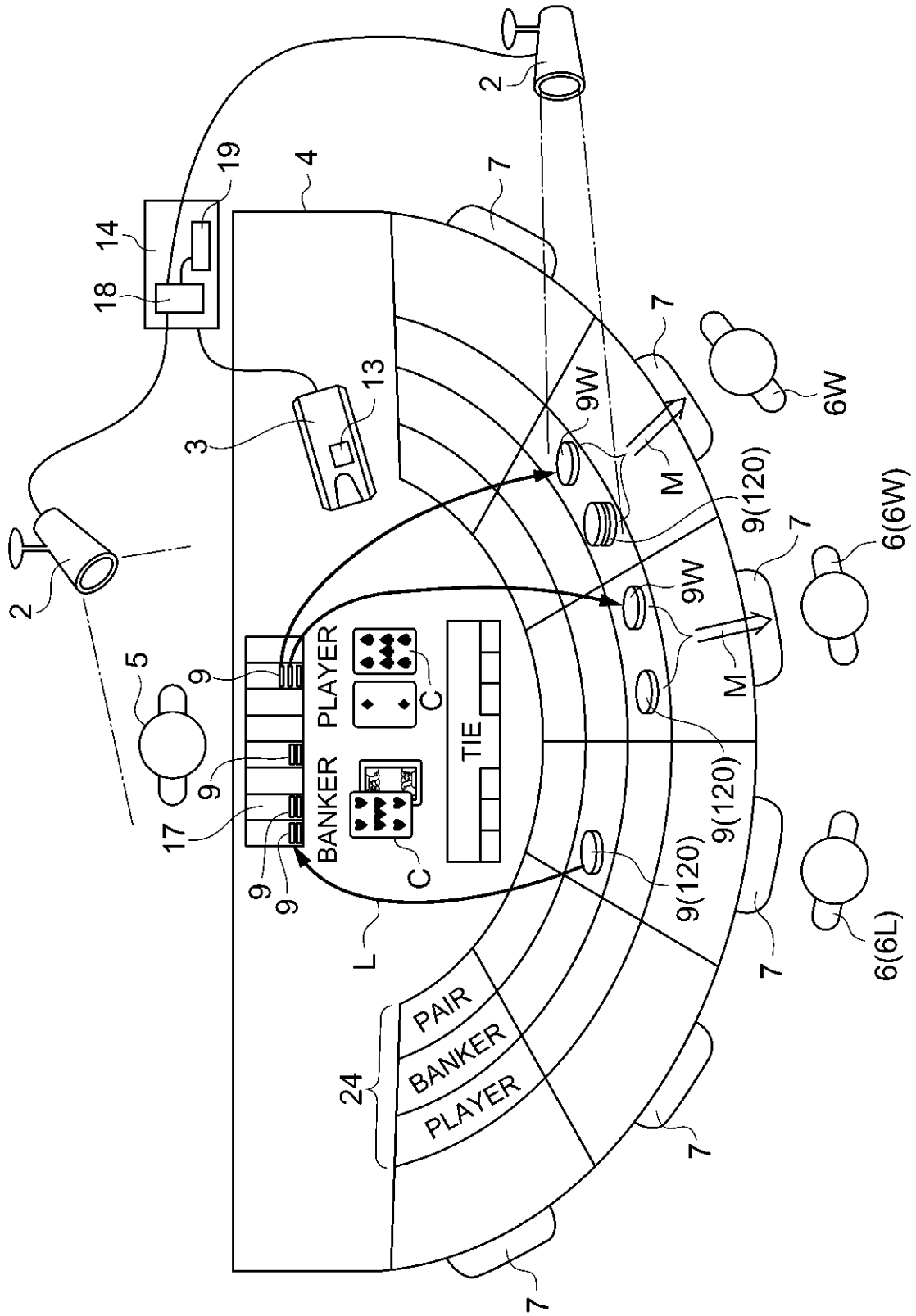
2
19
4
7
14
18
13
3
9W
M
9(120)
6W
6(6W)
5
9
PLAYER
C
TIE
BANKER
17
L
PAIR
BANKER
PLAYER
24
6(6L)

FIG.19

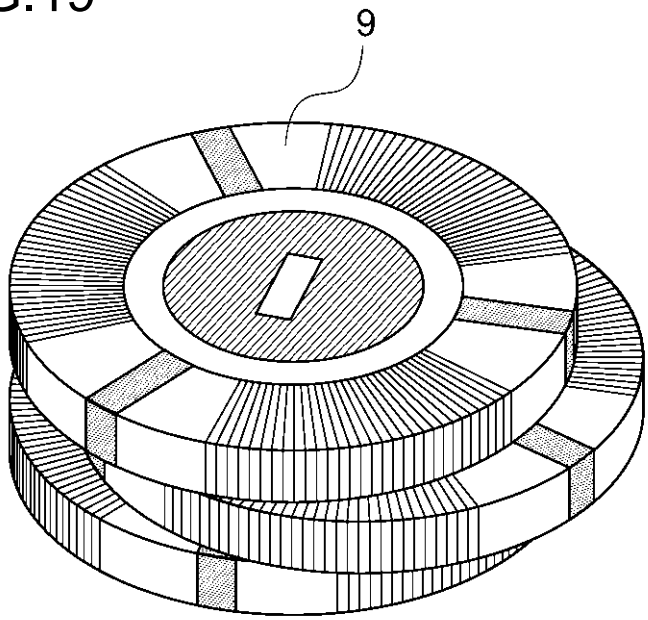

FIG.20

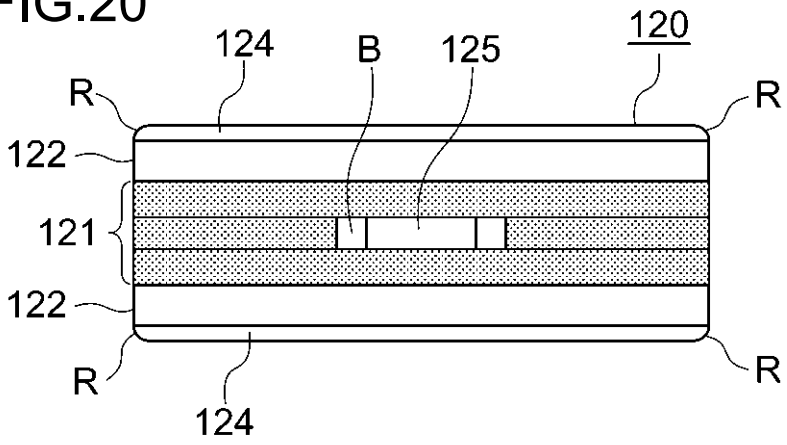

FIG.21

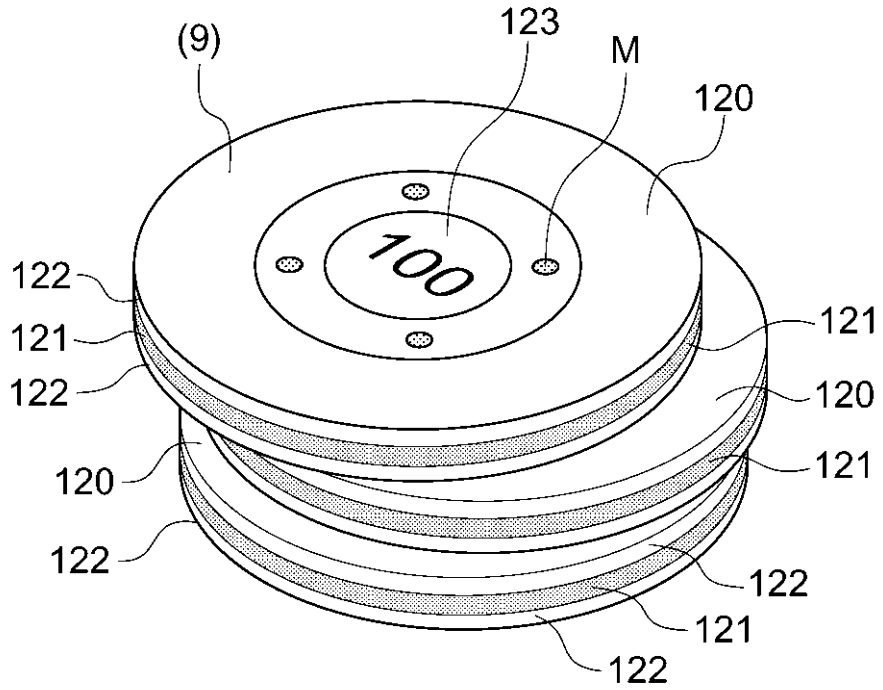

FIG.22A

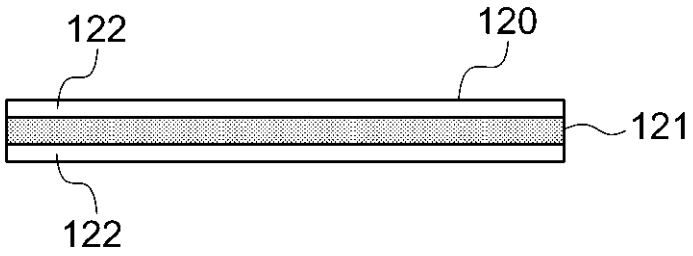

FIG.22B

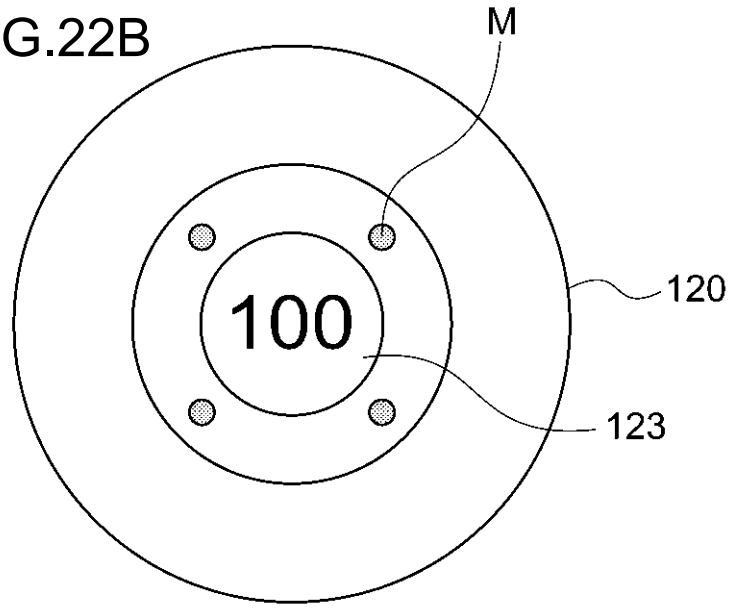

FIG.23

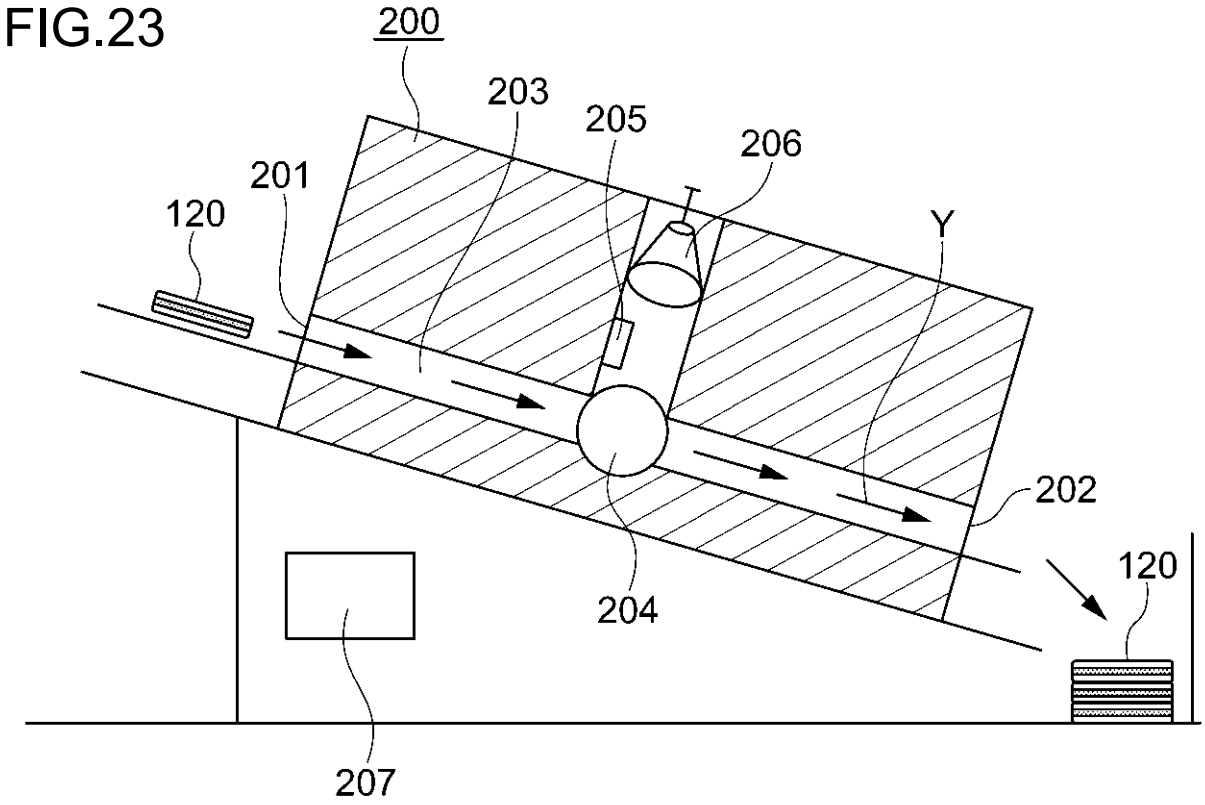

FIG.24

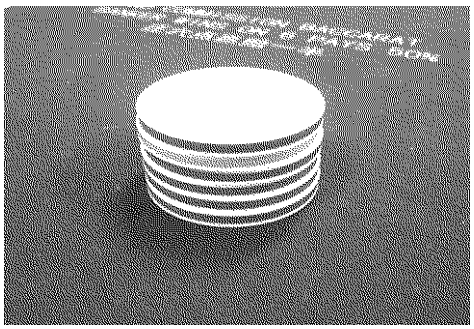

FIG.25

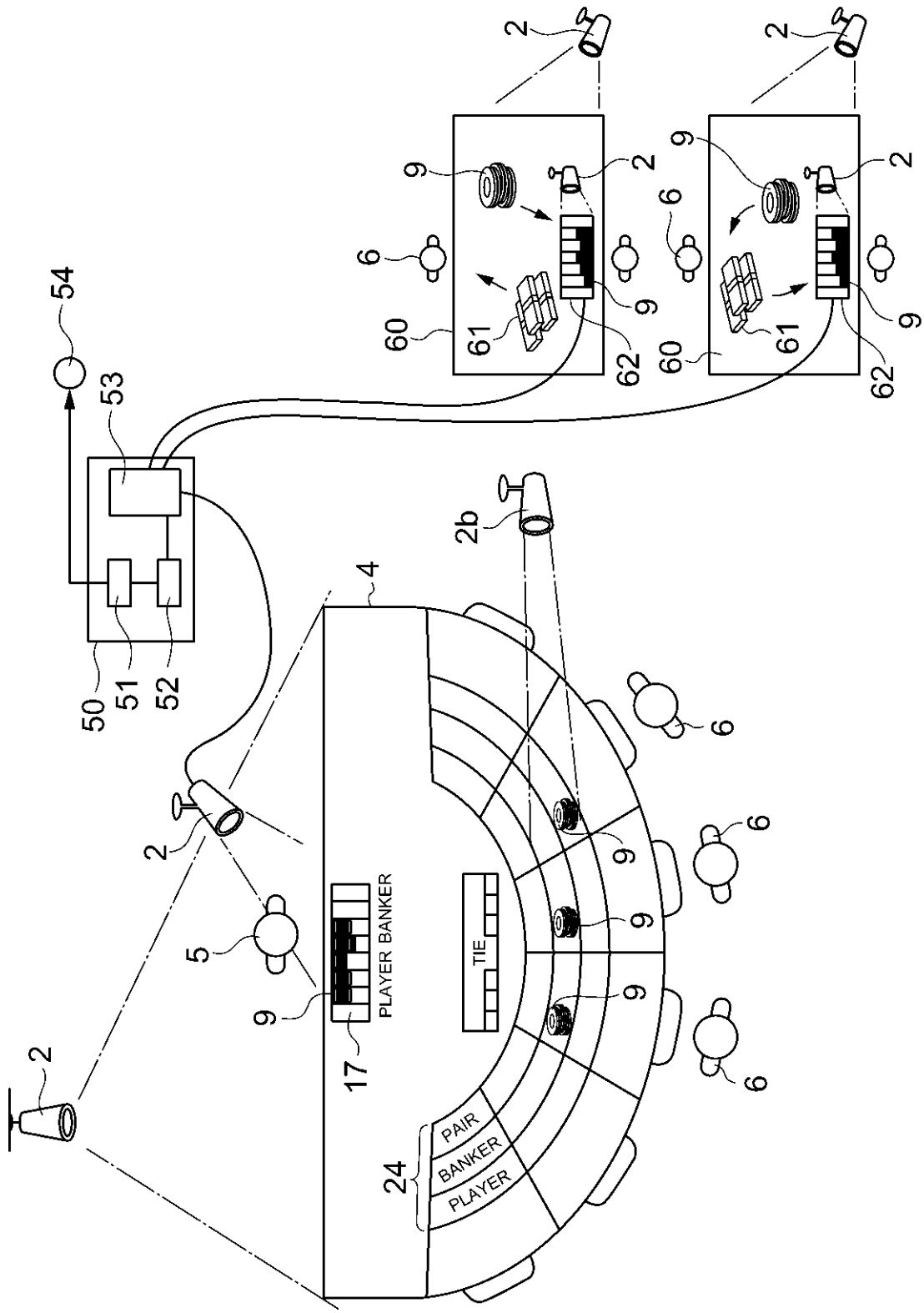

FIG.26

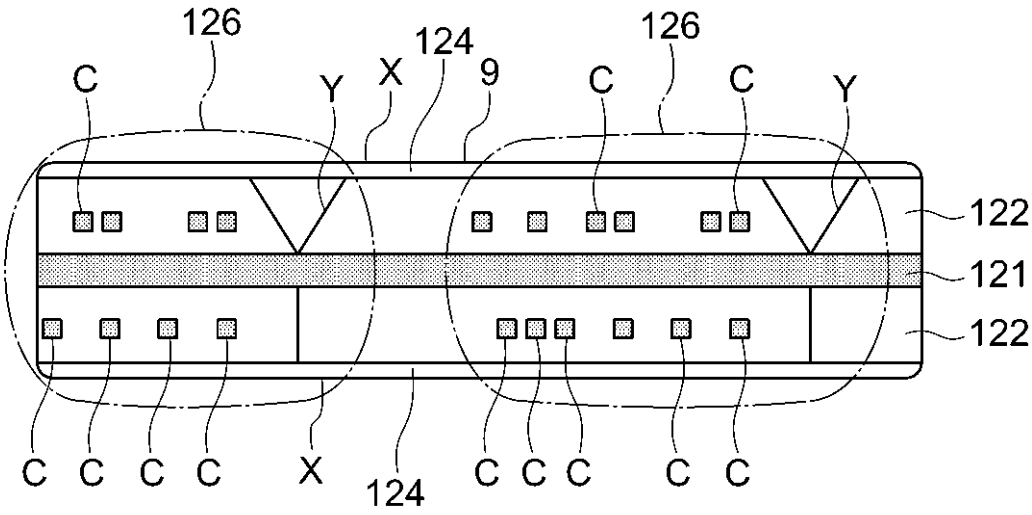

FIG.27A

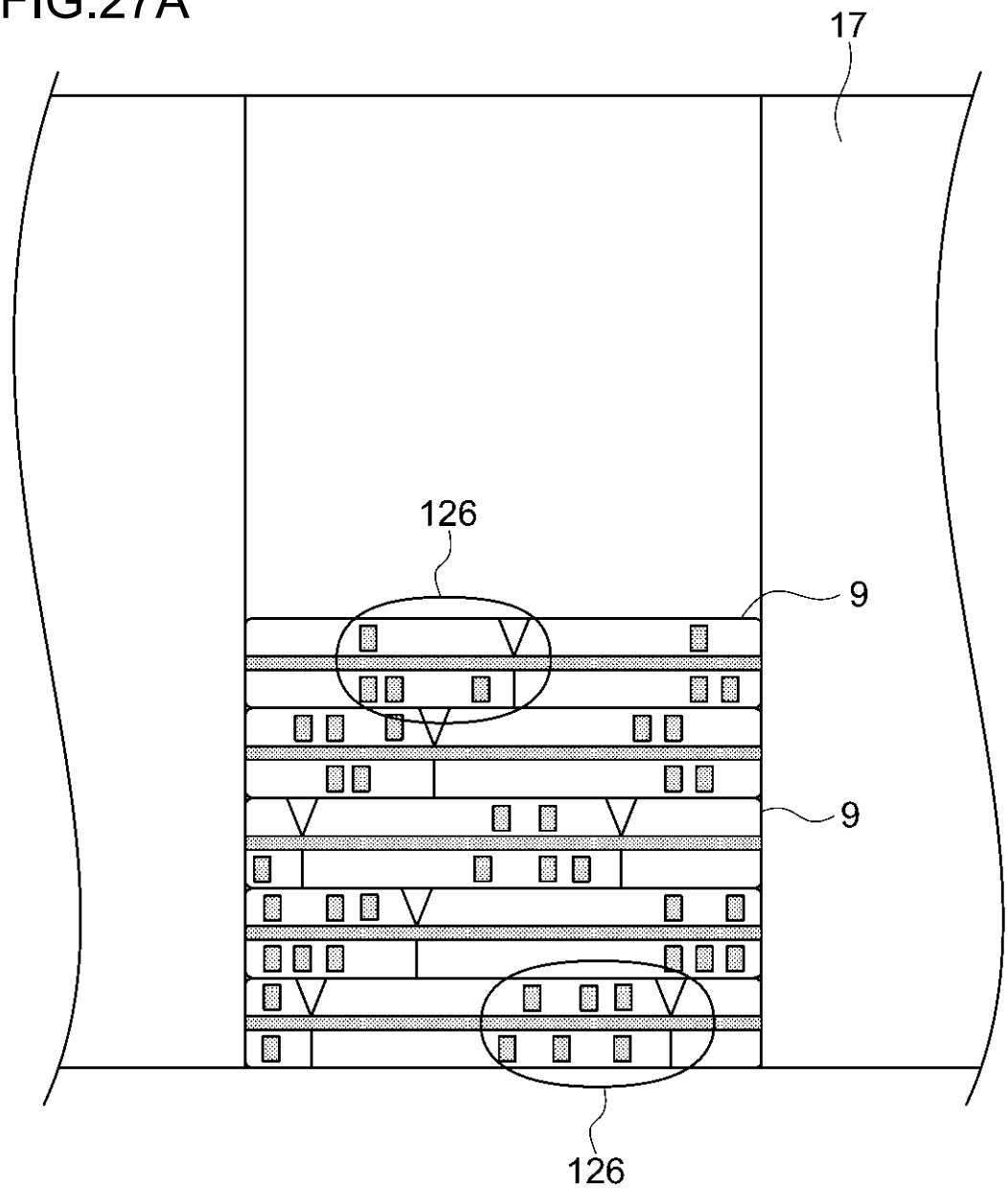

FIG.27B

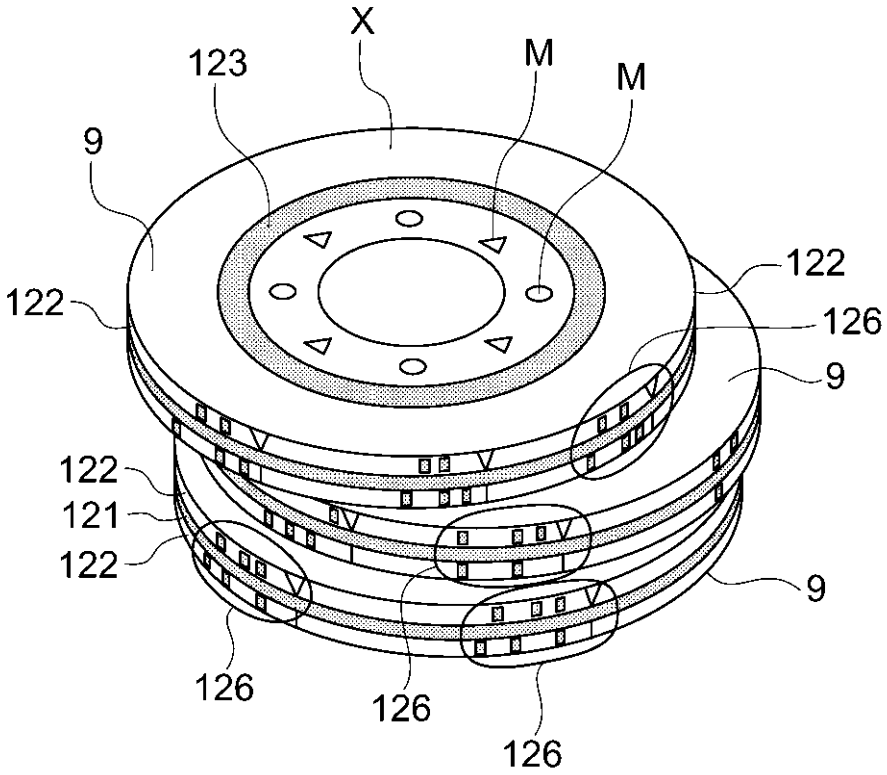

FIG.28

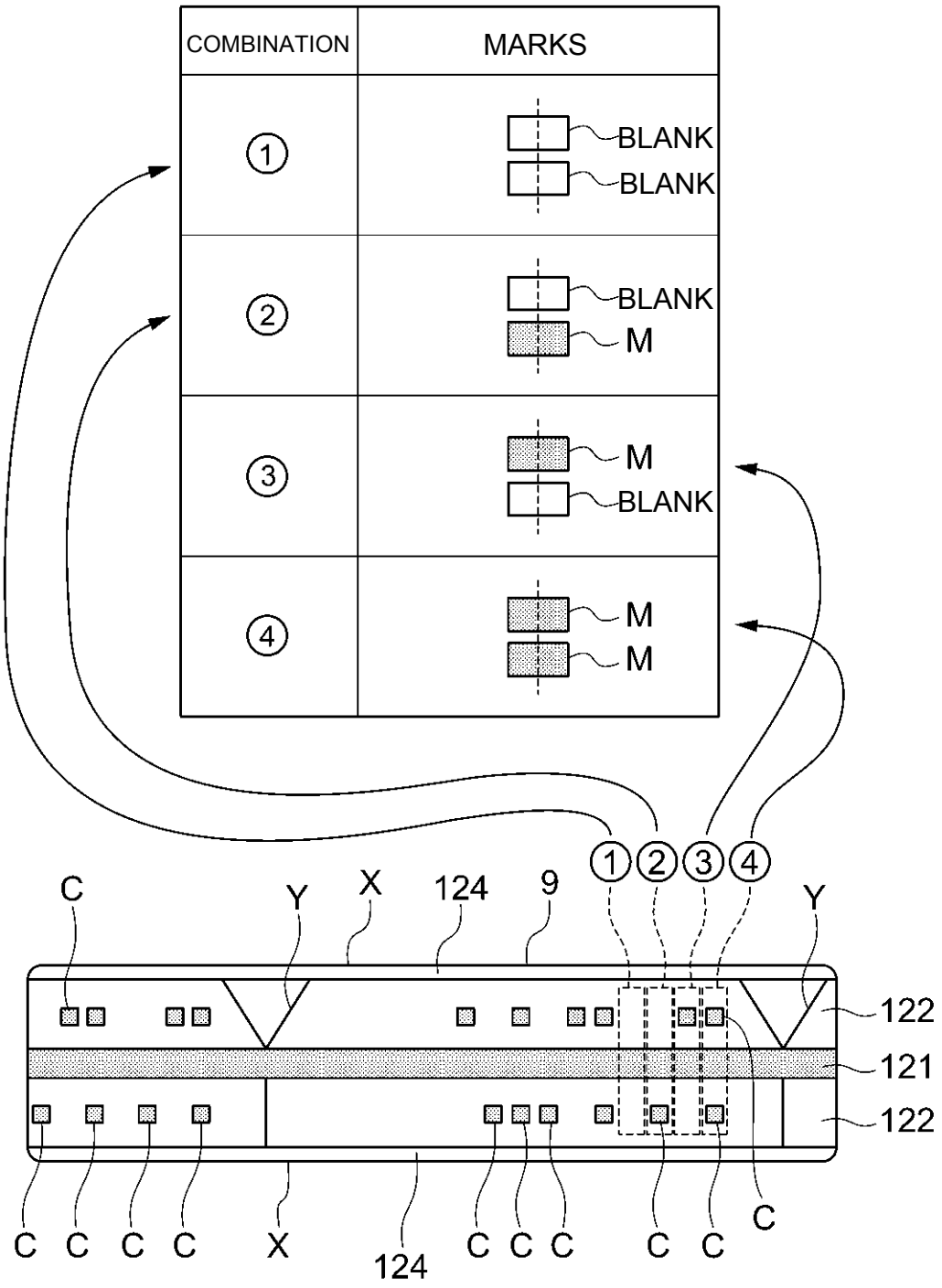
COMBINATION
MARKS
①
BLANK
BLANK
②
BLANK
M
③
M
BLANK
④
M
M
①
②
③
④
C
Y
X
124
9
Y
122
121
122
C
C
C
C
X
124
C
C
C
C
C
C
C

FIG.29

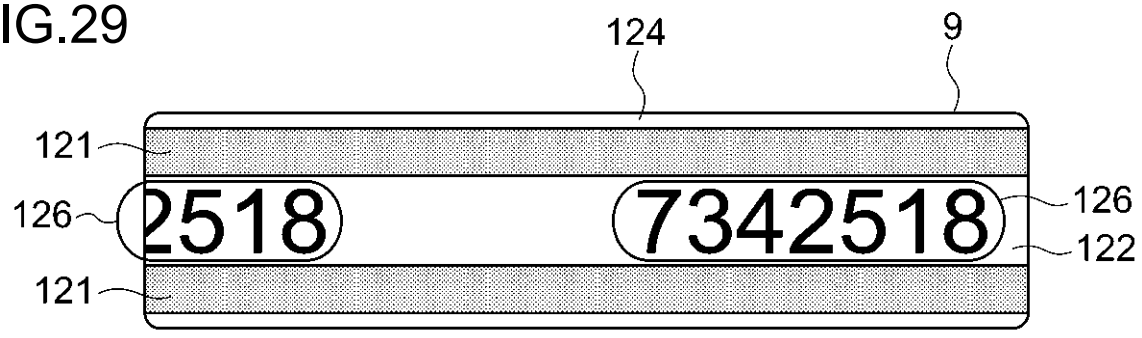
124
9
121
126
2518
7342518
126
122
121