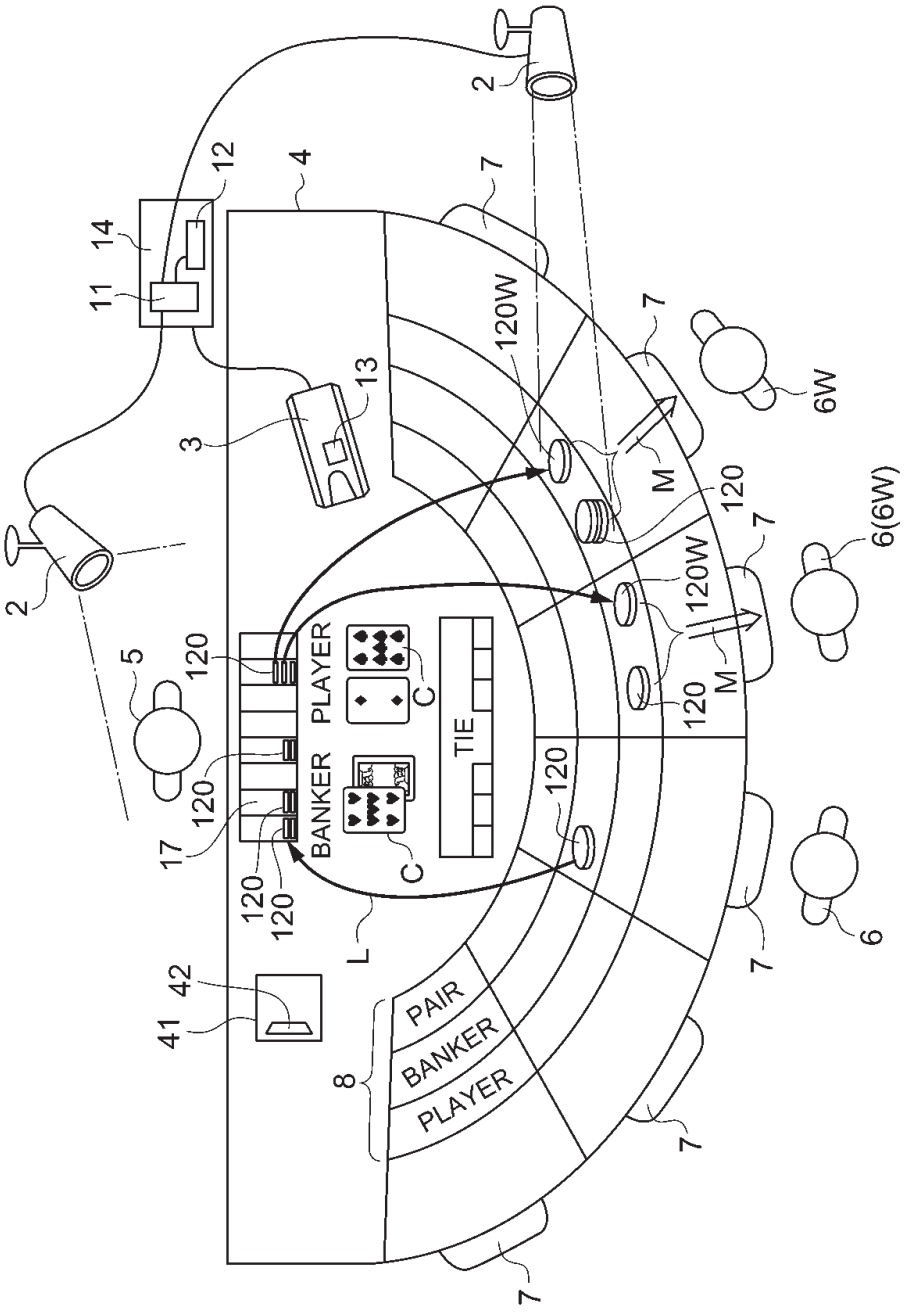
2
4
12
14
11
13
3
7
120W
M
120
6W
6(6W)
5
120
PLAYER
BANKER
C
TIE
17
L
6
42
41
8
PAIR
BANKER
PLAYER

Fig.1

Fig.2A

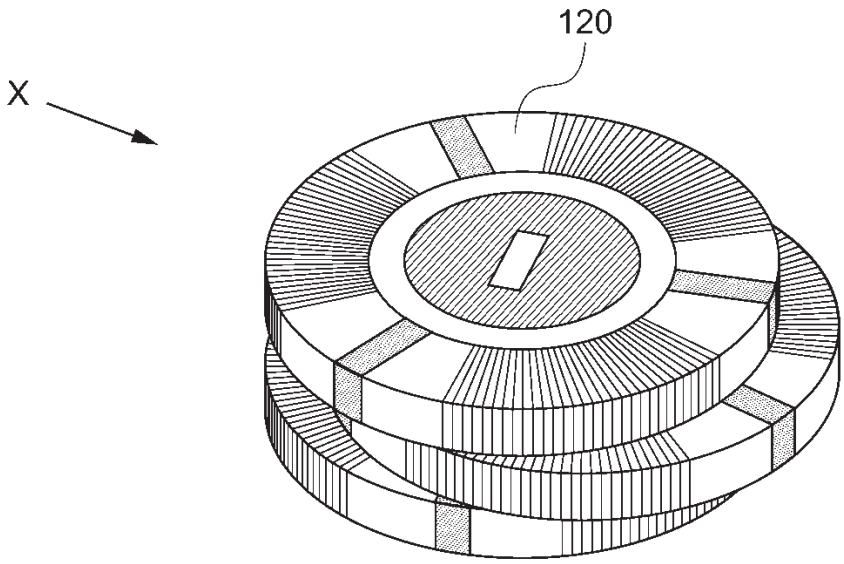

Fig.2B

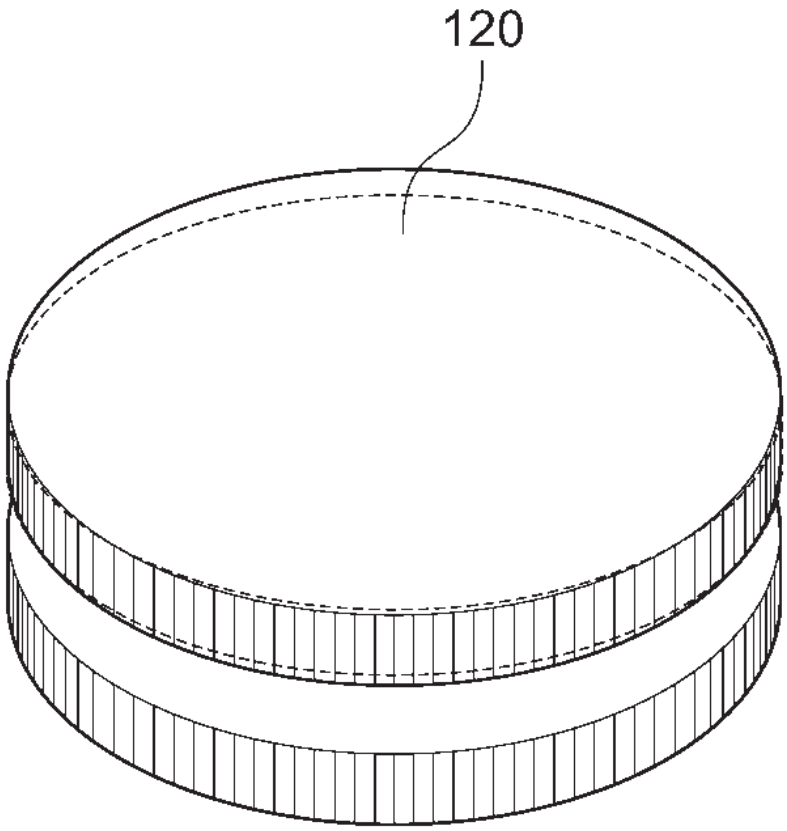

Fig.3

Fig.4A

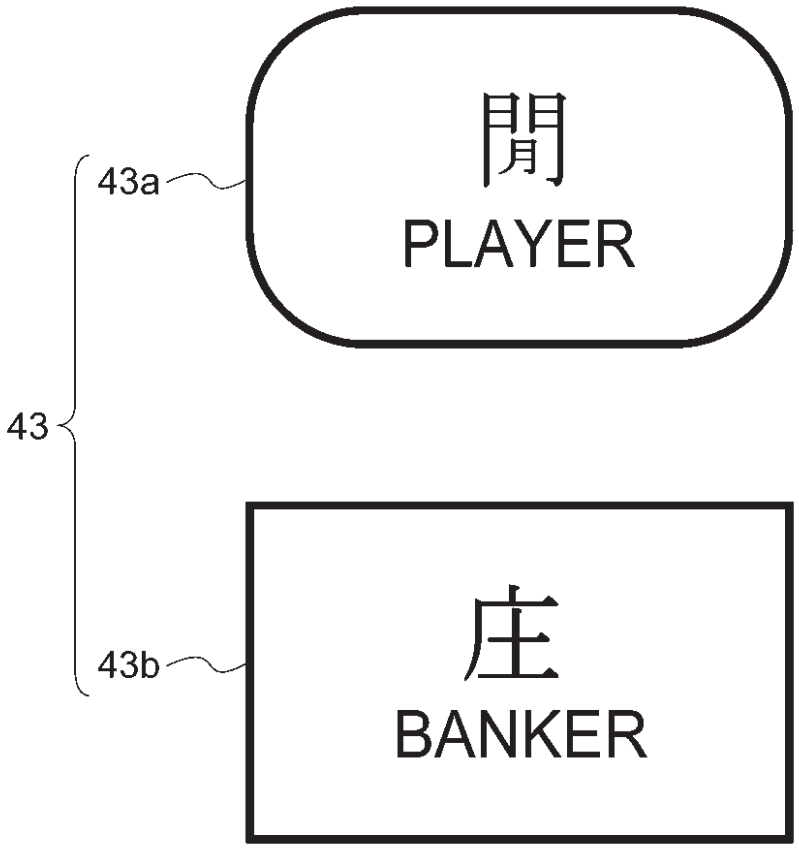

Fig.4B

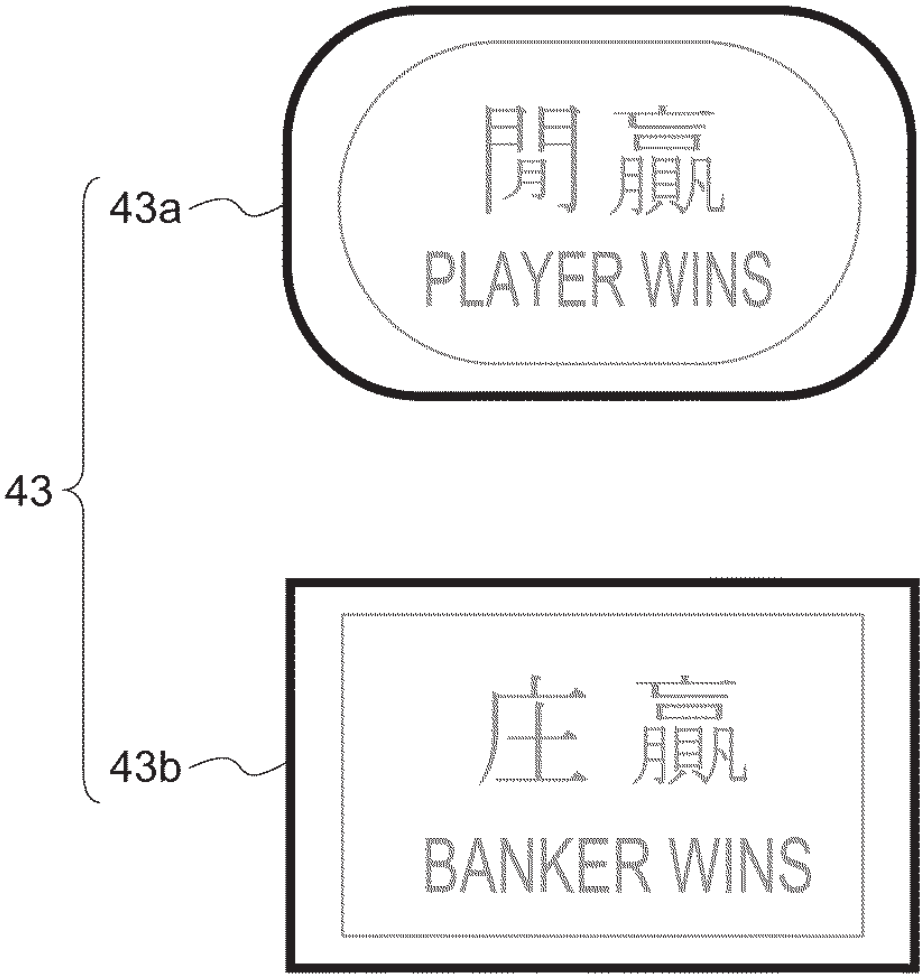

Fig.5

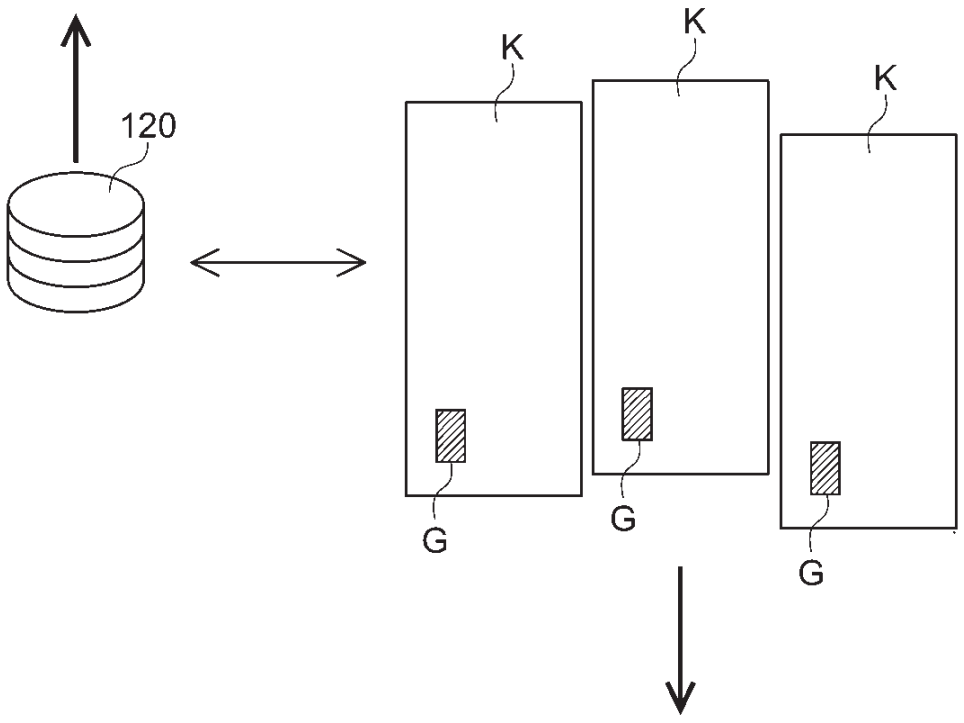

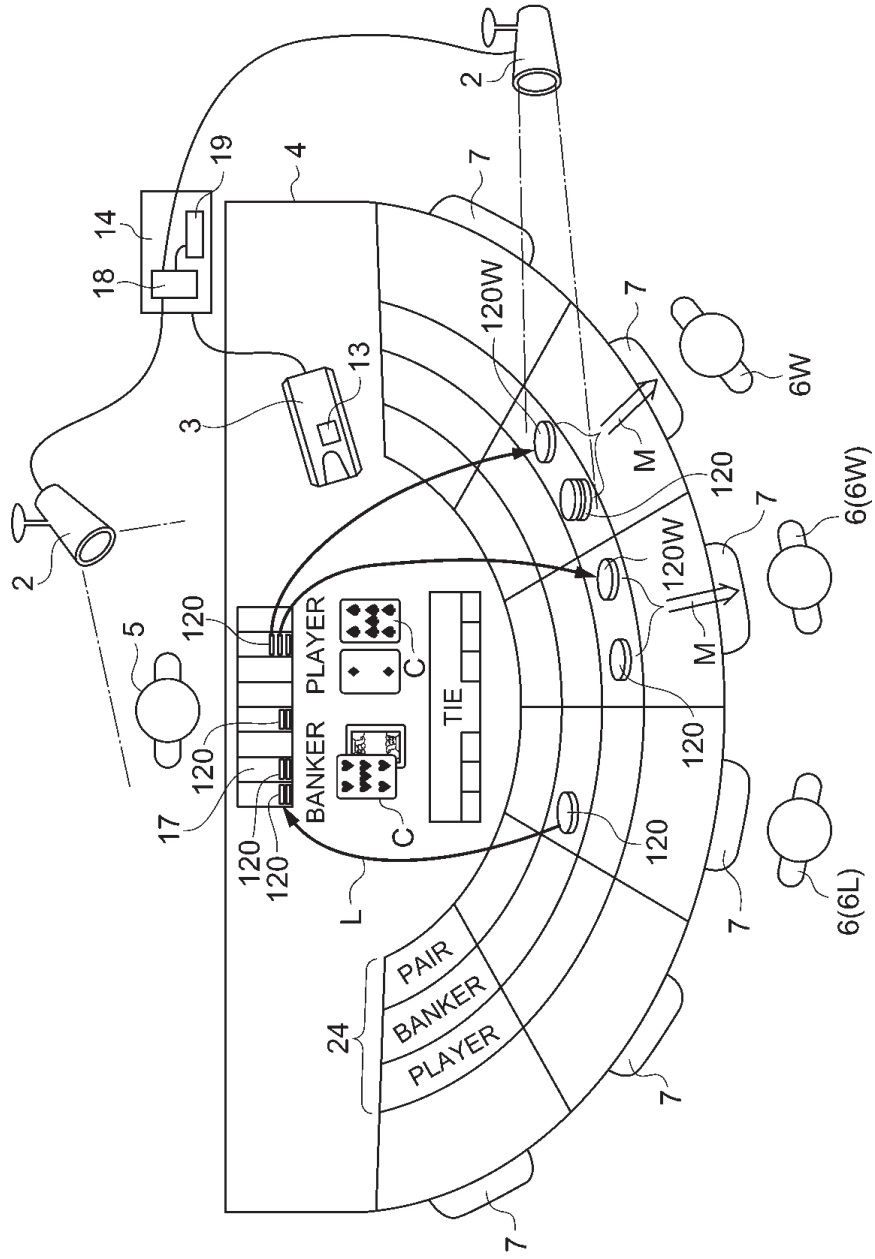
2
19
4
7
14
18
120W
7
6W
13
3
M
120
7
6(6W)
2
120W
5
120
PLAYER
C
M
TIE
120
BANKER
120
17
C
120
120
120
L
7
6(6L)
PAIR
BANKER
PLAYER
24
7
7

Fig.6

Fig.7

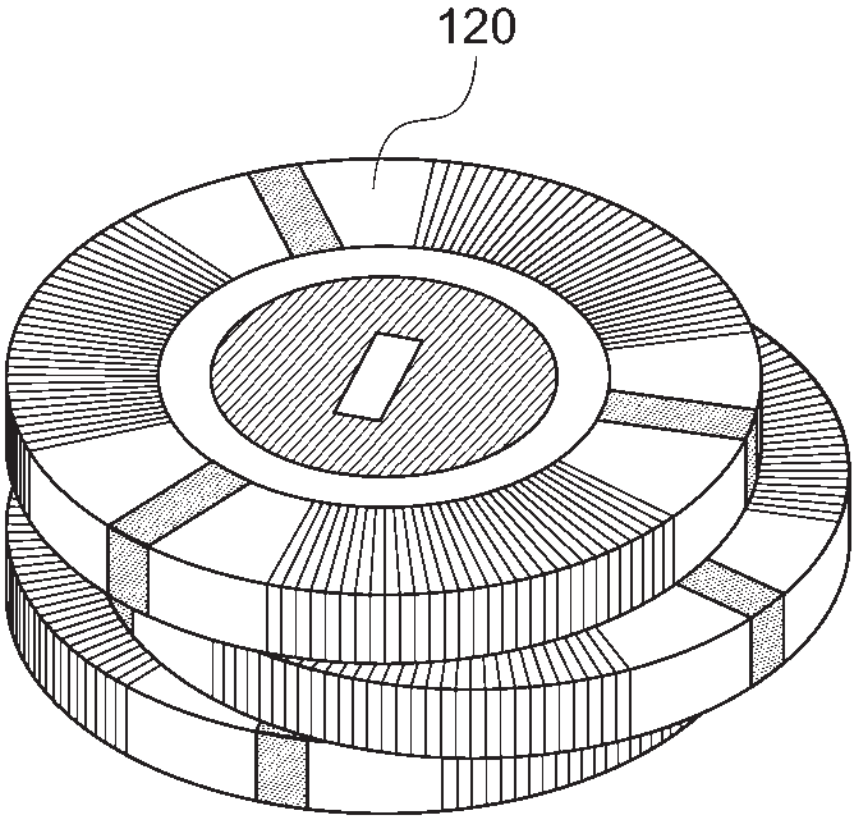

Fig.8

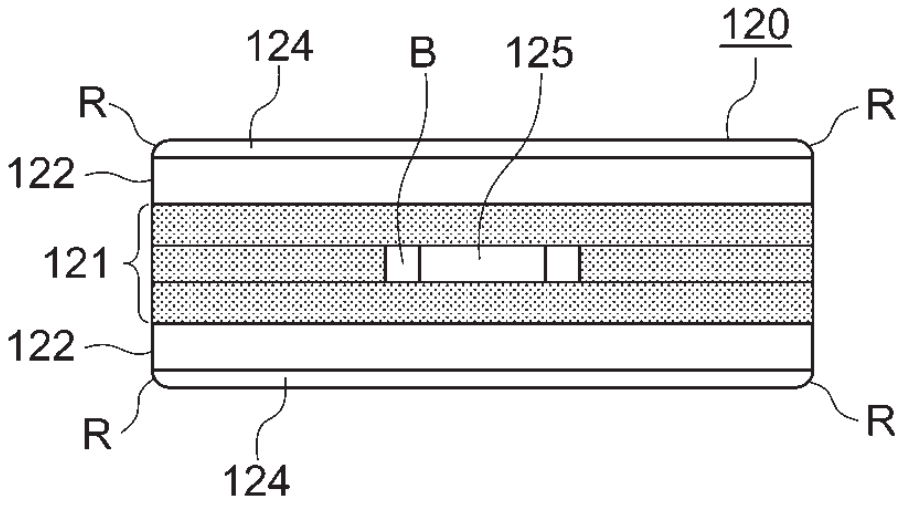

Fig.9A

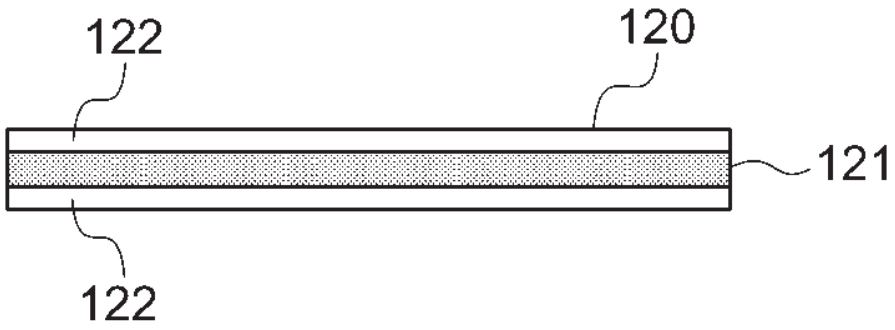

Fig.9B

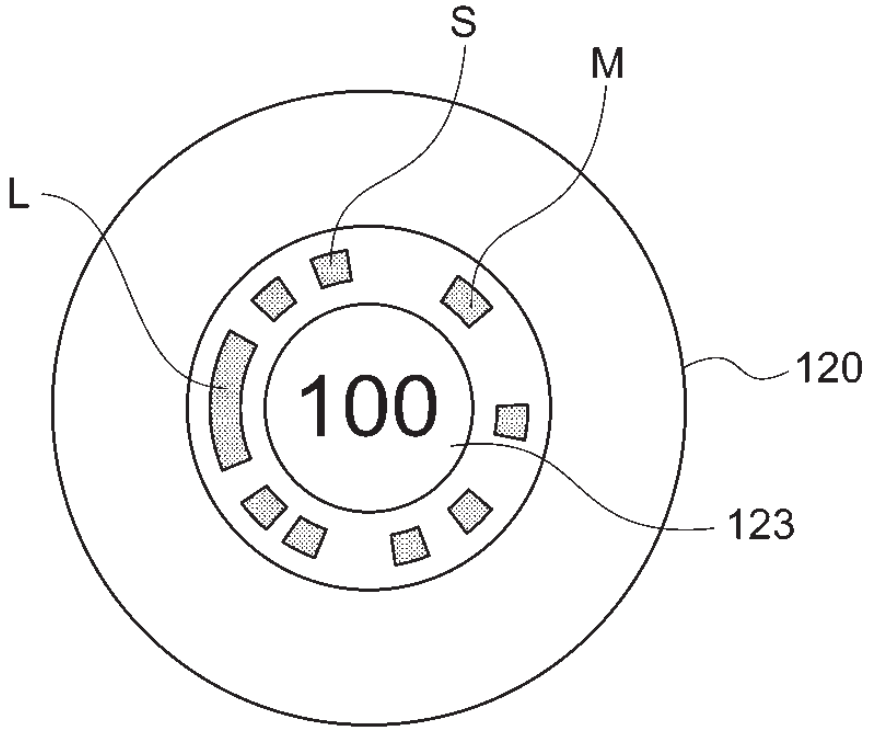

Fig.10A

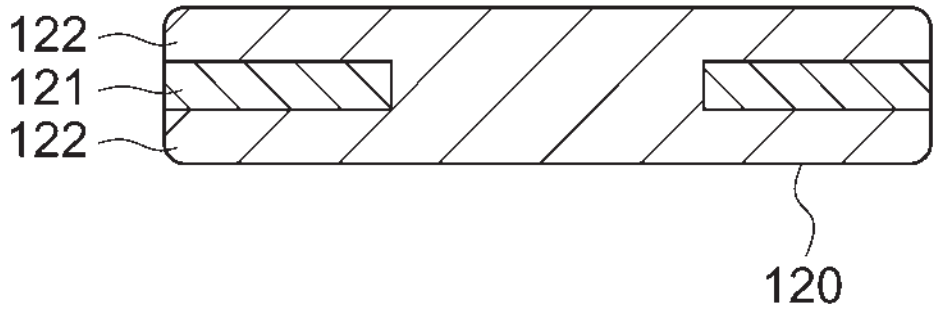

Fig.10B

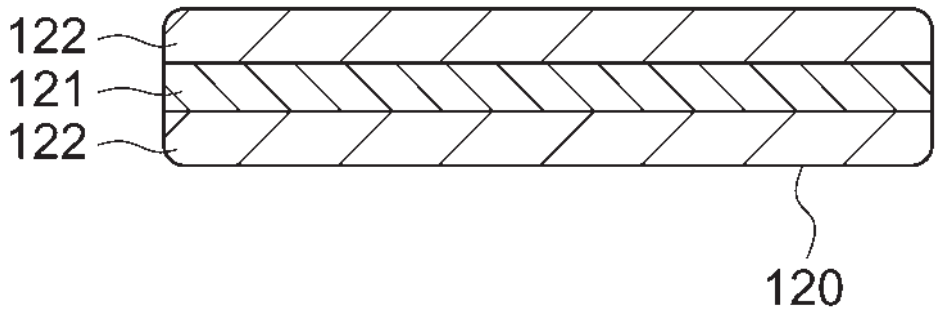

Fig.11

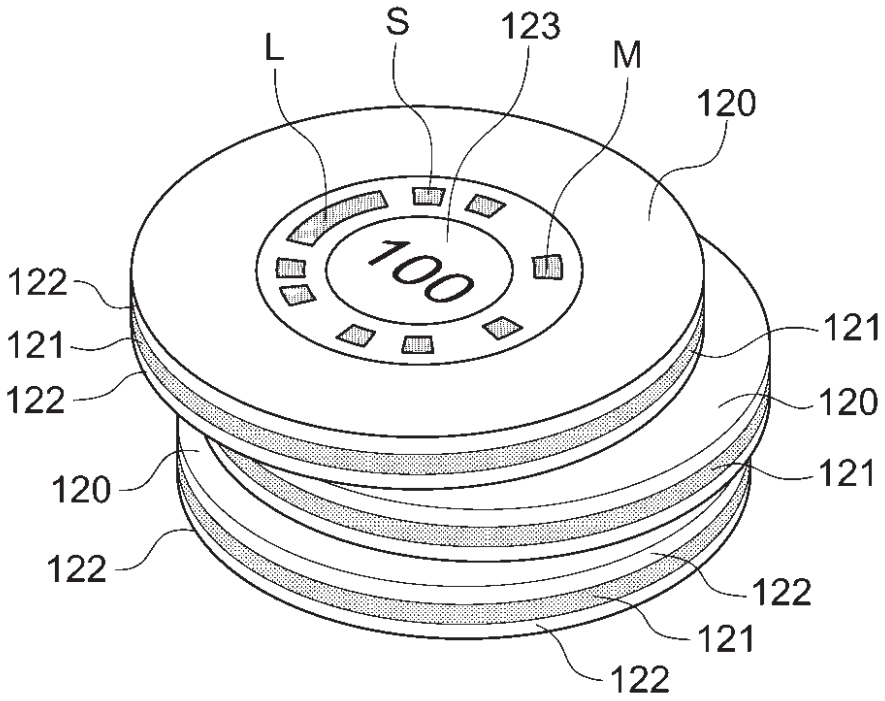

Fig.12

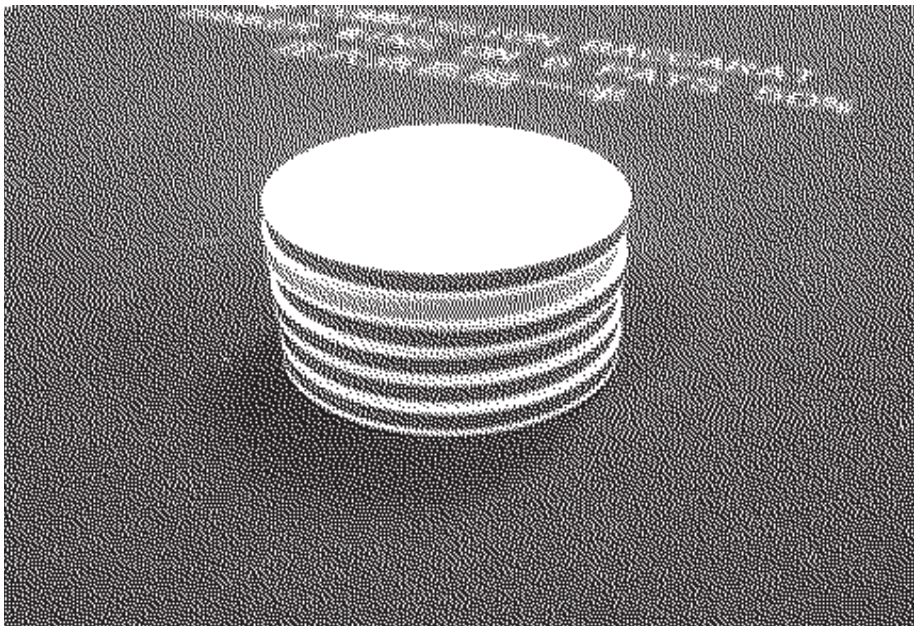

Fig.13A

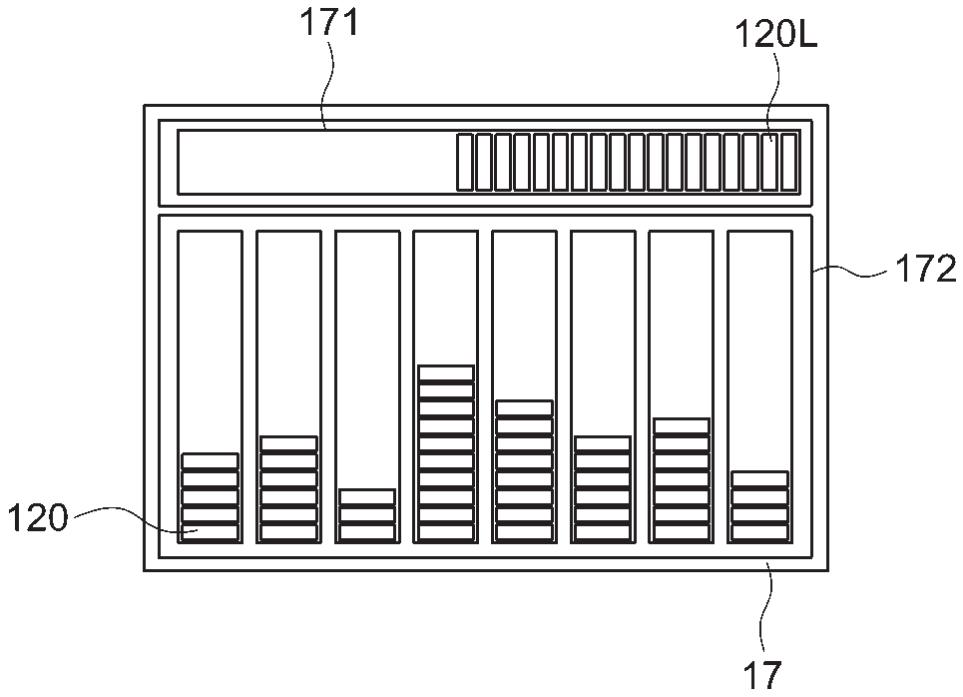

Fig.13B

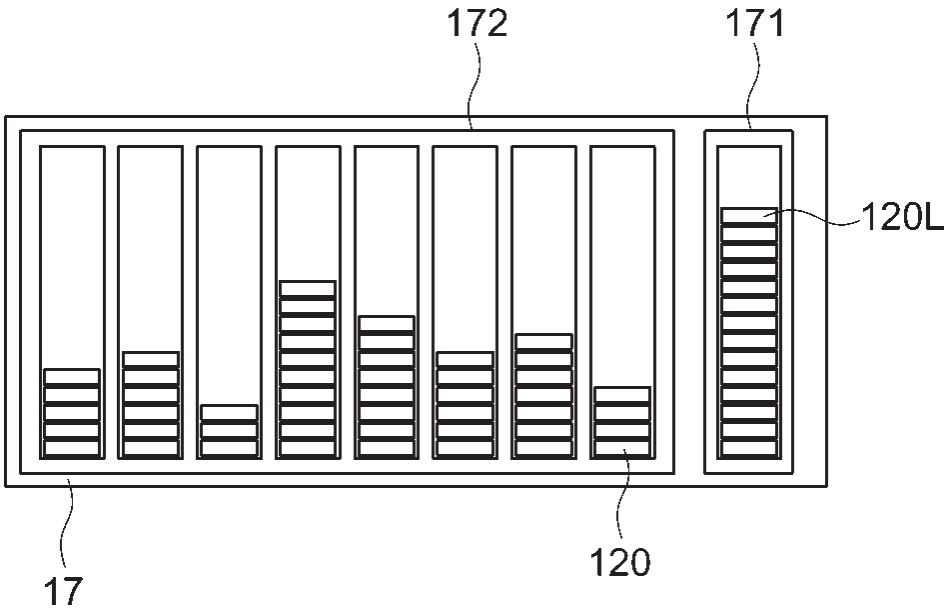

Fig.14A

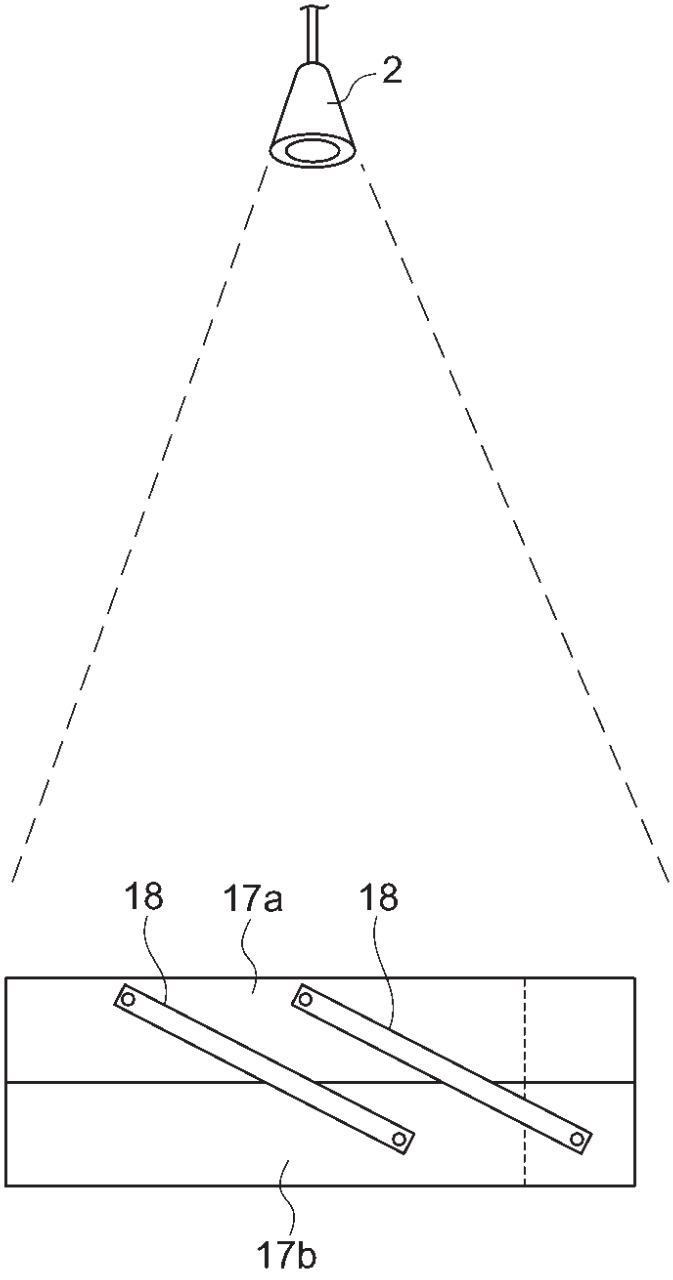

Fig.14B

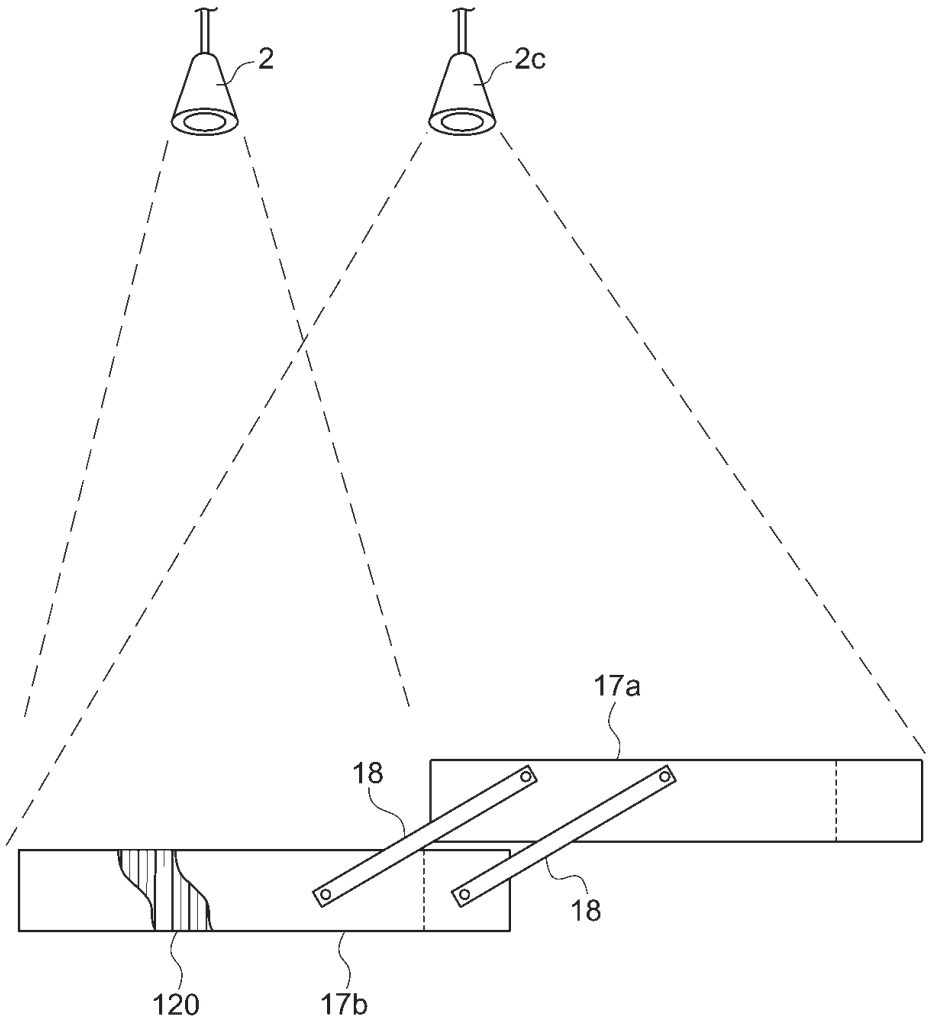

Fig.15

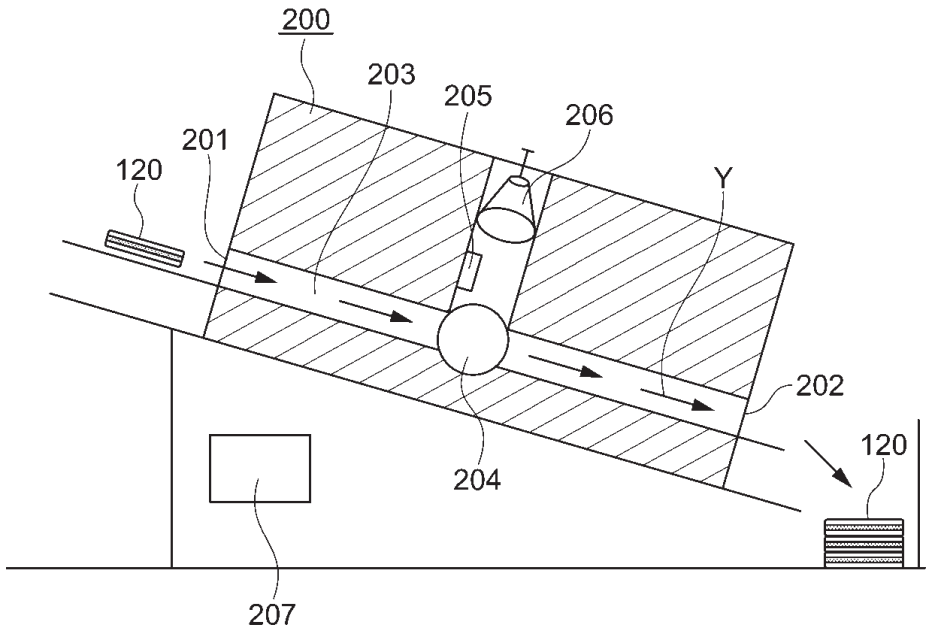

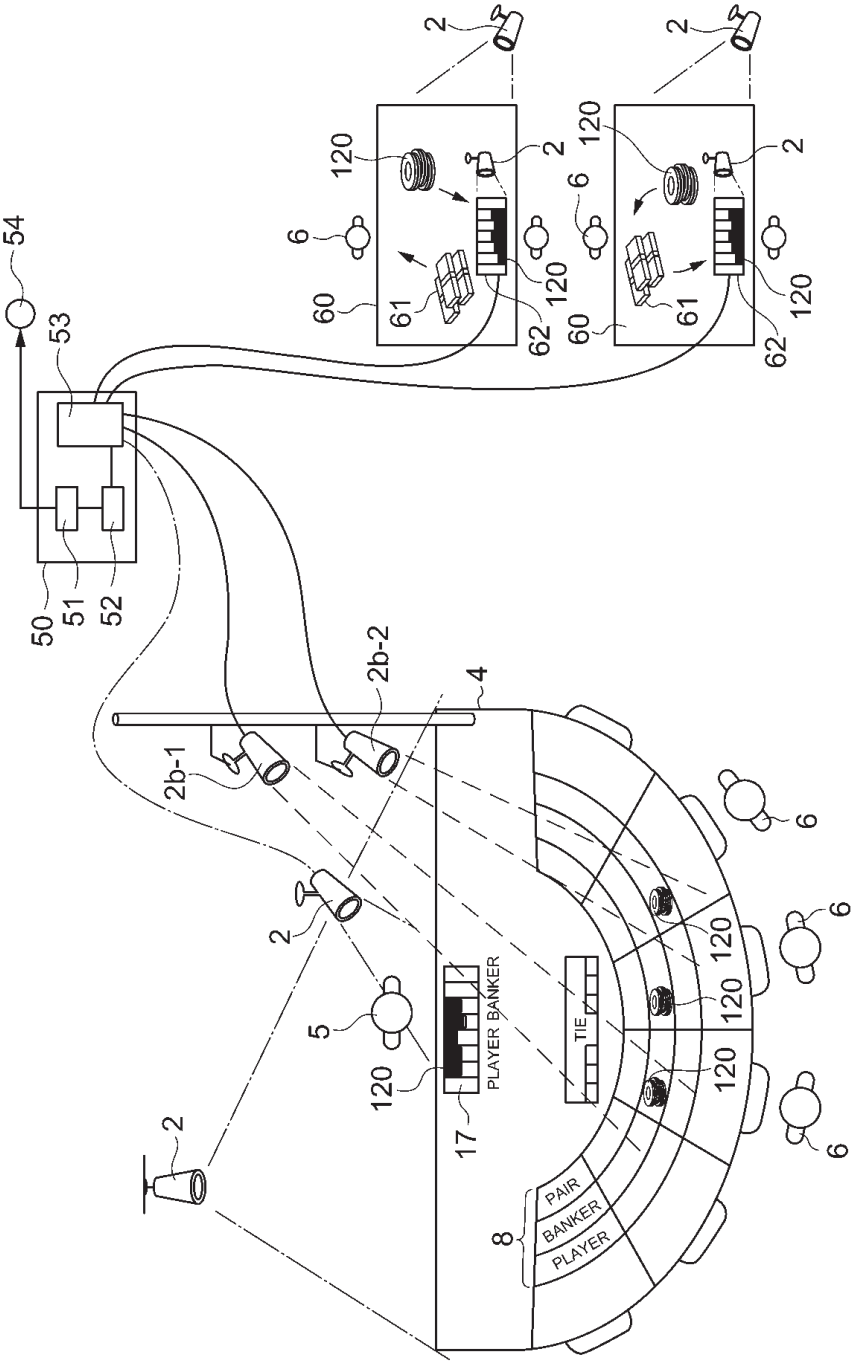
54
53
50
51
52
2b-1
2b-2
4
2
5
120
17
PLAYER
BANKER
TIE
8
PAIR
BANKER
PLAYER
6
60
61
62

Fig.16

Fig.17

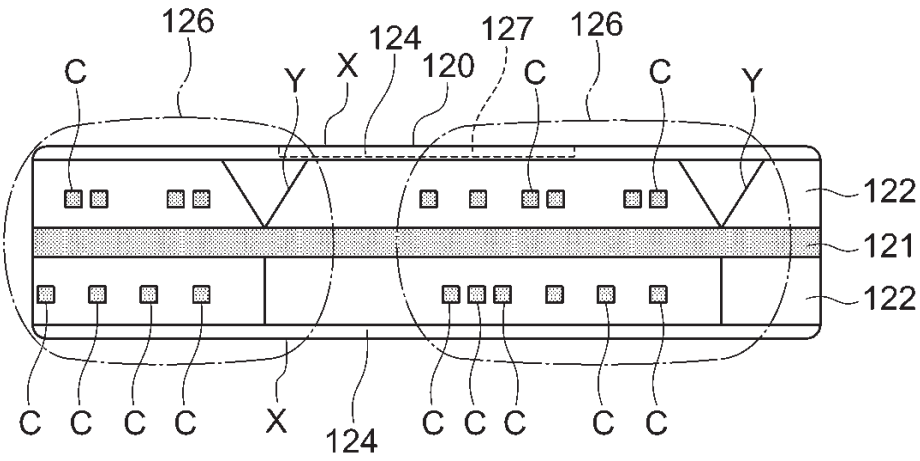

Fig.18

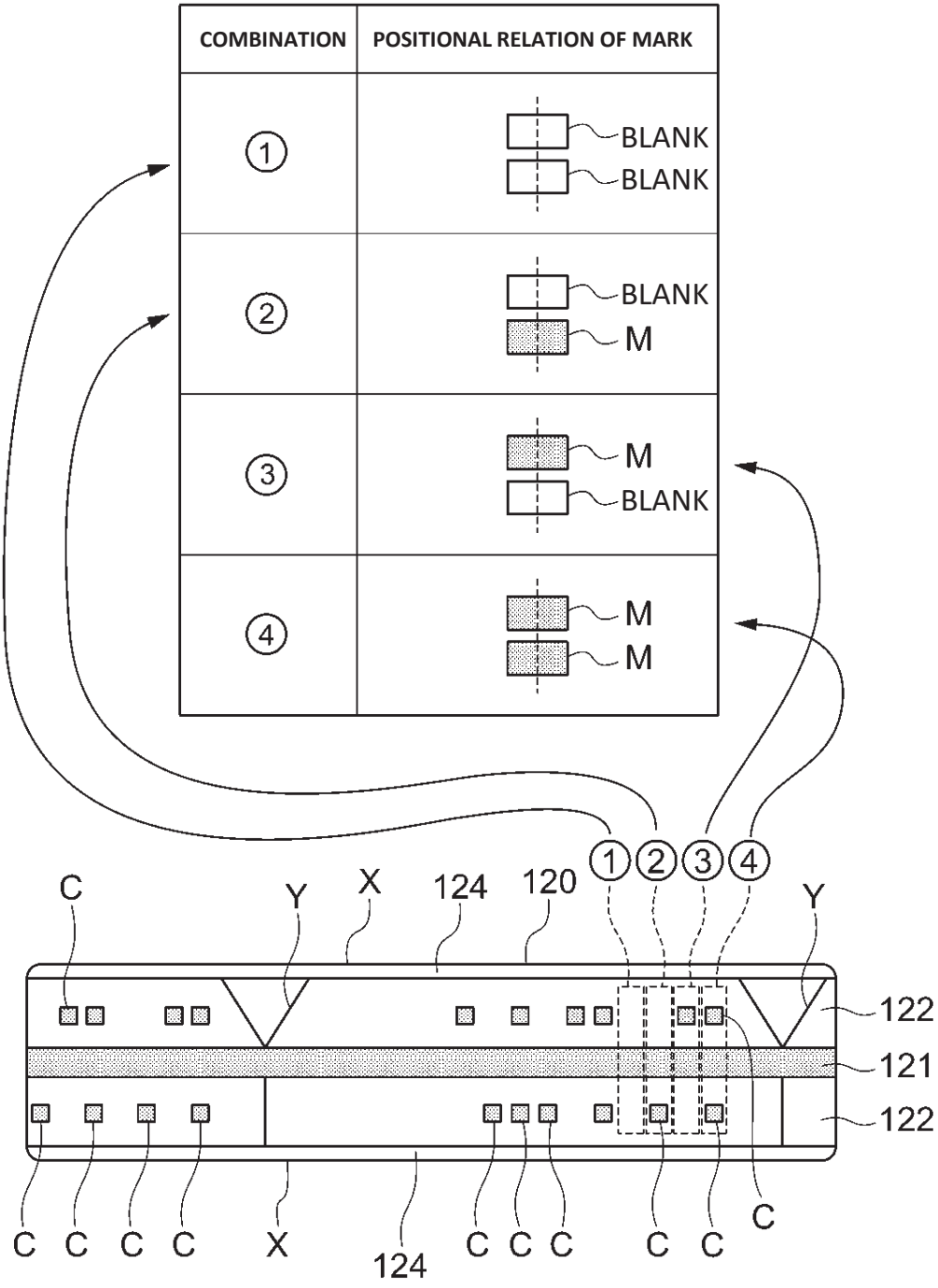
COMBINATION
POSITIONAL RELATION OF MARK
①
BLANK
BLANK
②
BLANK
M
③
M
BLANK
④
M
M
① ② ③ ④
C
Y
X
124
120
Y
122
121
122
C C C C X 124 C C C C C C

Fig.19

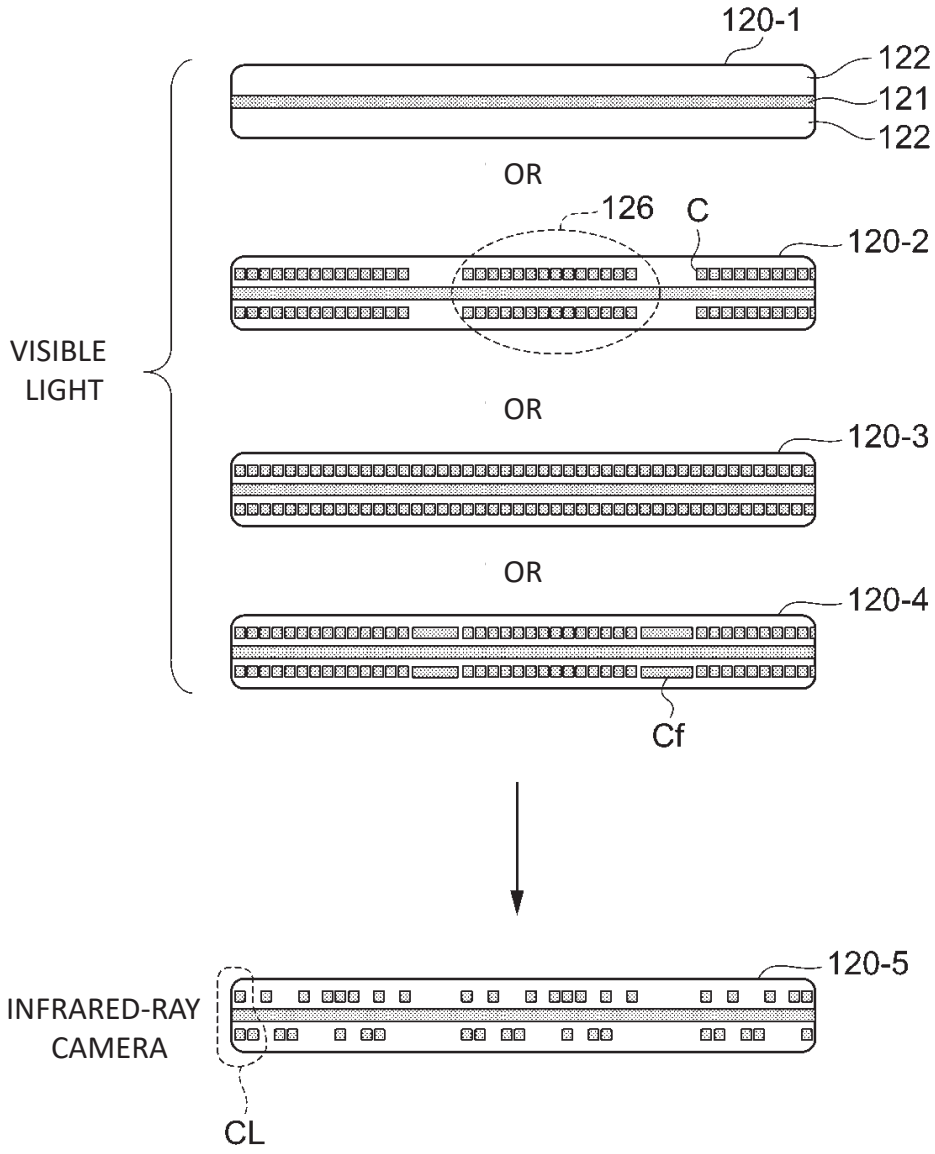
120-1
122
121
122
OR
126
C
120-2
VISIBLE
LIGHT
OR
120-3
OR
120-4
Cf
120-5
INFRARED-RAY
CAMERA
CL

Fig.20A

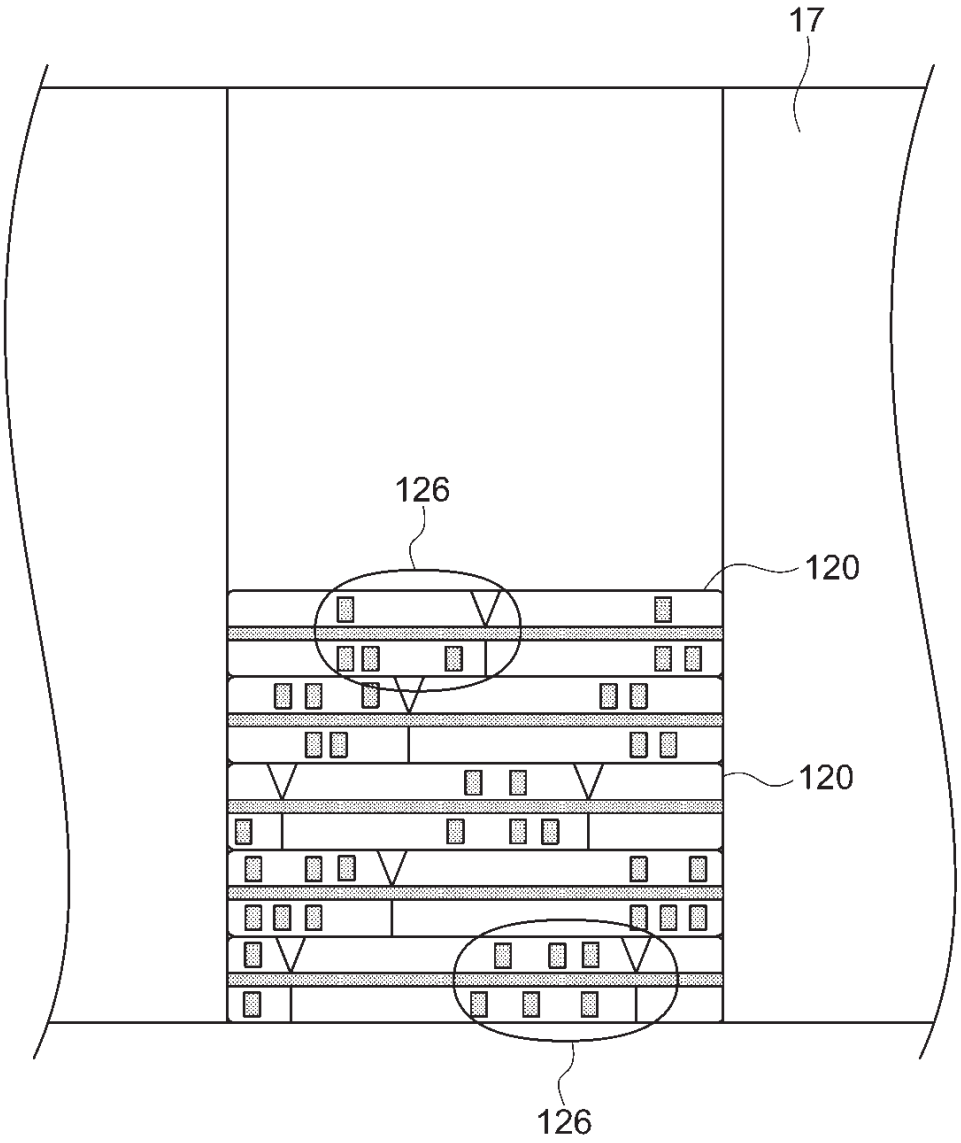

Fig.20B

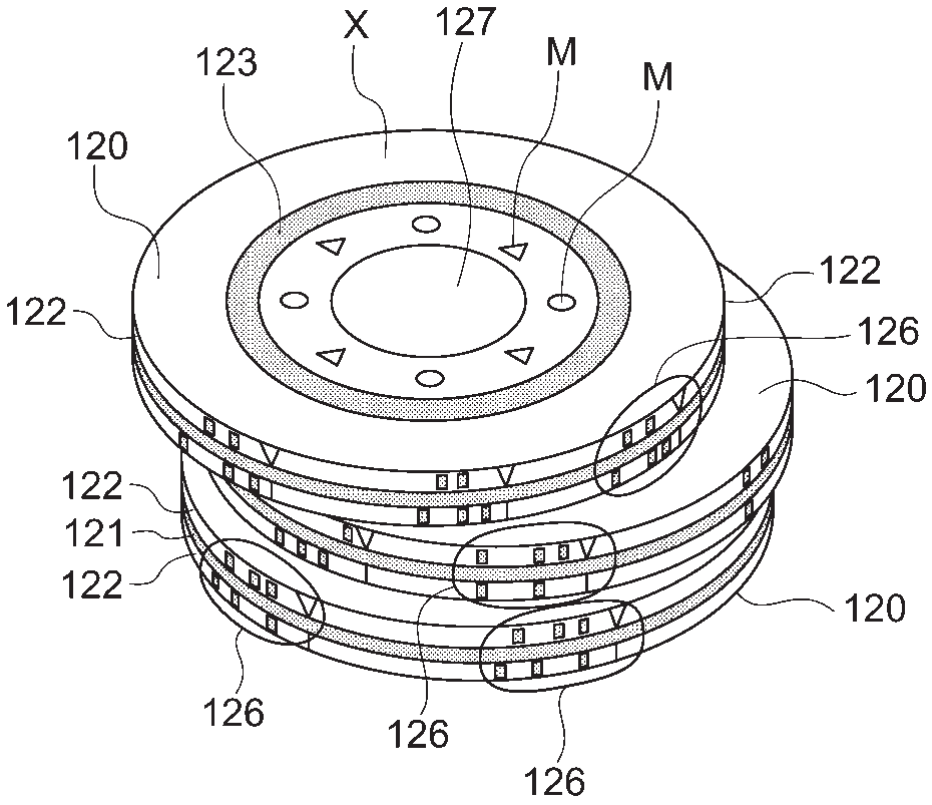

Fig.21

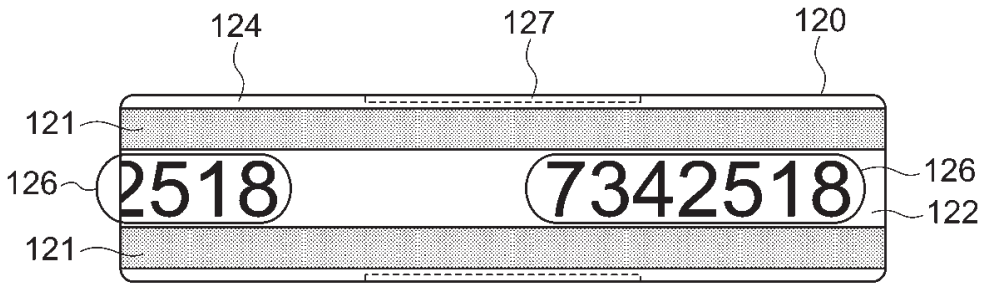

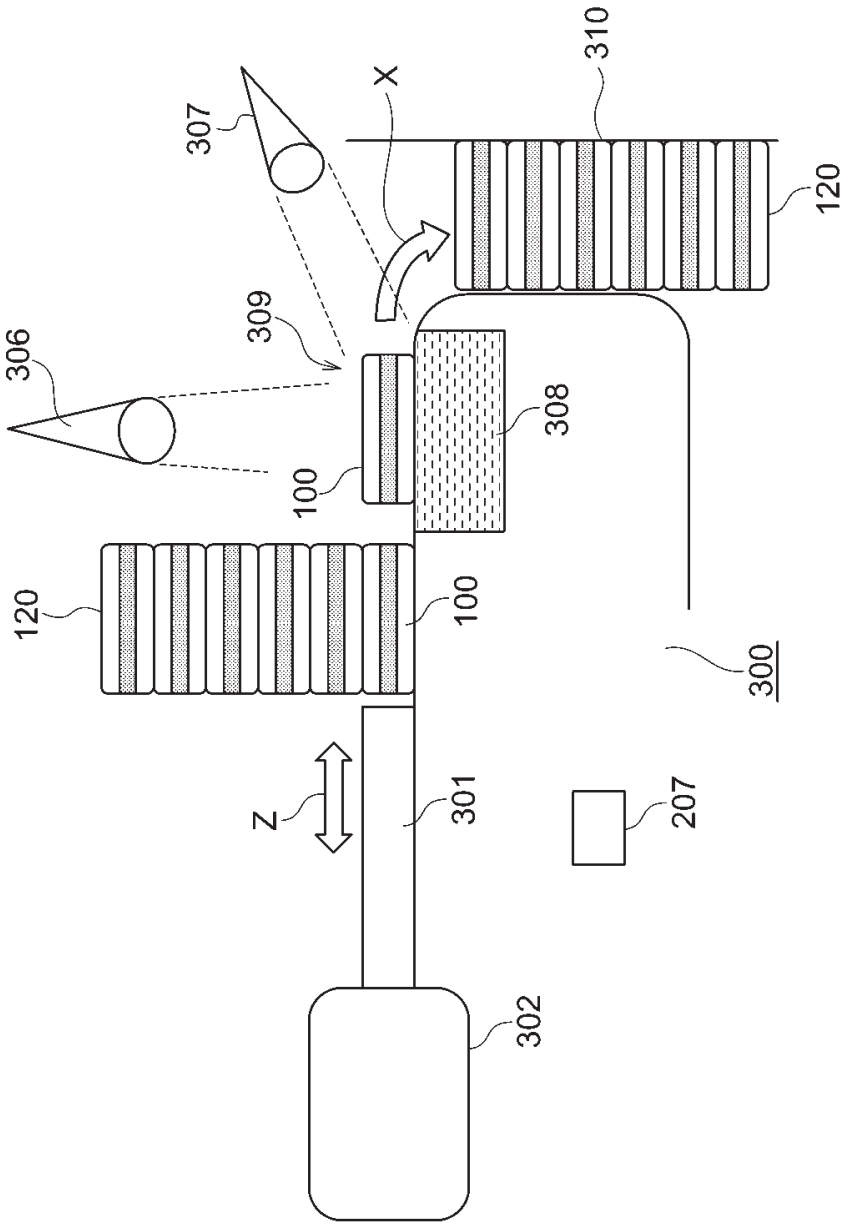

Fig.22

Fig.23

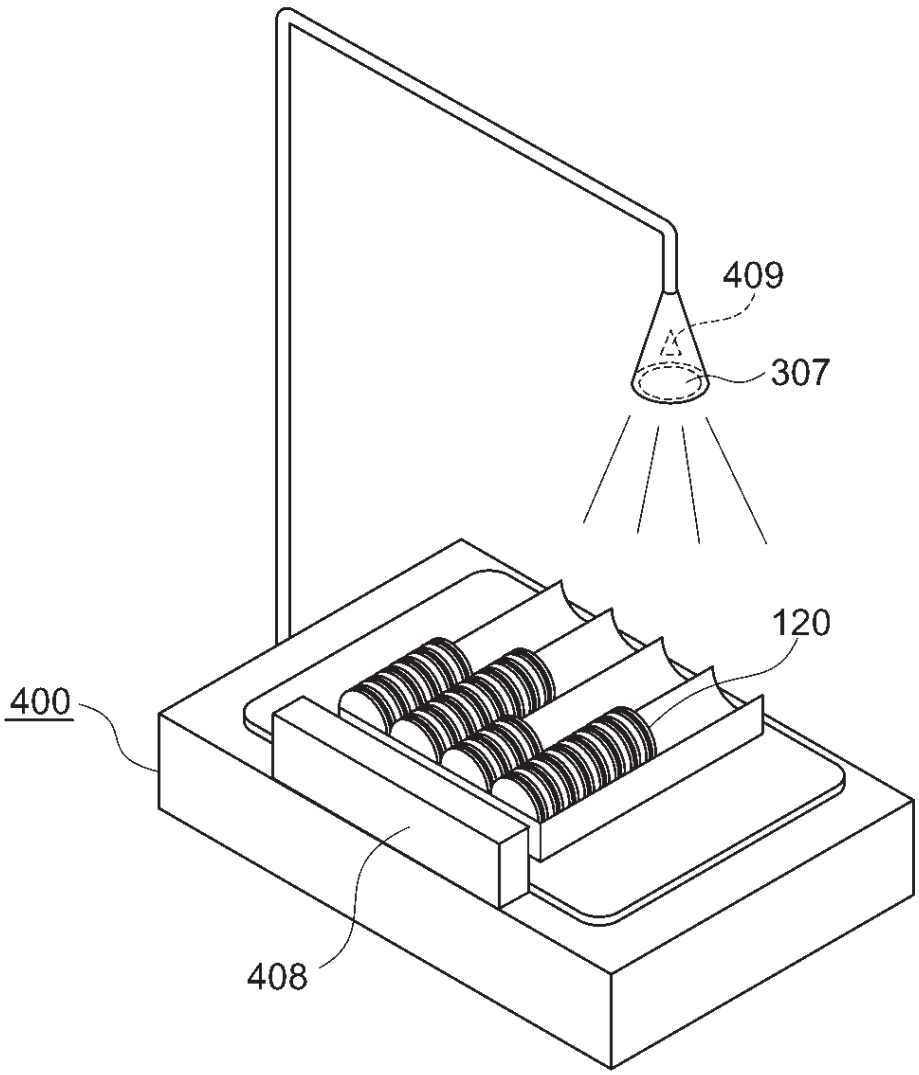

Fig.24

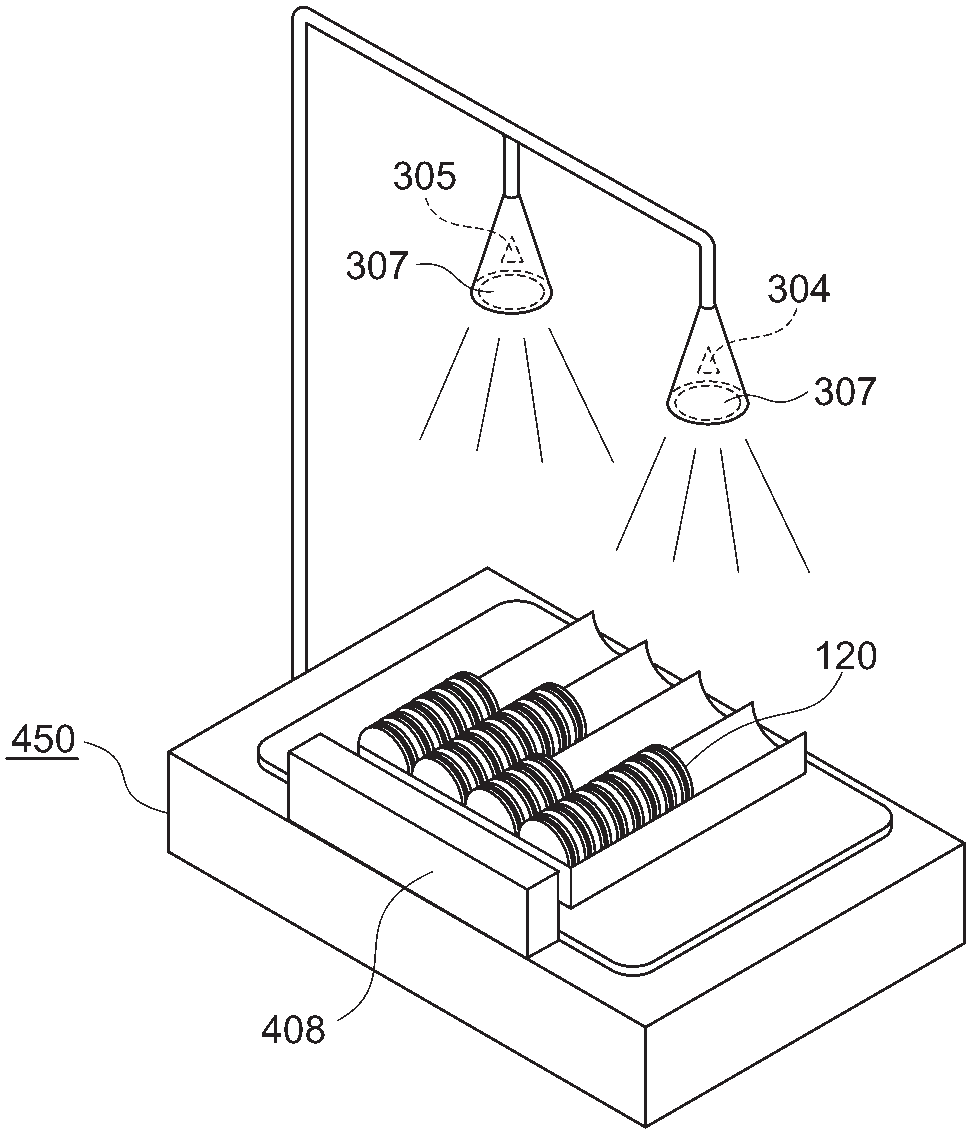

Fig.25

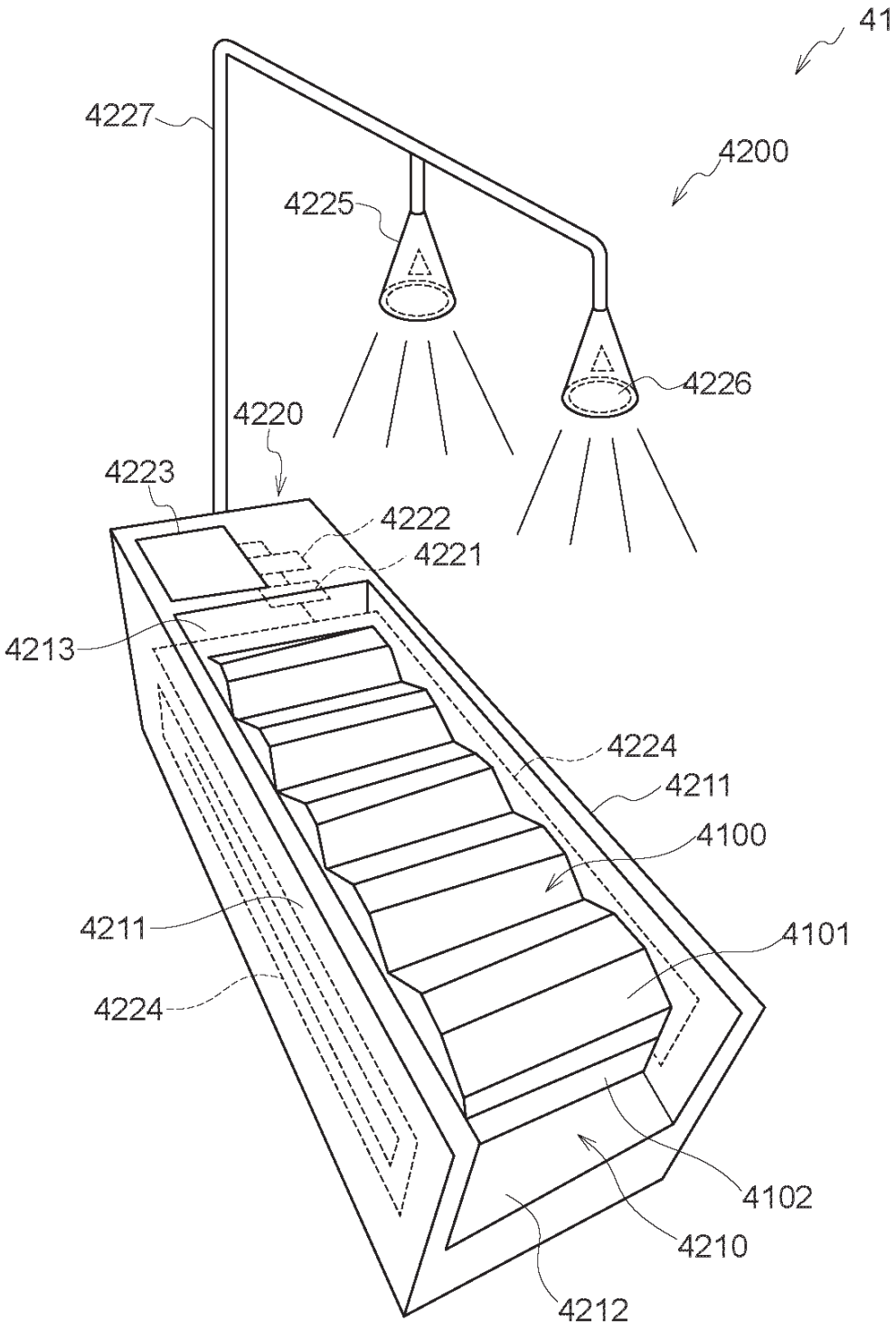
41
4227
4200
4225
4226
4220
4223
4222
4221
4213
4224
4211
4100
4211
4101
4224
4102
4210
4212

Fig.26

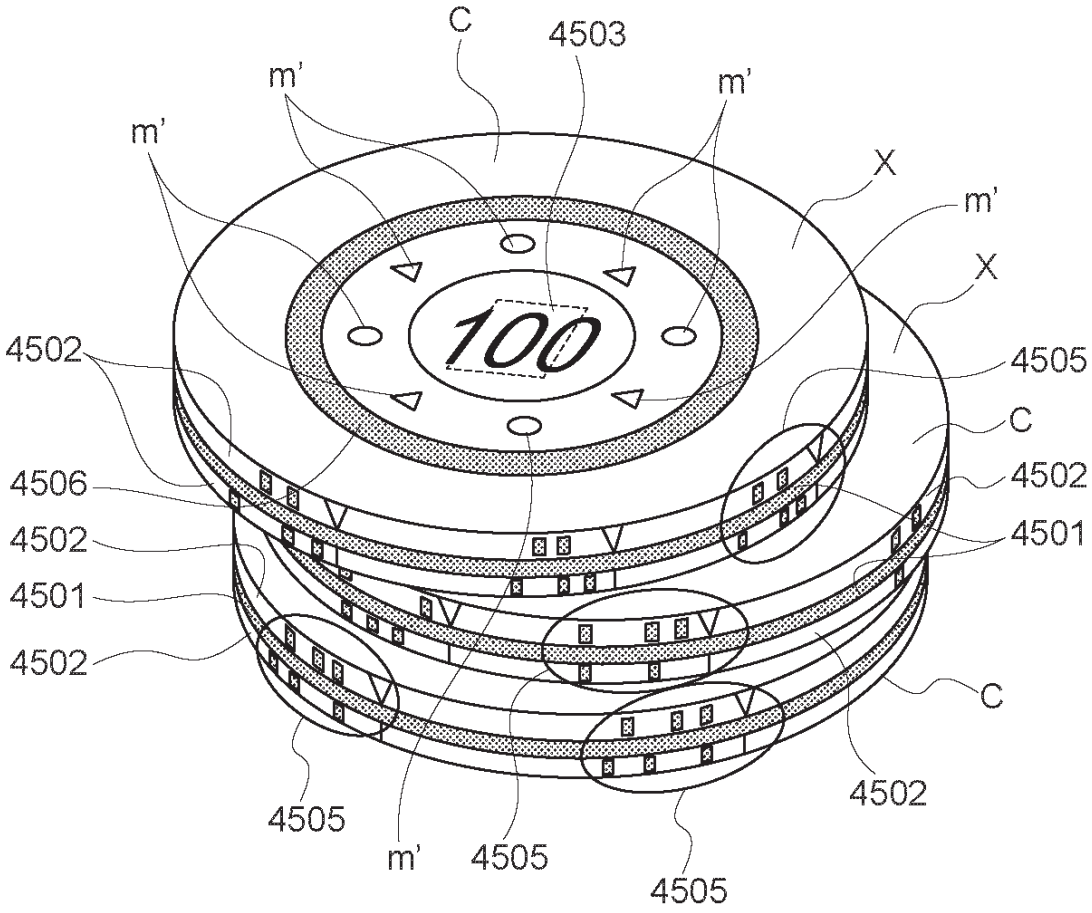
C
4503
m'
m'
m'
X
m'
X
100
4502
4505
C
4506
4502
4502
4501
4501
4502
C
4505
m'
4505
4505
4502

Fig.27

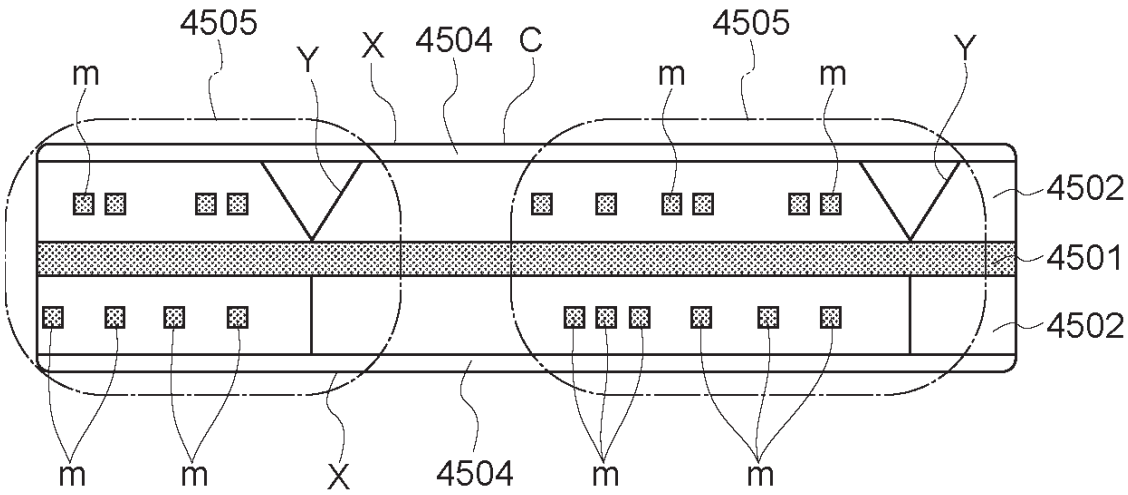

Fig.28

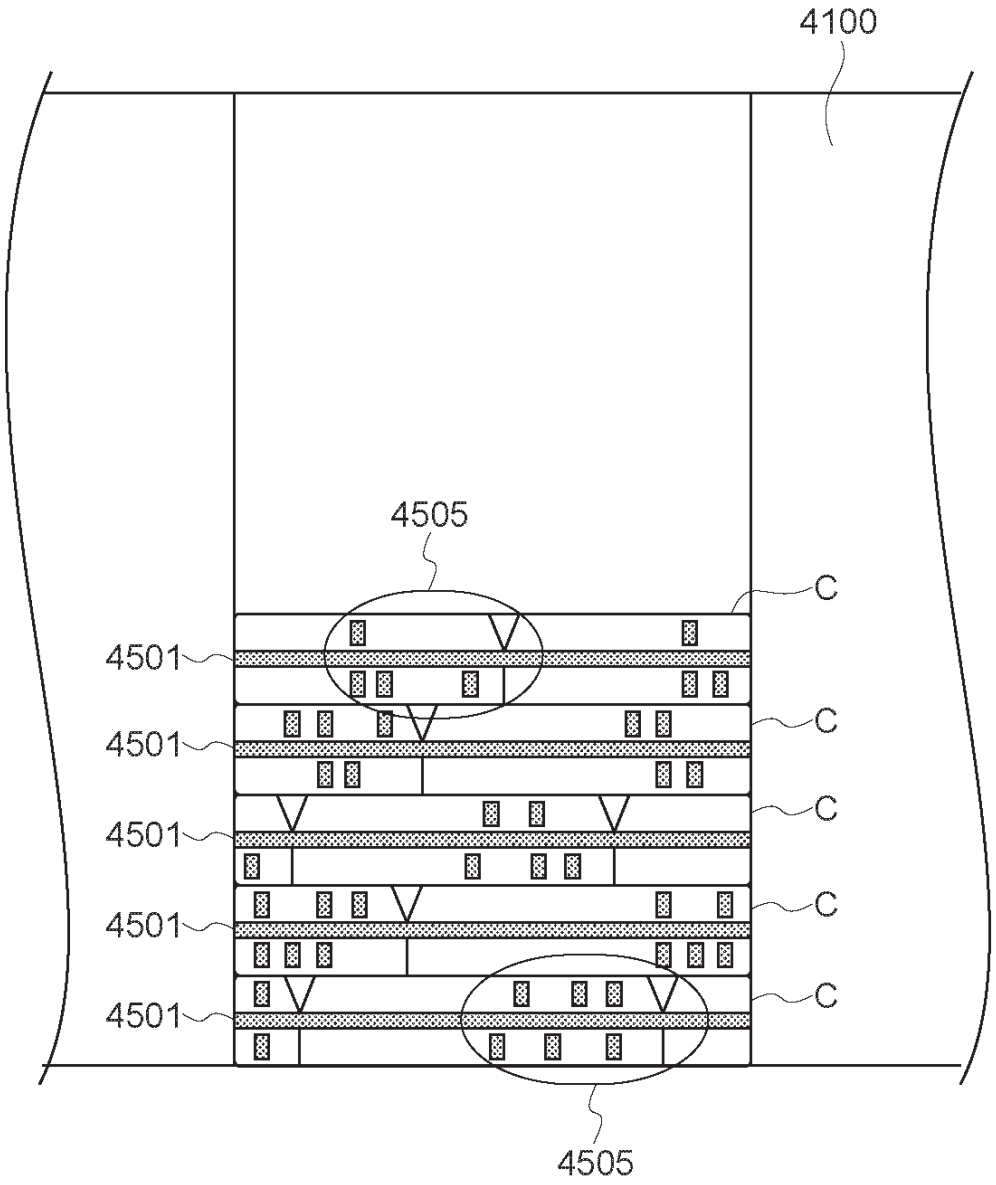

Fig.29

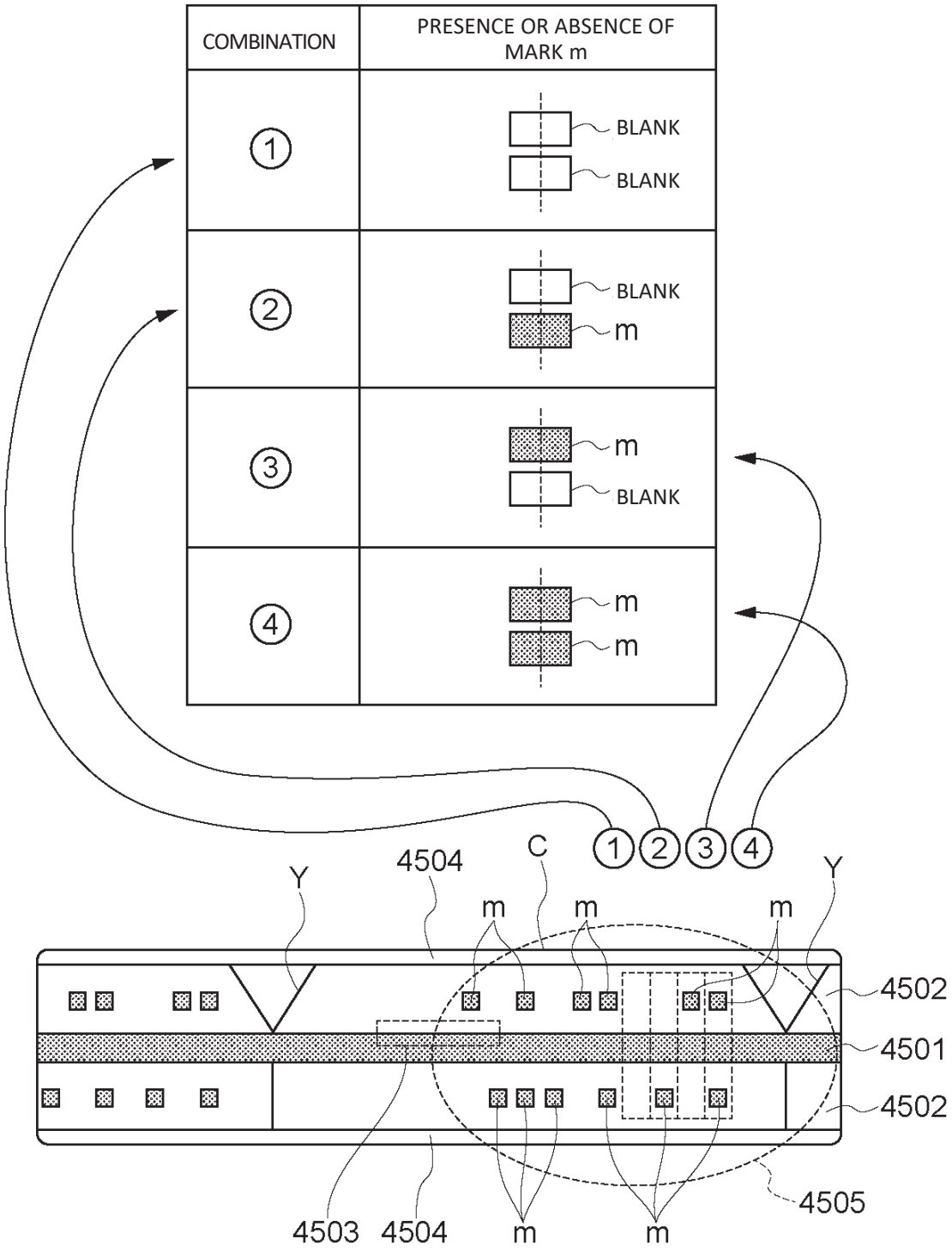
COMBINATION
PRESENCE OR ABSENCE OF MARK m
1
BLANK
BLANK
2
BLANK
m
3
m
BLANK
4
m
m
1 2 3 4
Y
4504
C
m
m
m
Y
4502
4501
4502
4505
4503
4504
m
m

Fig.30

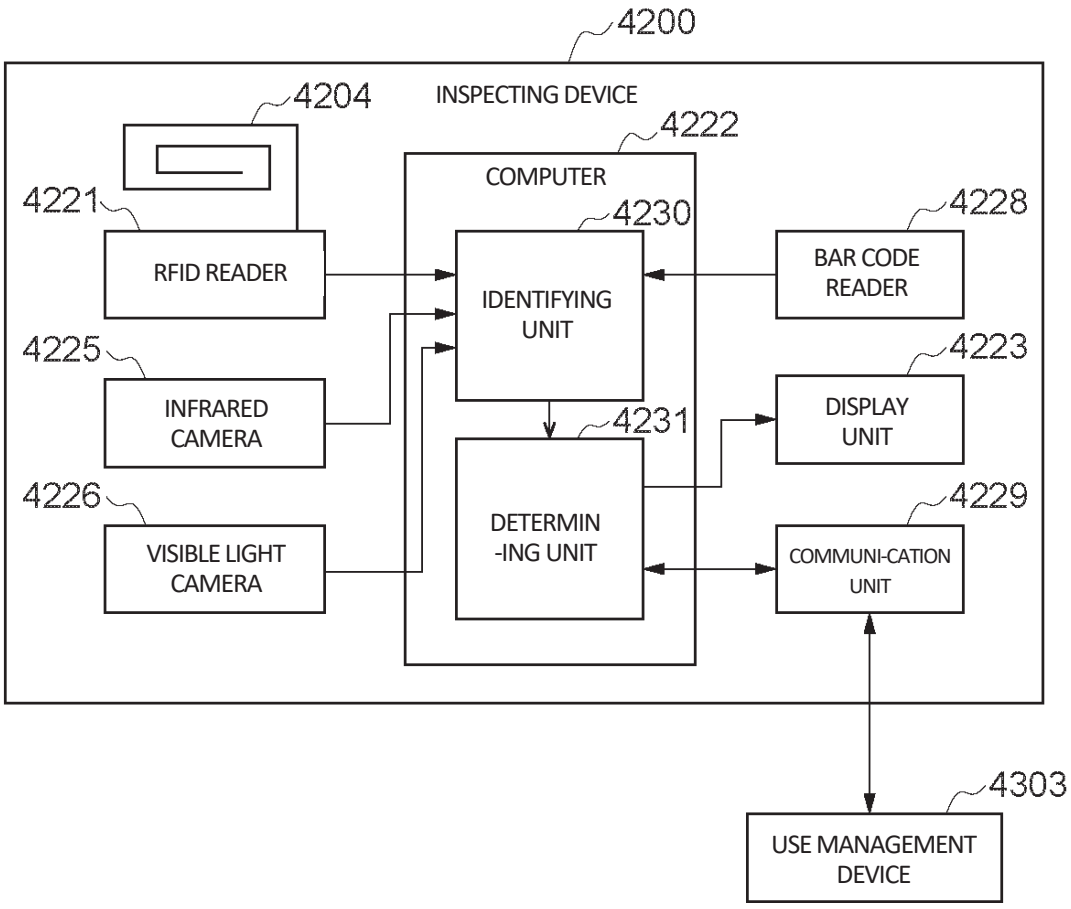
4200
INSPECTING DEVICE
4204
4222
COMPUTER
4221
4230
4228
RFID READER
IDENTIFYING UNIT
BAR CODE READER
4225
4223
INFRARED CAMERA
DISPLAY UNIT
4231
4226
4229
VISIBLE LIGHT CAMERA
DETERMIN -ING UNIT
COMMUNI-CATION UNIT
4303
USE MANAGEMENT DEVICE

Fig.31

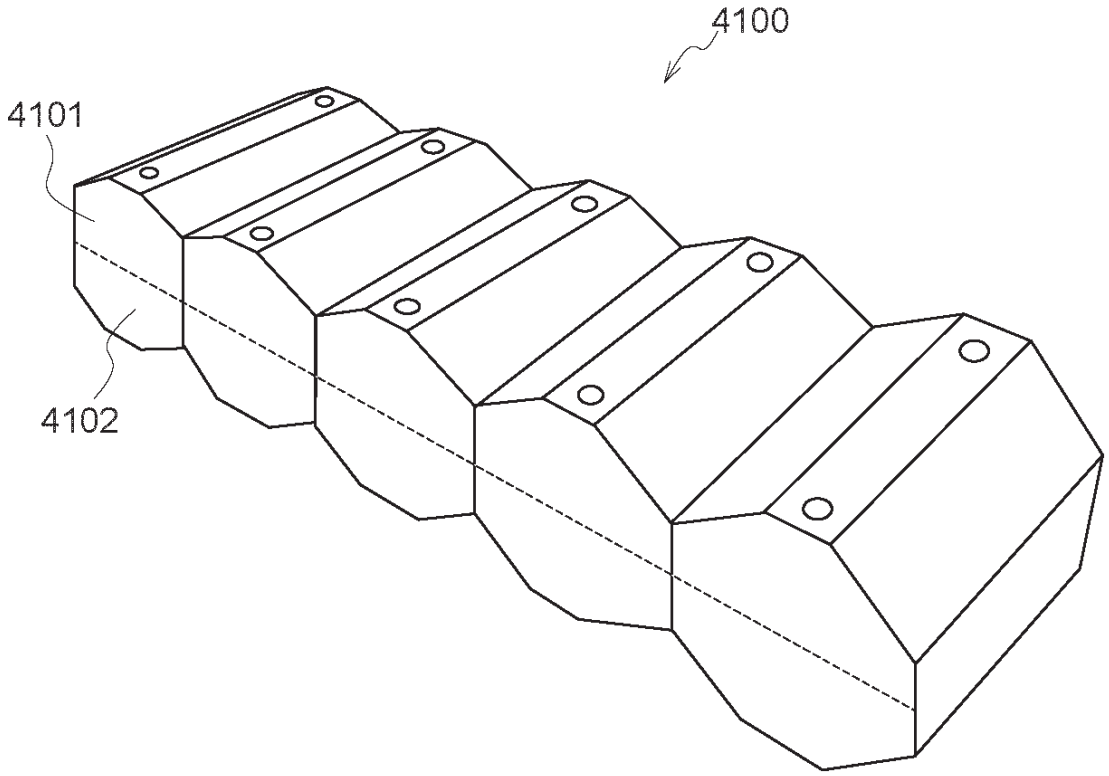

Fig.32

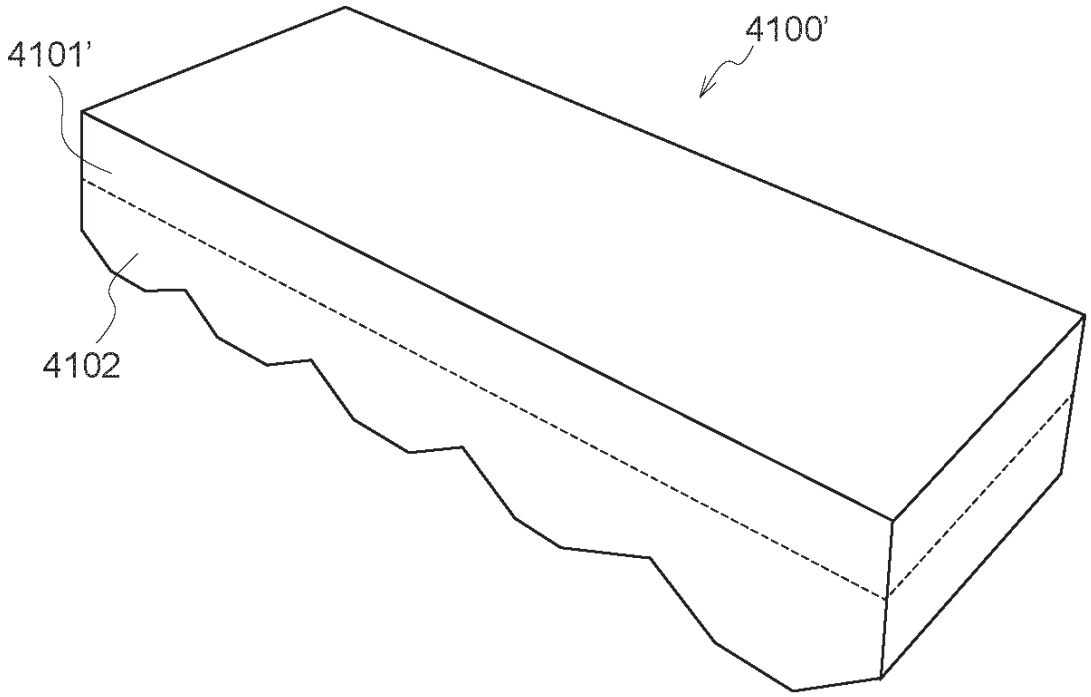

Fig.33

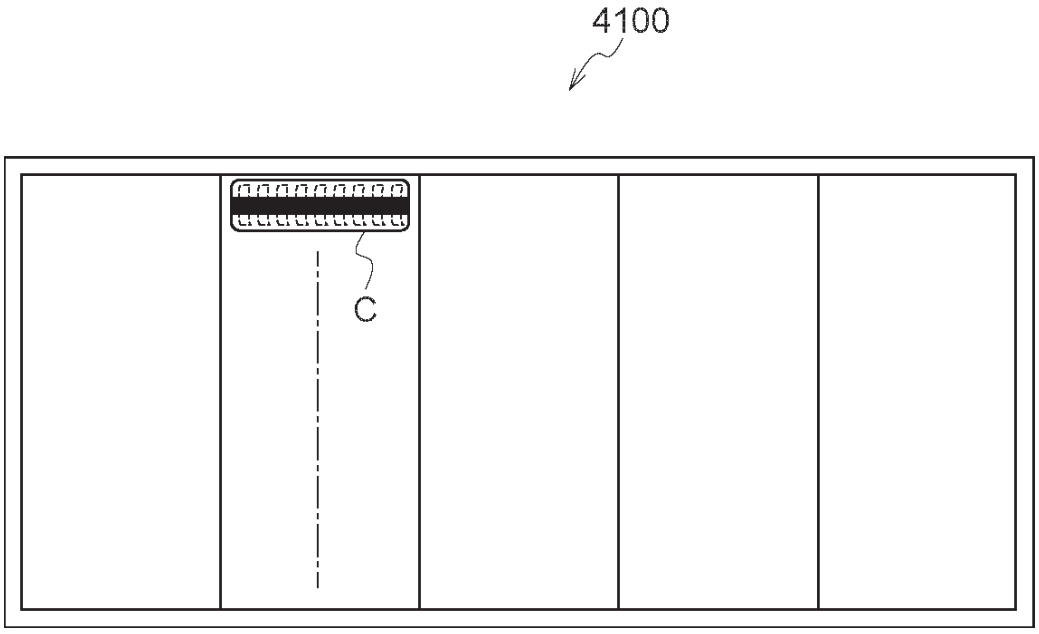

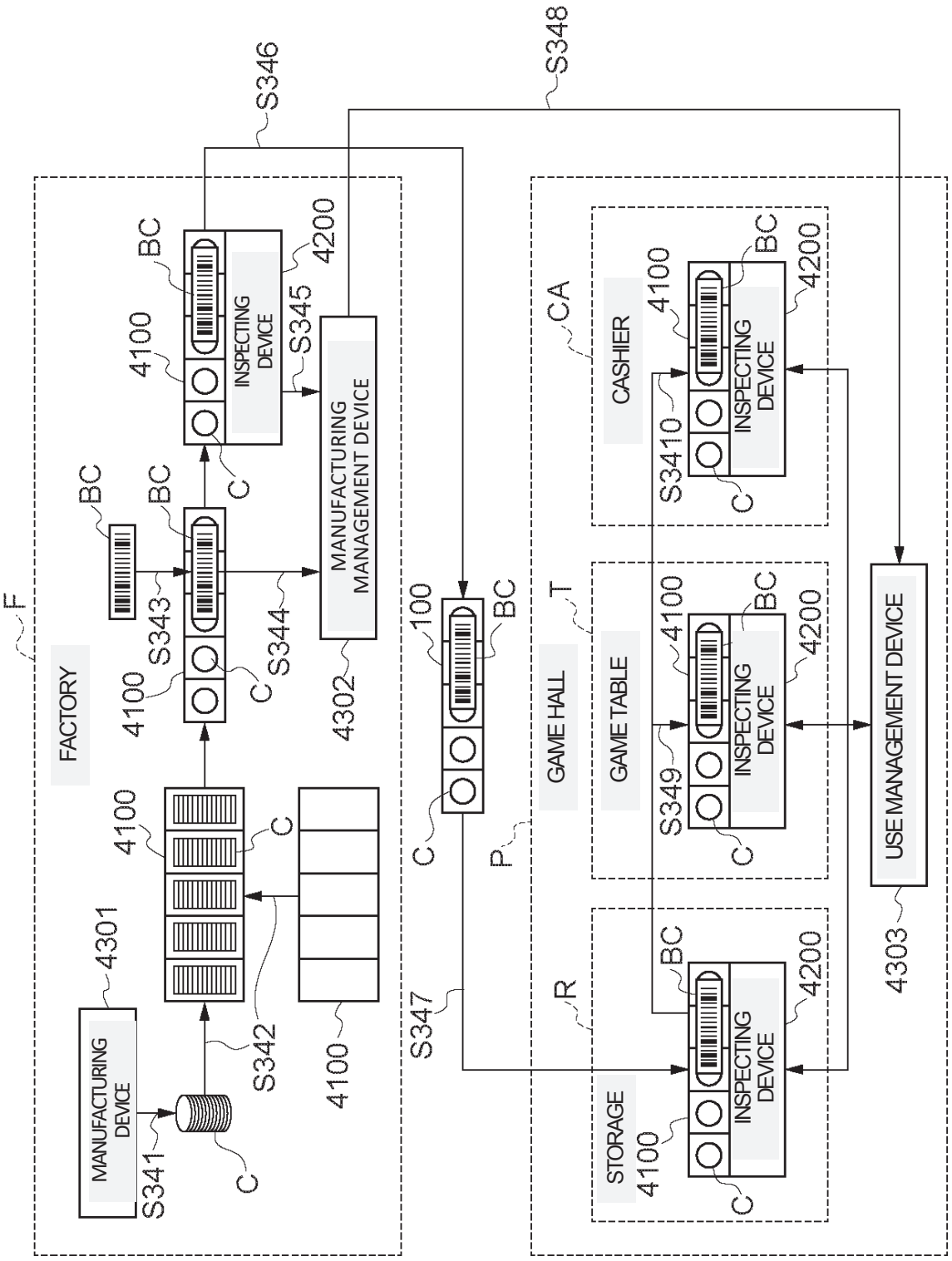
F
FACTORY
MANUFACTURING DEVICE
4301
S341
C
S342
4100
C
4100
S343
BC
BC
4100
C
S344
MANUFACTURING MANAGEMENT DEVICE
4302
S345
INSPECTING DEVICE
4200
BC
4100
C
S346
S347
100
BC
C
P
S348
GAME HALL
T
GAME TABLE
CA
CASHIER
R
STORAGE
S349
S3410
INSPECTING DEVICE
4100
4200
BC
C
USE MANAGEMENT DEVICE
4303

Fig.34

Fig.35

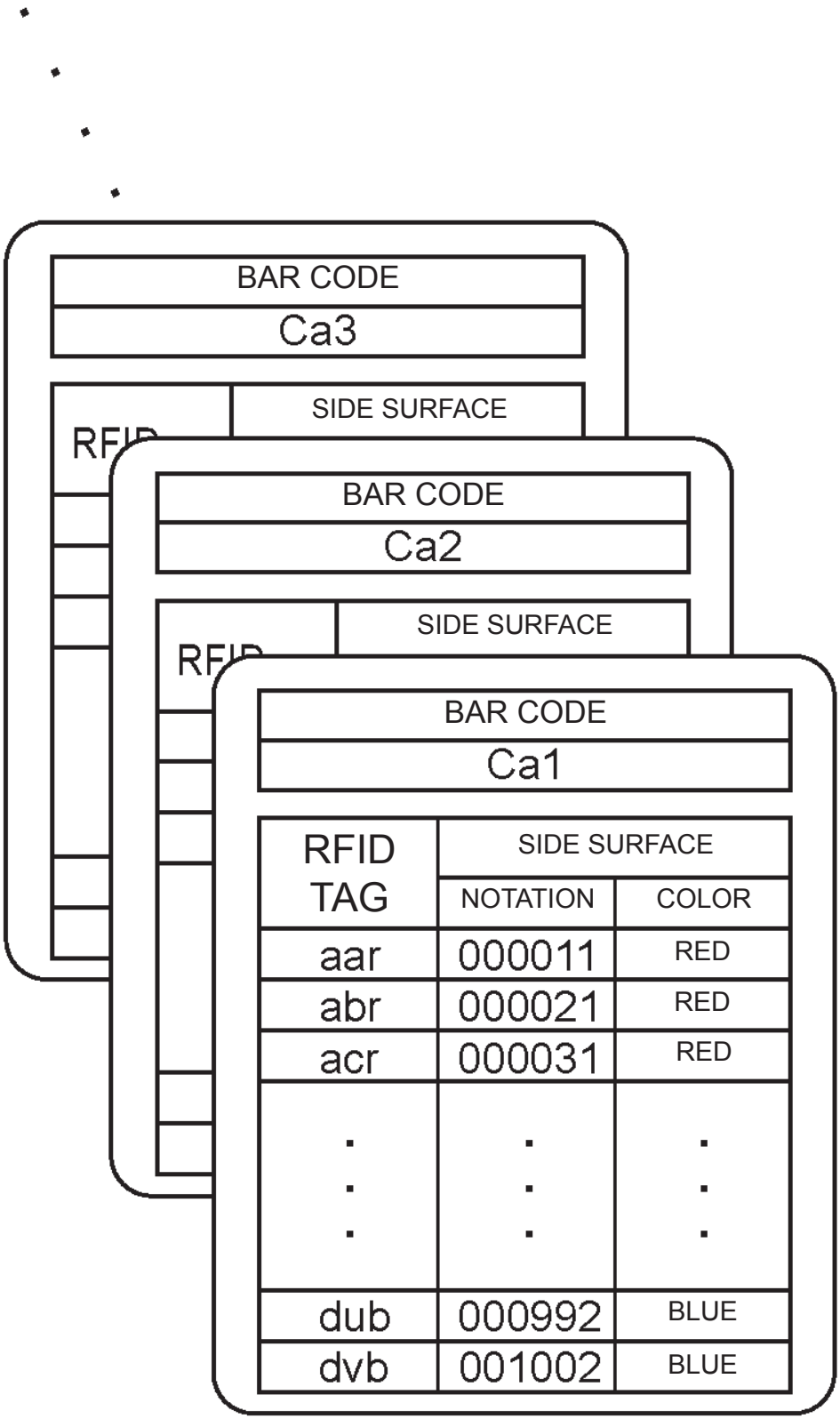
BAR CODE
Ca3
SIDE SURFACE
BAR CODE
Ca2
SIDE SURFACE
BAR CODE
Ca1
RFID TAG
SIDE SURFACE
NOTATION
COLOR
aar
000011
RED
abr
000021
RED
acr
000031
RED
dub
000992
BLUE
dvb
001002
BLUE

Fig.36

BAR CODE READER
Ca1

RFID READER
bwg
dkg
amr
.
.
.
bbr
cjb

INFRARED CAMERA
000011
000021
000031
.
.
.
000992
001002

VISIBLE LIGHT CAMERA
RED
RED
RED
.
.
.
BLUE
BLUE

Fig.37

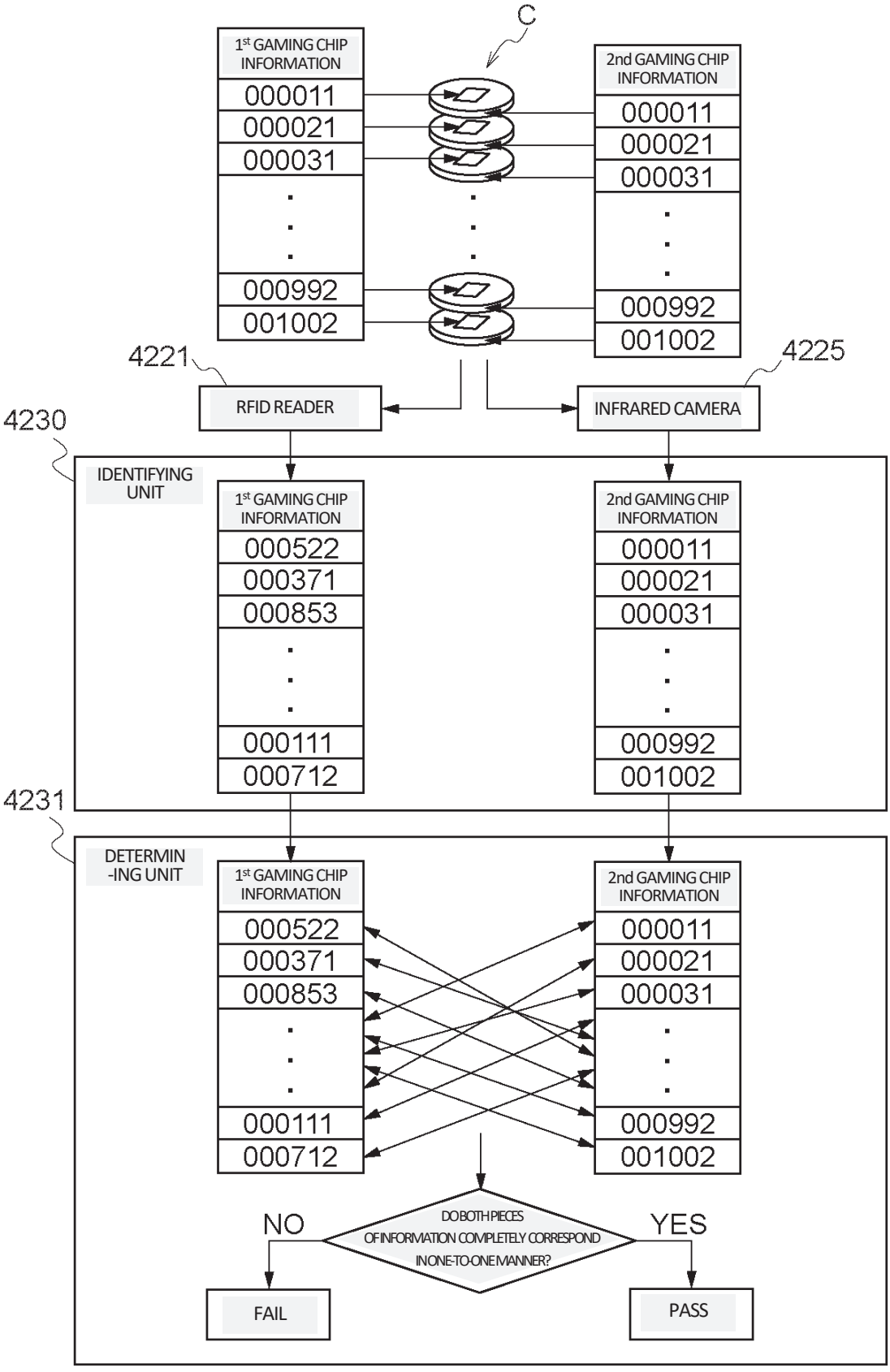
C
1st GAMING CHIP INFORMATION
000011
000021
000031
000992
001002
2nd GAMING CHIP INFORMATION
000011
000021
000031
000992
001002
4221
RFID READER
4225
INFRARED CAMERA
4230
IDENTIFYING UNIT
1st GAMING CHIP INFORMATION
000522
000371
000853
000111
000712
2nd GAMING CHIP INFORMATION
000011
000021
000031
000992
001002
4231
DETERMIN -ING UNIT
1st GAMING CHIP INFORMATION
000522
000371
000853
000111
000712
2nd GAMING CHIP INFORMATION
000011
000021
000031
000992
001002
NO
DO BOTH PIECES OF INFORMATION COMPLETELY CORRESPOND IN ONE-TO-ONE MANNER?
YES
FAIL
PASS

Fig.38

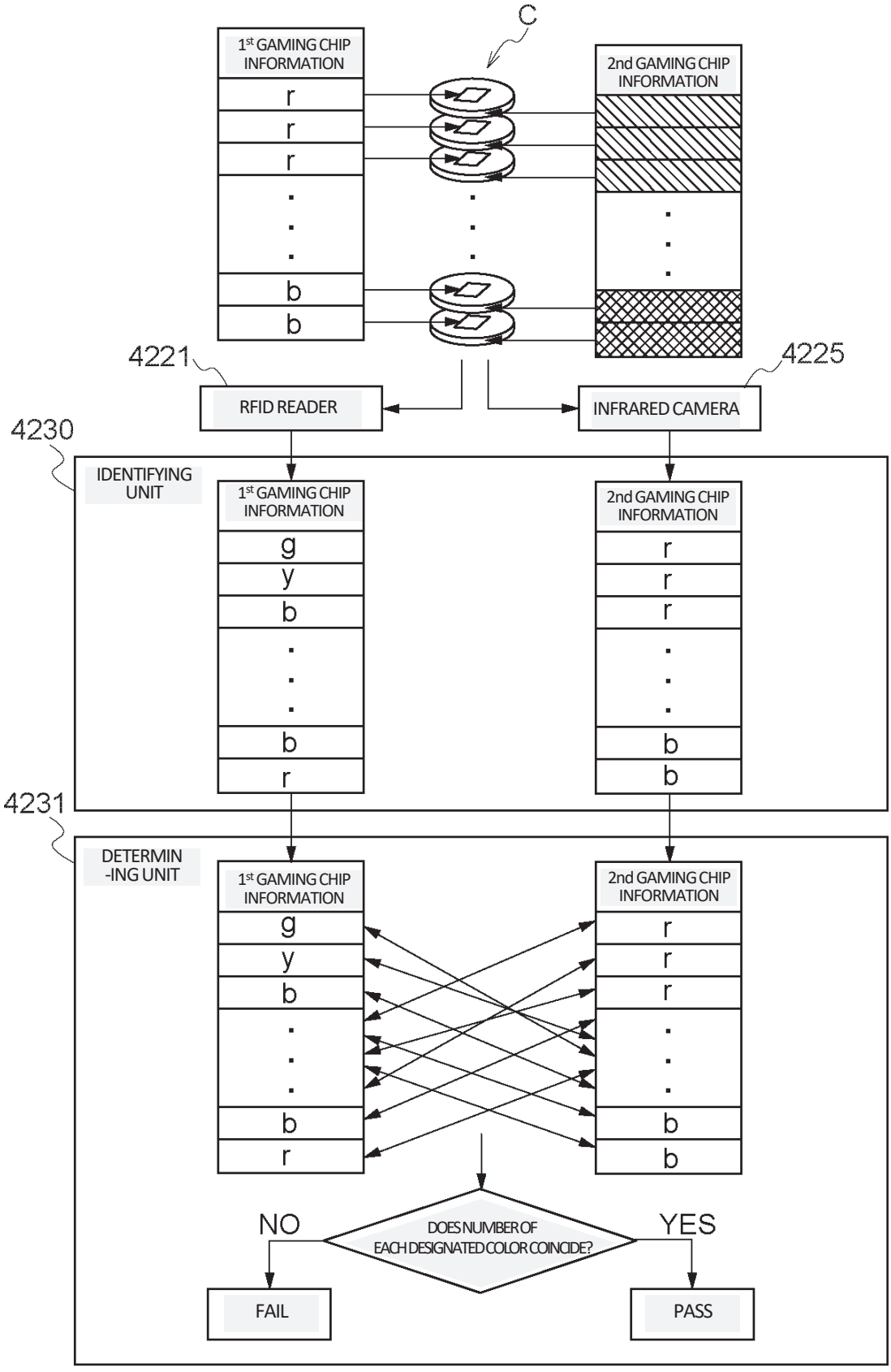
C
1st GAMING CHIP INFORMATION
r
r
r
b
b
2nd GAMING CHIP INFORMATION
4221
RFID READER
4225
INFRARED CAMERA
4230
IDENTIFYING UNIT
1st GAMING CHIP INFORMATION
g
y
b
b
r
2nd GAMING CHIP INFORMATION
r
r
r
b
b
4231
DETERMIN -ING UNIT
1st GAMING CHIP INFORMATION
g
y
b
b
r
2nd GAMING CHIP INFORMATION
r
r
r
b
b
NO
DOES NUMBER OF EACH DESIGNATED COLOR COINCIDE?
YES
FAIL
PASS

Fig.39

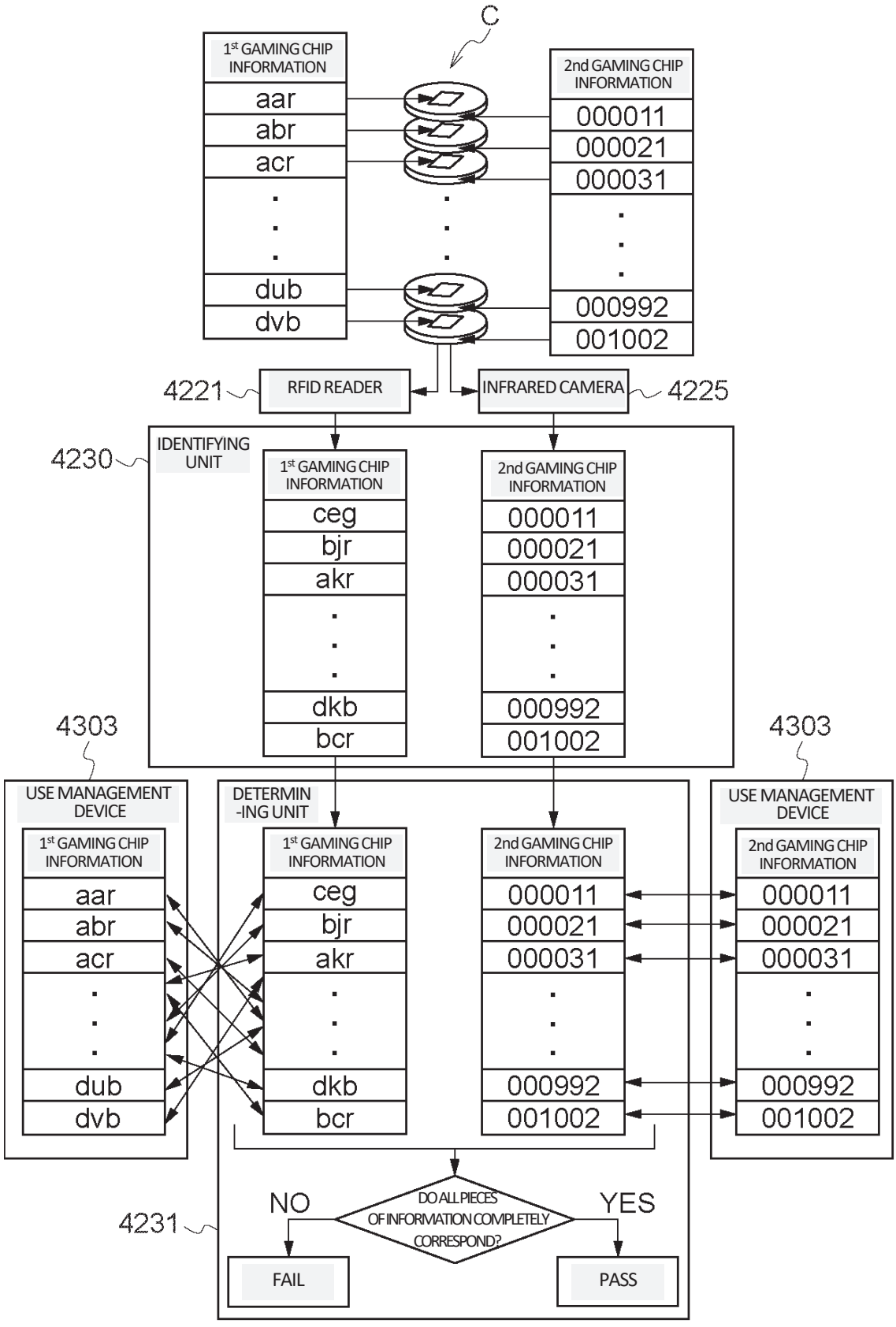
C
1st GAMING CHIP INFORMATION
aar
abr
acr
dub
dvb
2nd GAMING CHIP INFORMATION
000011
000021
000031
000992
001002
4221
RFID READER
INFRARED CAMERA
4225
4230
IDENTIFYING UNIT
1st GAMING CHIP INFORMATION
ceg
bjr
akr
dkb
bcr
2nd GAMING CHIP INFORMATION
000011
000021
000031
000992
001002
4303
USE MANAGEMENT DEVICE
1st GAMING CHIP INFORMATION
aar
abr
acr
dub
dvb
DETERMIN -ING UNIT
1st GAMING CHIP INFORMATION
ceg
bjr
akr
dkb
bcr
2nd GAMING CHIP INFORMATION
000011
000021
000031
000992
001002
4303
USE MANAGEMENT DEVICE
2nd GAMING CHIP INFORMATION
000011
000021
000031
000992
001002
4231
NO
DO ALL PIECES OF INFORMATION COMPLETELY CORRESPOND?
YES
FAIL
PASS

Fig.40

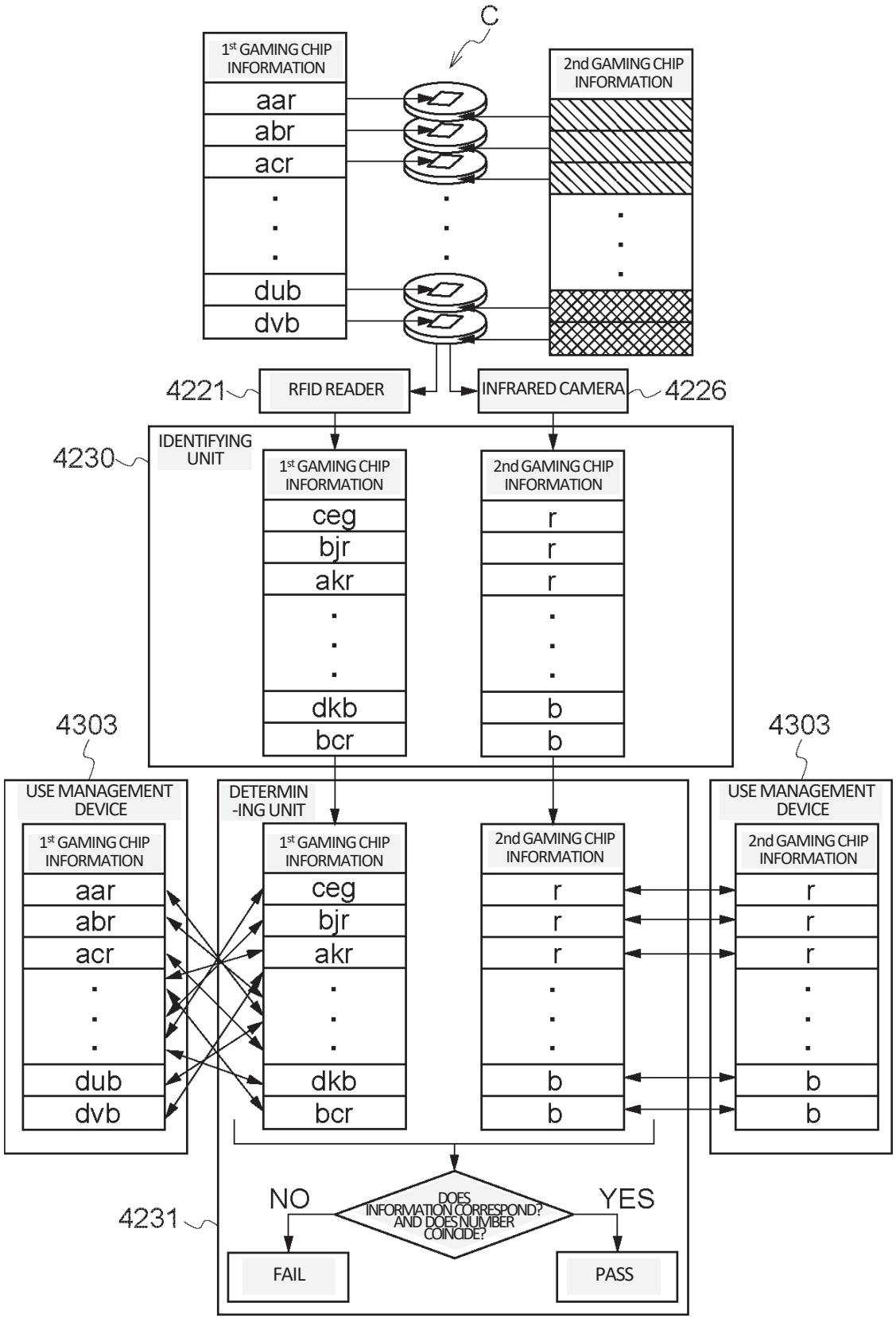
C
1st GAMING CHIP INFORMATION
aar
abr
acr
dub
dvb
2nd GAMING CHIP INFORMATION
4221
RFID READER
INFRARED CAMERA
4226
4230
IDENTIFYING UNIT
1st GAMING CHIP INFORMATION
ceg
bjr
akr
dkb
bcr
2nd GAMING CHIP INFORMATION
r
r
r
b
b
4303
USE MANAGEMENT DEVICE
DETERMIN -ING UNIT
4303
USE MANAGEMENT DEVICE
4231
NO
DOES INFORMATION CORRESPOND? AND DOES NUMBER COINCIDE?
YES
FAIL
PASS

Fig.41

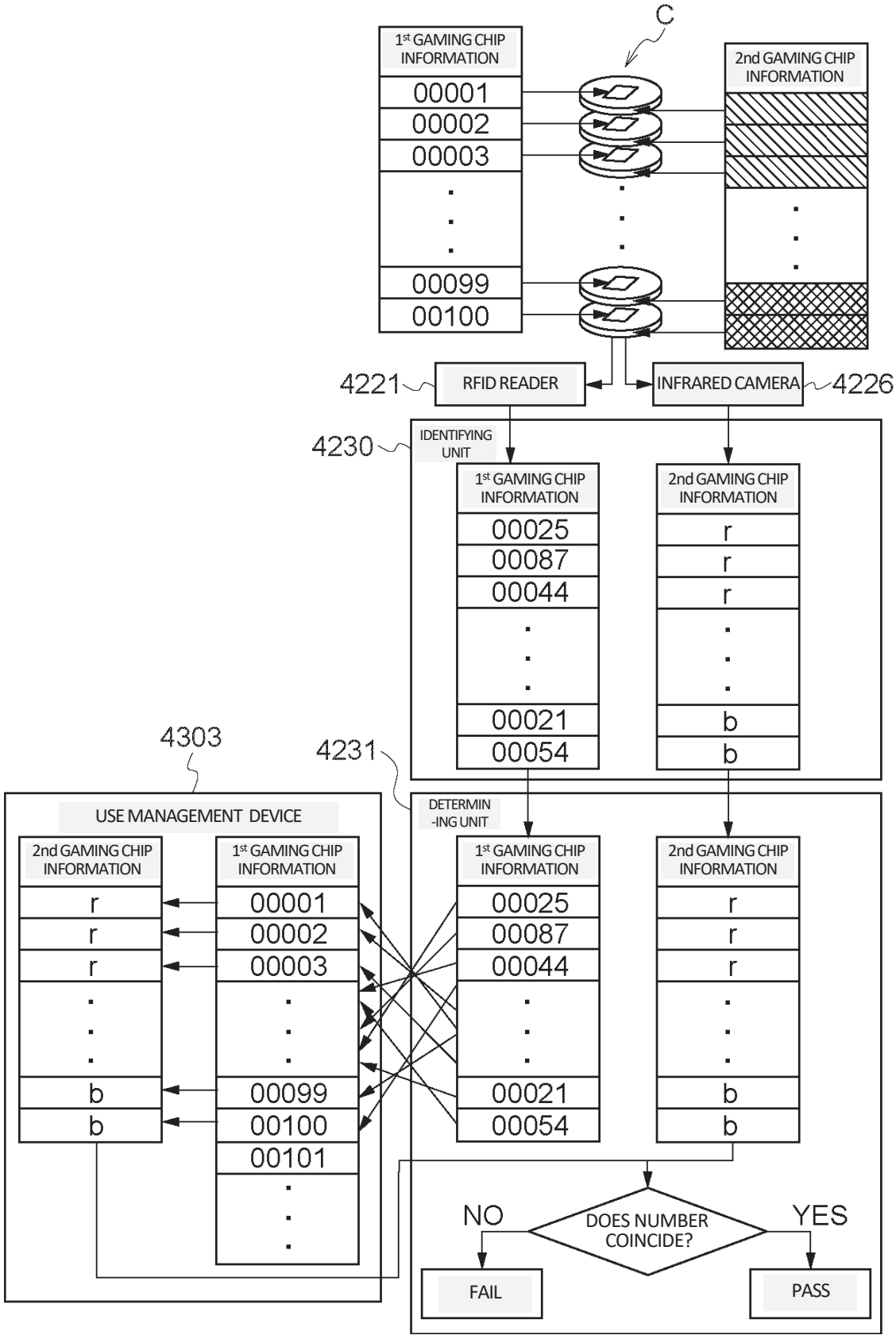
C
1st GAMING CHIP INFORMATION
00001
00002
00003
00099
00100
2nd GAMING CHIP INFORMATION
4221
RFID READER
INFRARED CAMERA
4226
4230
IDENTIFYING UNIT
1st GAMING CHIP INFORMATION
00025
00087
00044
00021
00054
2nd GAMING CHIP INFORMATION
r
r
r
b
b
4303
4231
USE MANAGEMENT DEVICE
DETERMIN -ING UNIT
2nd GAMING CHIP INFORMATION
1st GAMING CHIP INFORMATION
00101
NO
DOES NUMBER COINCIDE?
YES
FAIL
PASS

Fig.42

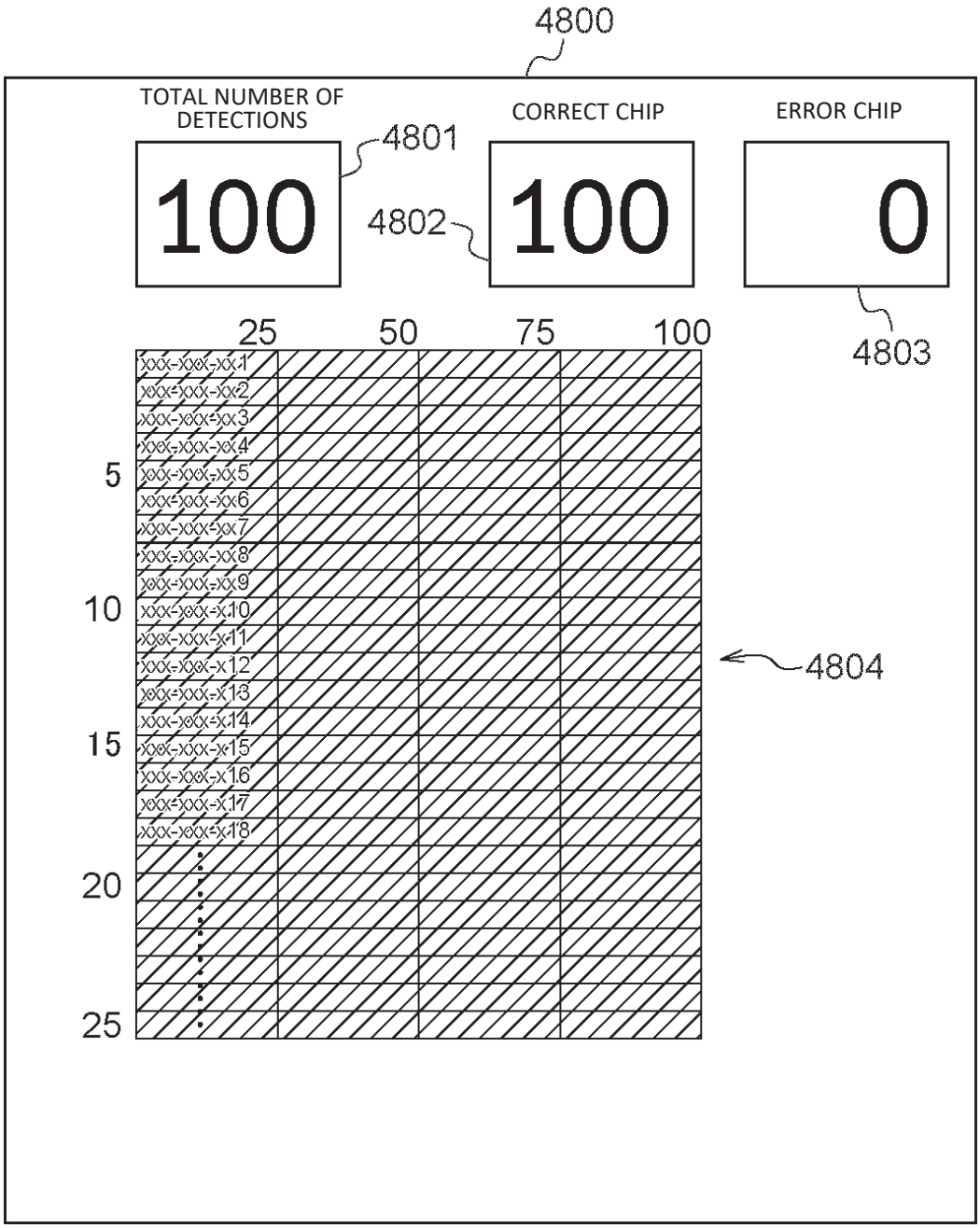
4800
TOTAL NUMBER OF DETECTIONS
4801
CORRECT CHIP
ERROR CHIP
100
4802
100
0
4803
25
50
75
100
5
10
15
20
25
4804

Fig.43

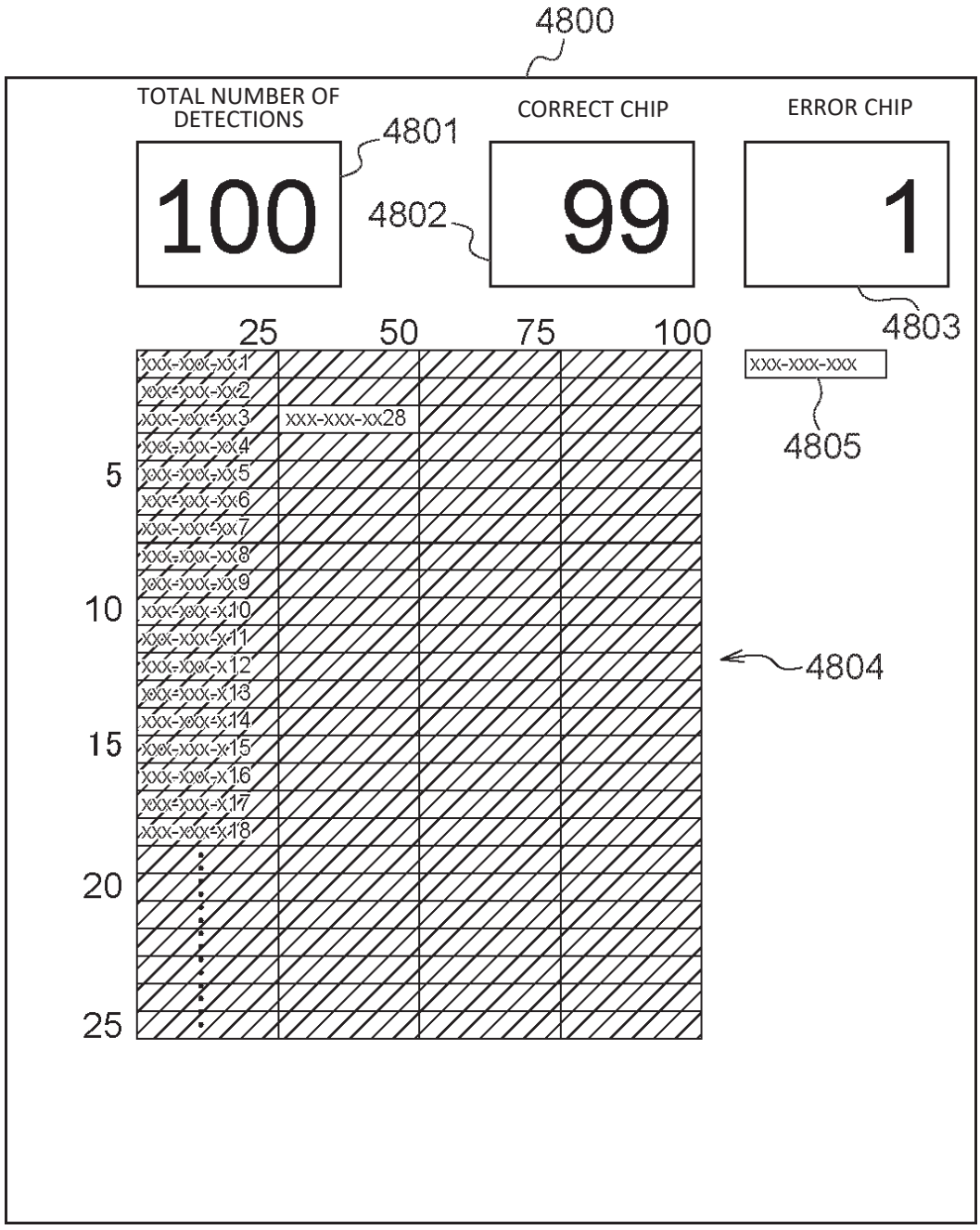
4800
TOTAL NUMBER OF DETECTIONS
4801
CORRECT CHIP
ERROR CHIP
100
4802
99
1
4803
25
50
75
100
xxx-xxx-xx1
xxx-xxx-xx2
xxx-xxx-xx3
xxx-xxx-xx28
xxx-xxx-xx4
xxx-xxx-xx5
xxx-xxx-xx6
xxx-xxx-xx7
xxx-xxx-xx8
xxx-xxx-xx9
xxx-xxx-x10
xxx-xxx-x11
xxx-xxx-x12
xxx-xxx-x13
xxx-xxx-x14
xxx-xxx-x15
xxx-xxx-x16
xxx-xxx-x17
xxx-xxx-x18
xxx-xxx-xxx
4805
4804
5
10
15
20
25

Fig.44

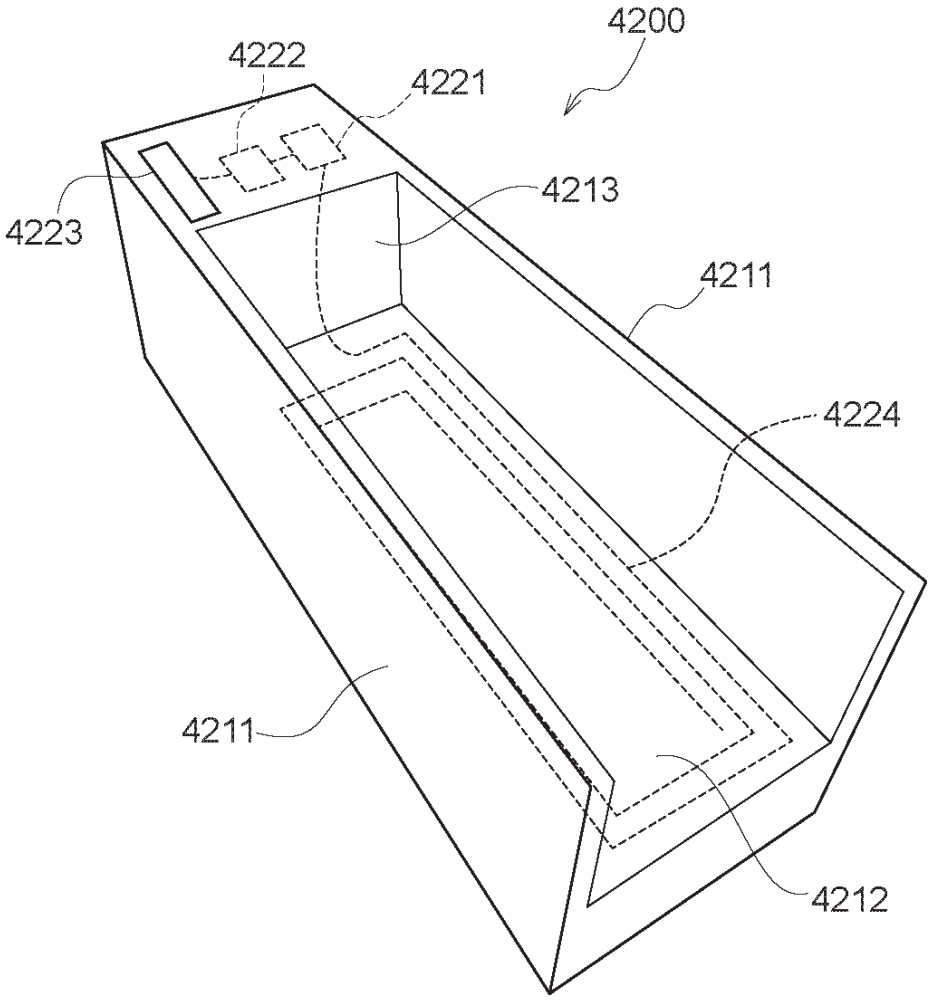

Fig.45

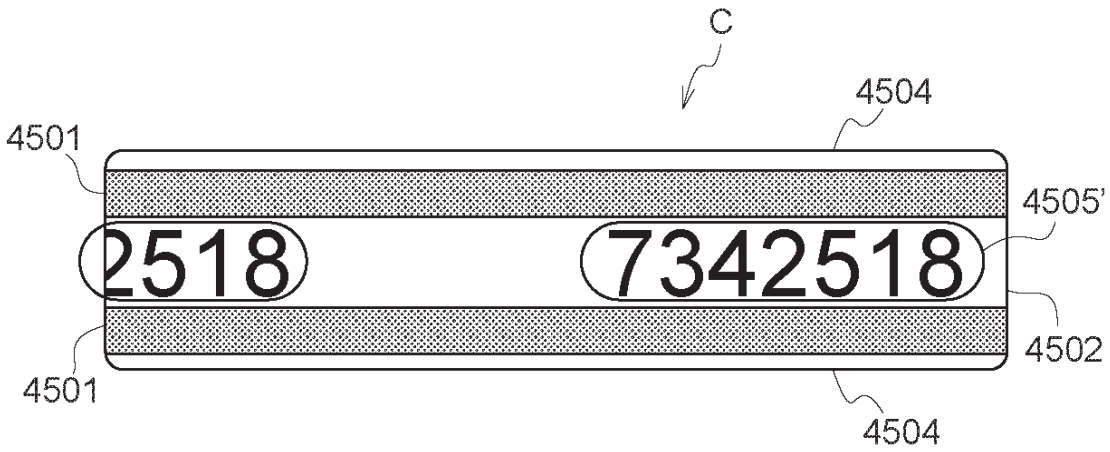

Fig.46

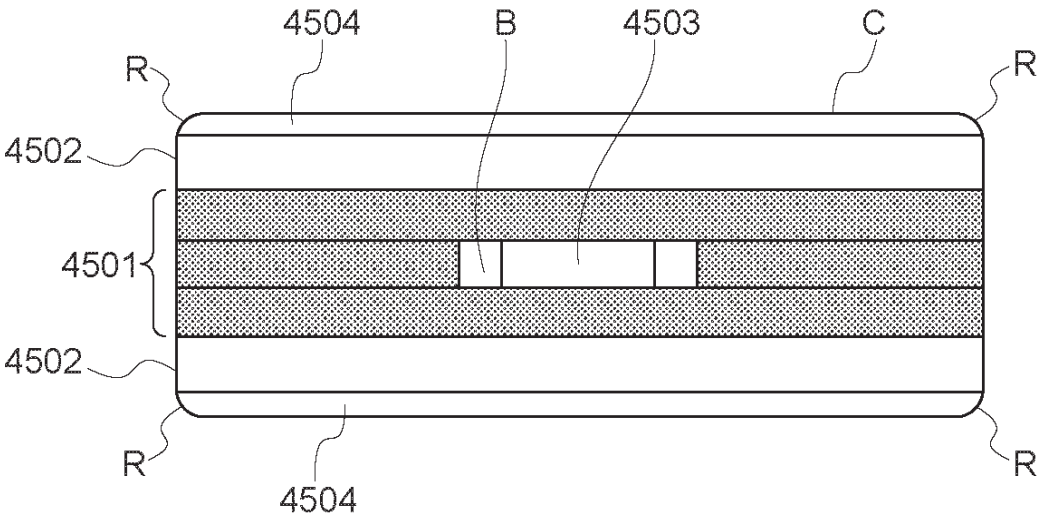

Fig.47

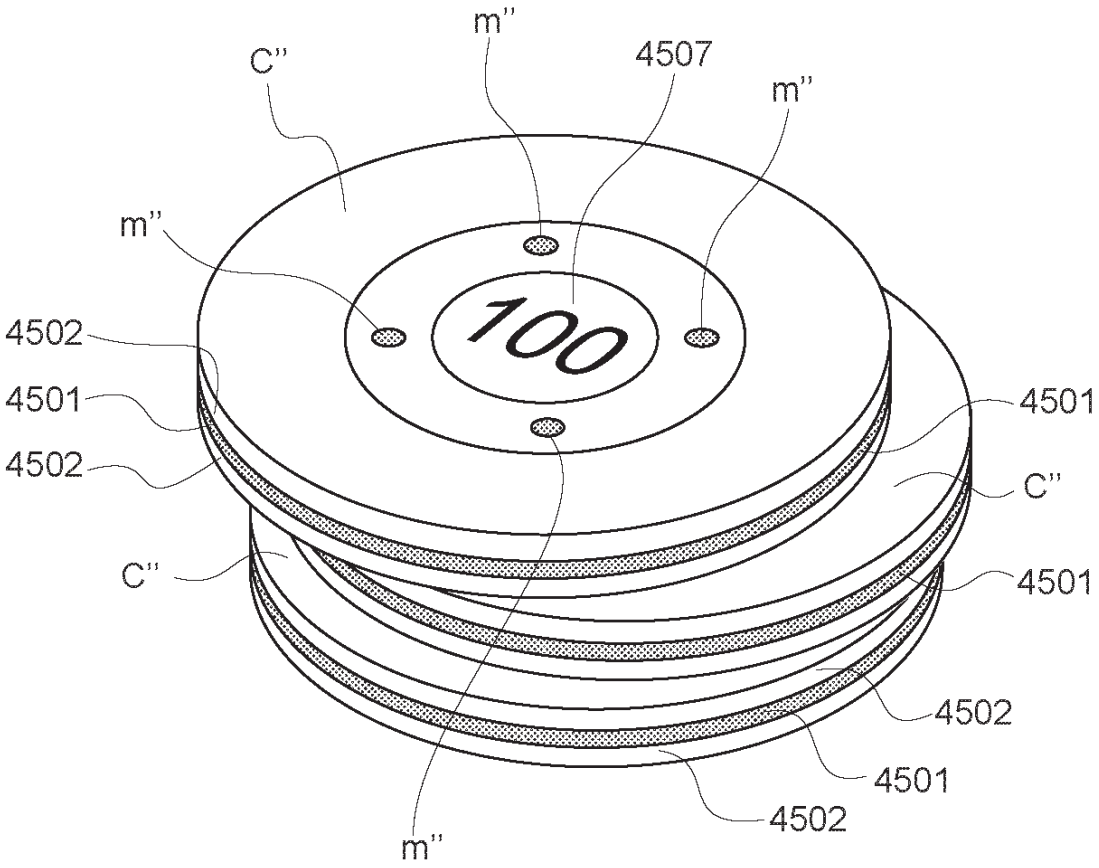

Fig.48

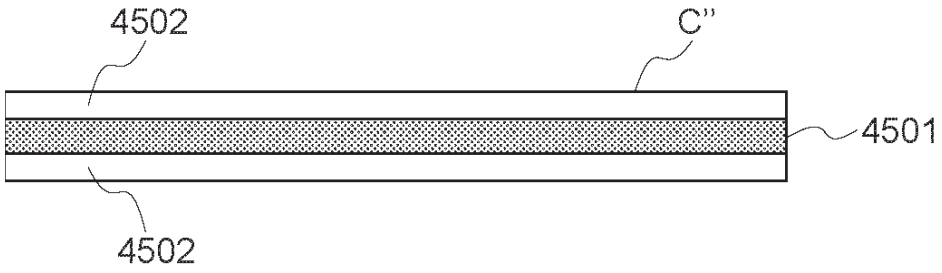

Fig.49

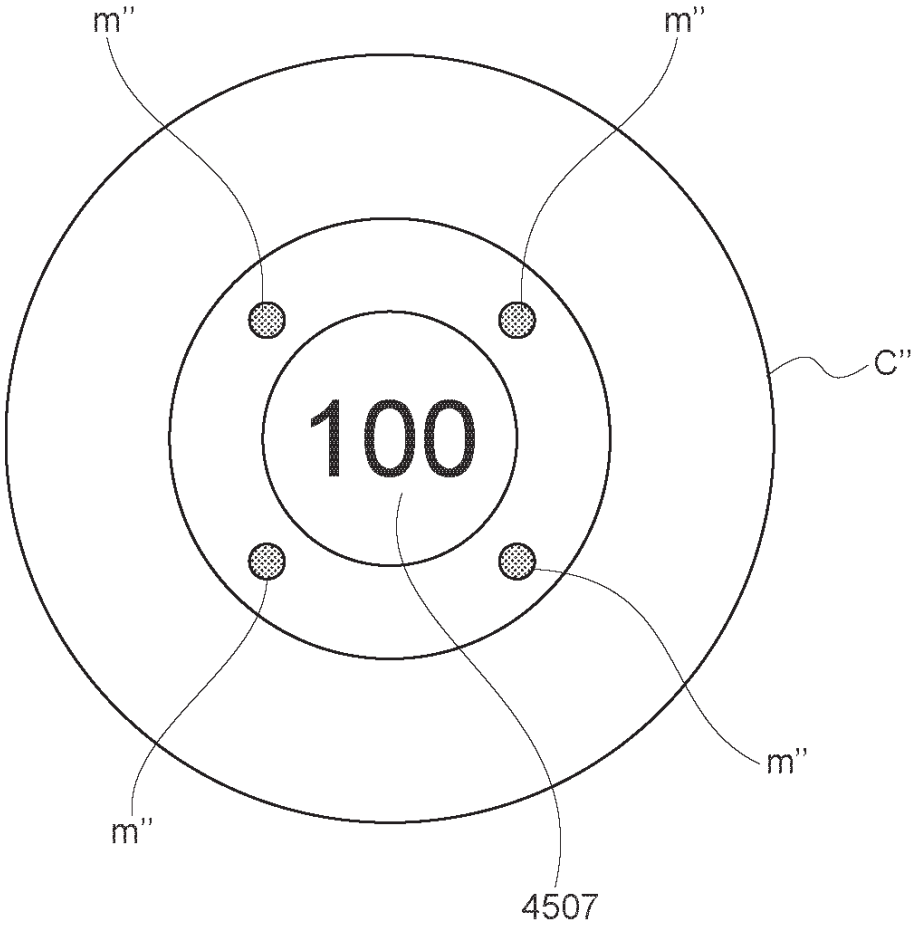

Fig.50

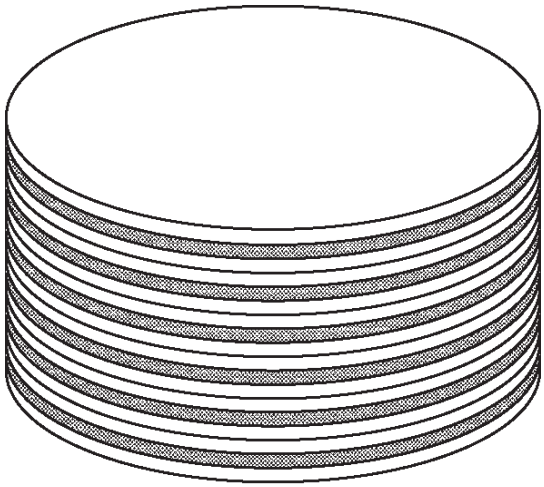

Fig.51

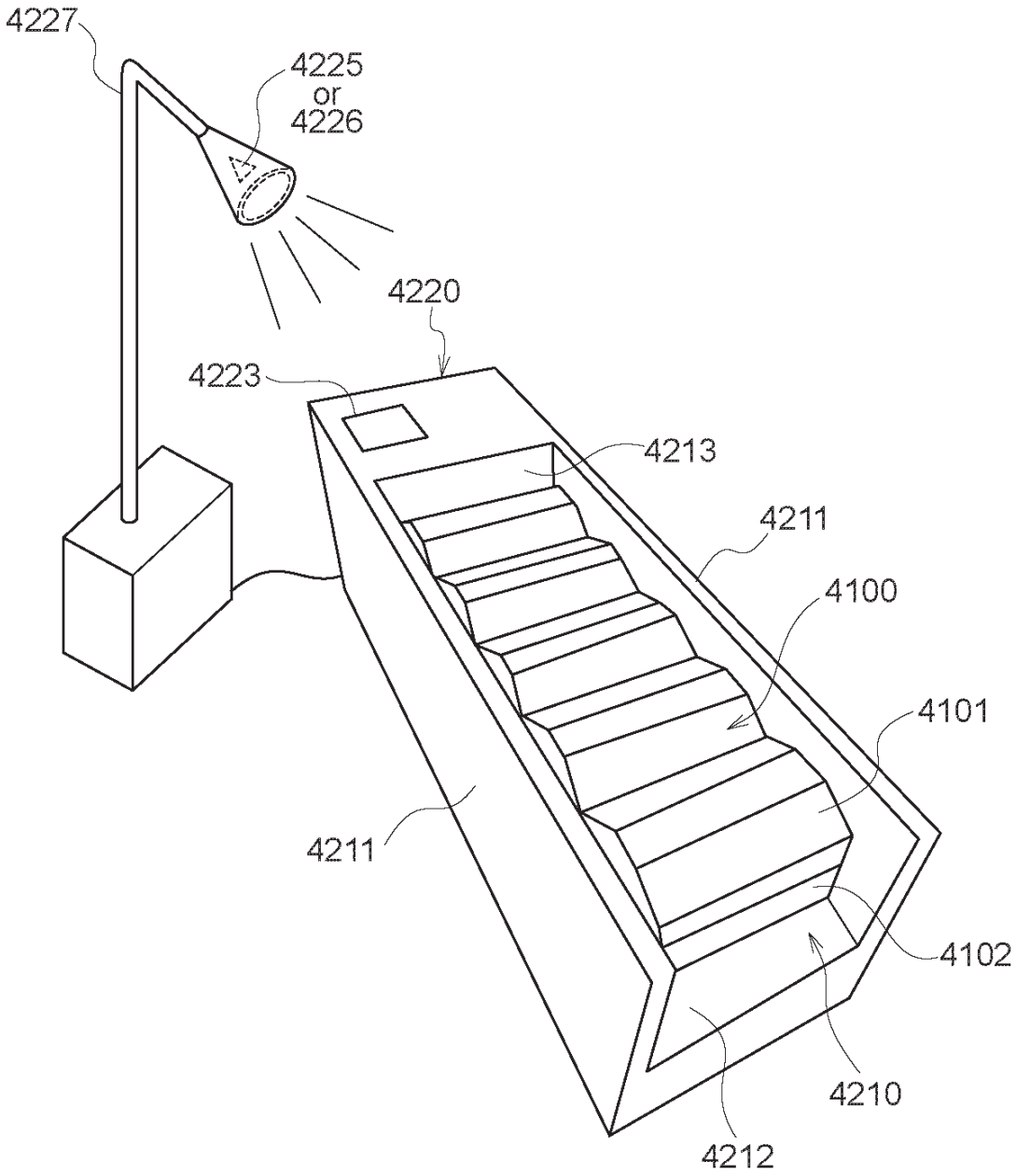
4227
4225
or
4226
4220
4223
4213
4211
4100
4101
4211
4102
4210
4212

Fig.52

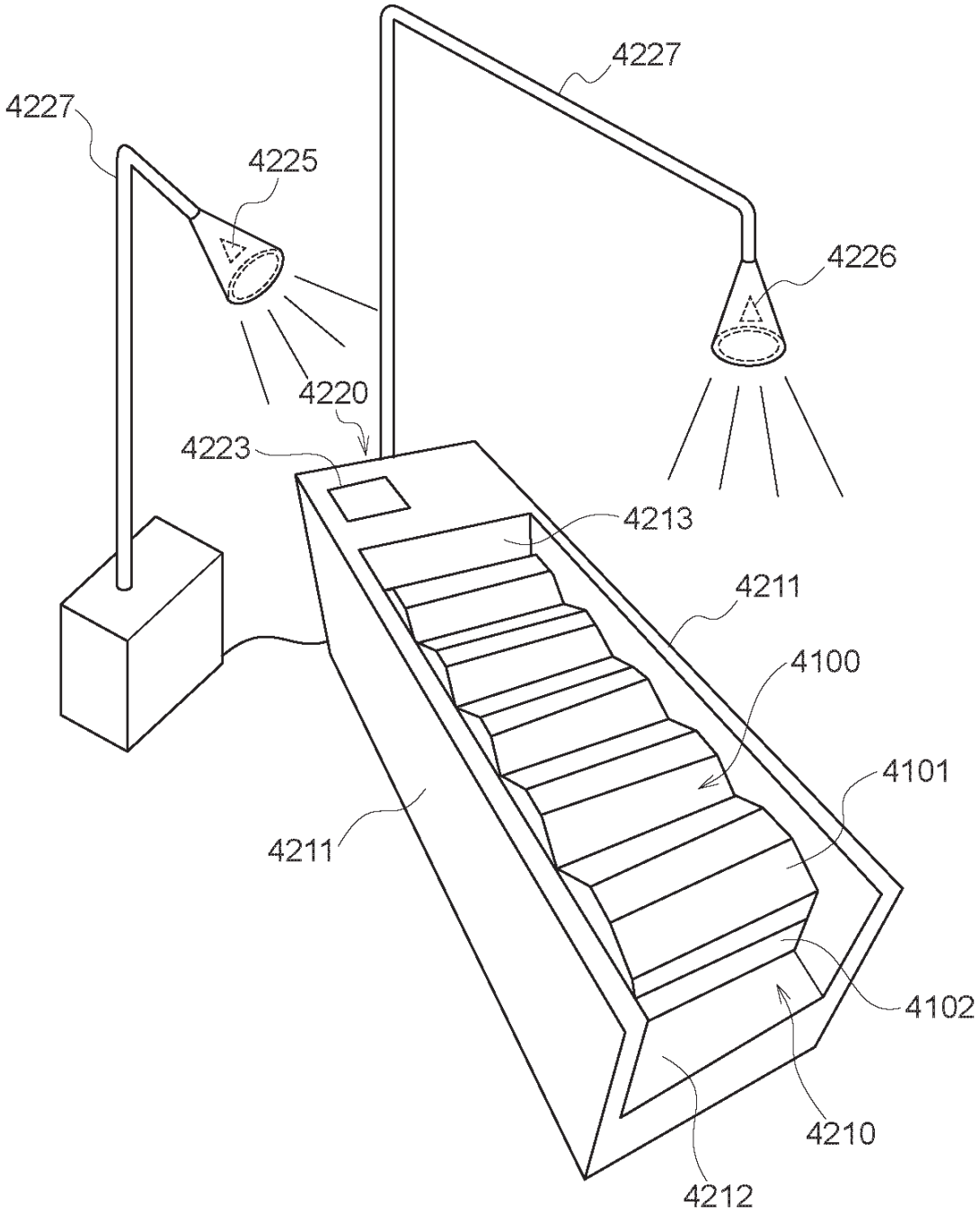
4227
4227
4225
4226
4220
4223
4213
4211
4100
4101
4211
4102
4210
4212

Fig.53

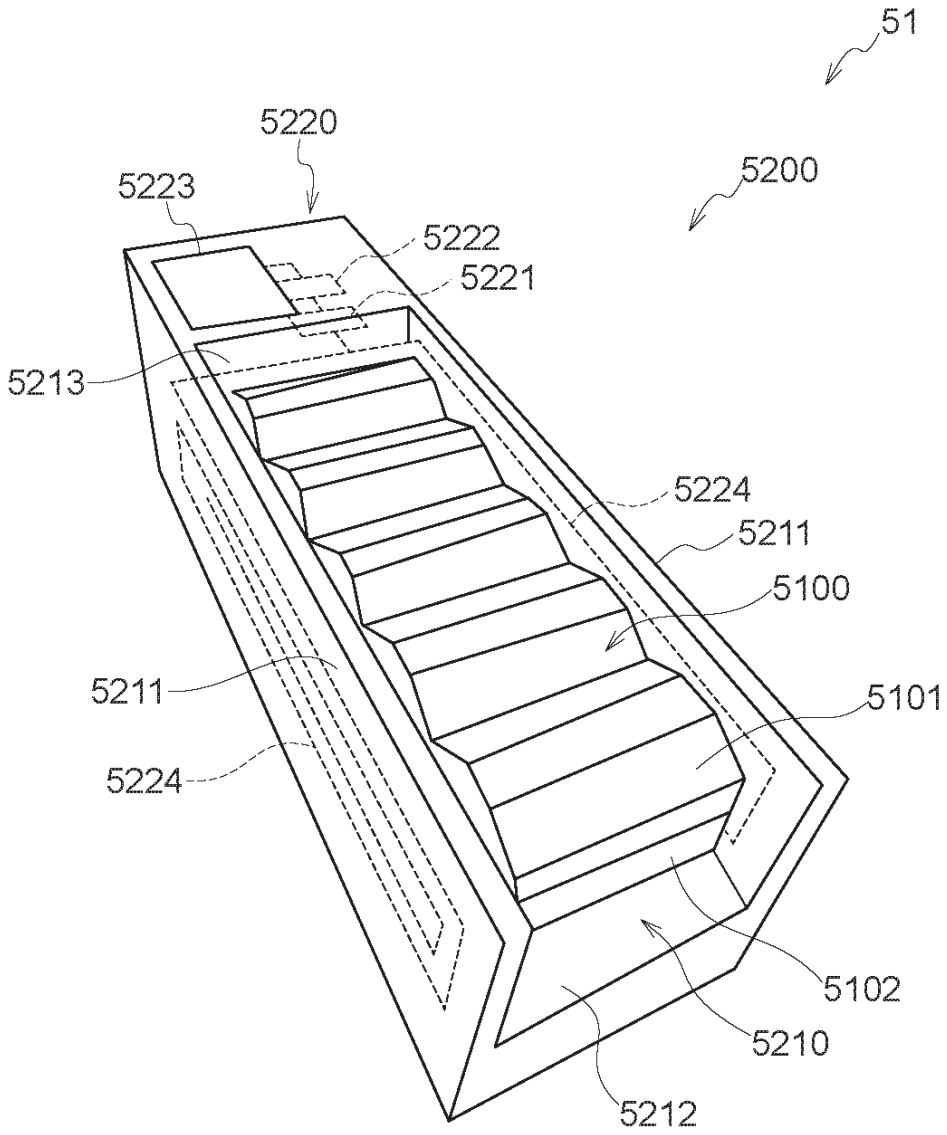
51
5220
5200
5223
5222
5221
5213
5224
5211
5100
5211
5101
5224
5102
5210
5212

Fig.54

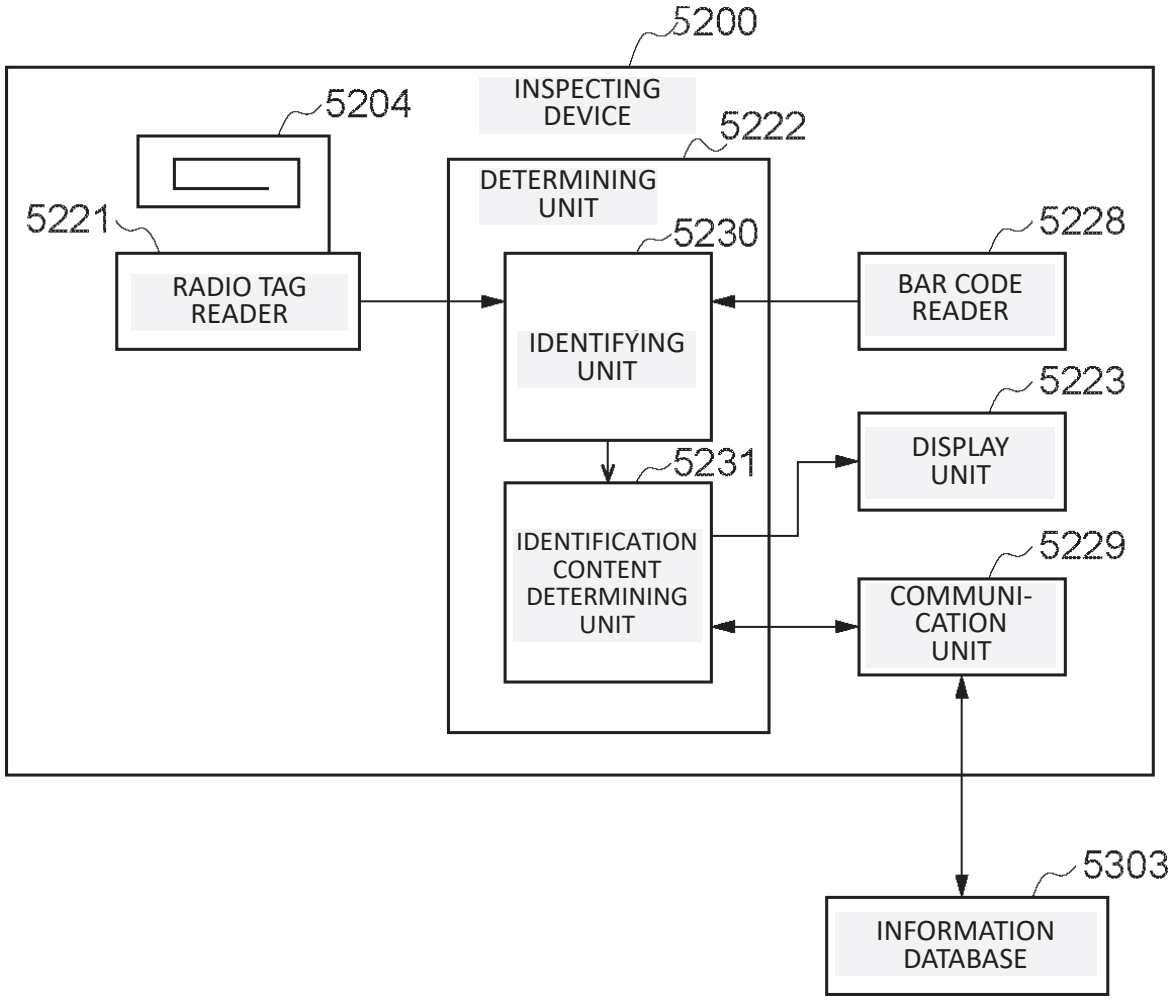
5200
INSPECTING DEVICE
5204
5221
RADIO TAG READER
5222
DETERMINING UNIT
5230
IDENTIFYING UNIT
5231
IDENTIFICATION CONTENT DETERMINING UNIT
5228
BAR CODE READER
5223
DISPLAY UNIT
5229
COMMUNI-CATION UNIT
5303
INFORMATION DATABASE

Fig.55

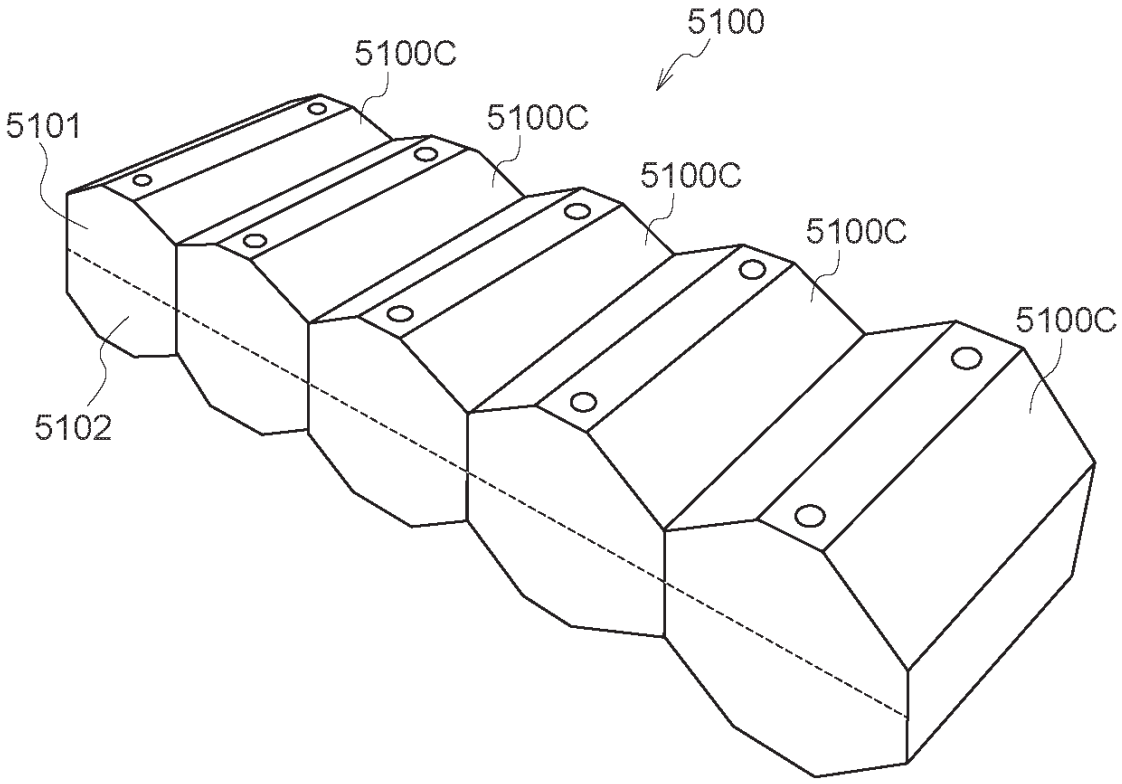

Fig.56

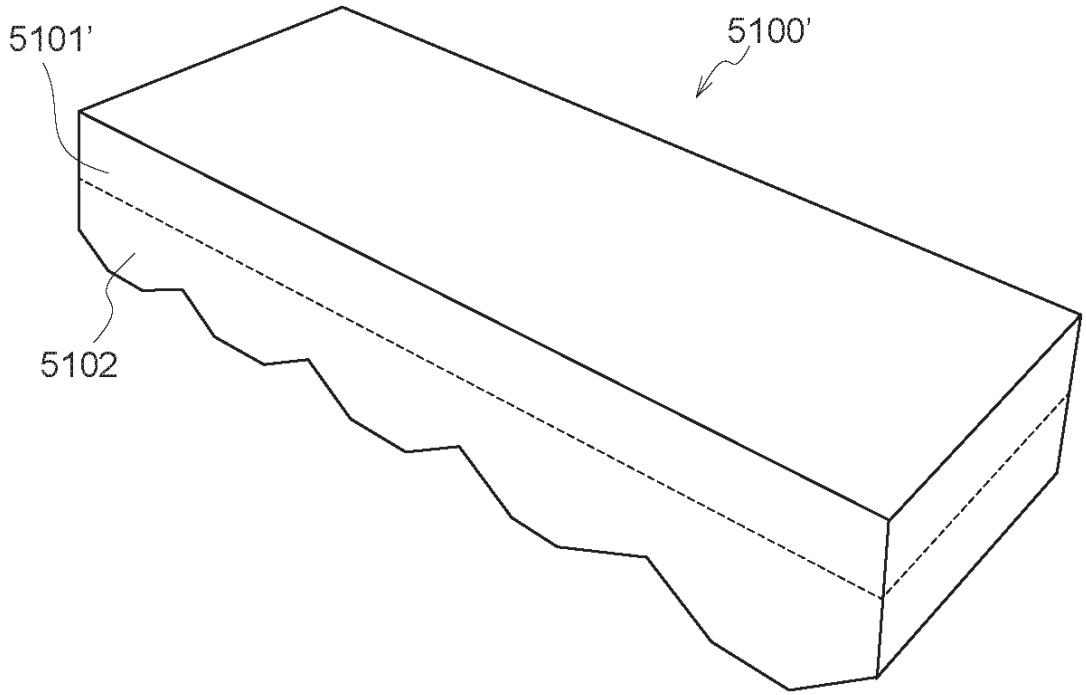

Fig.57

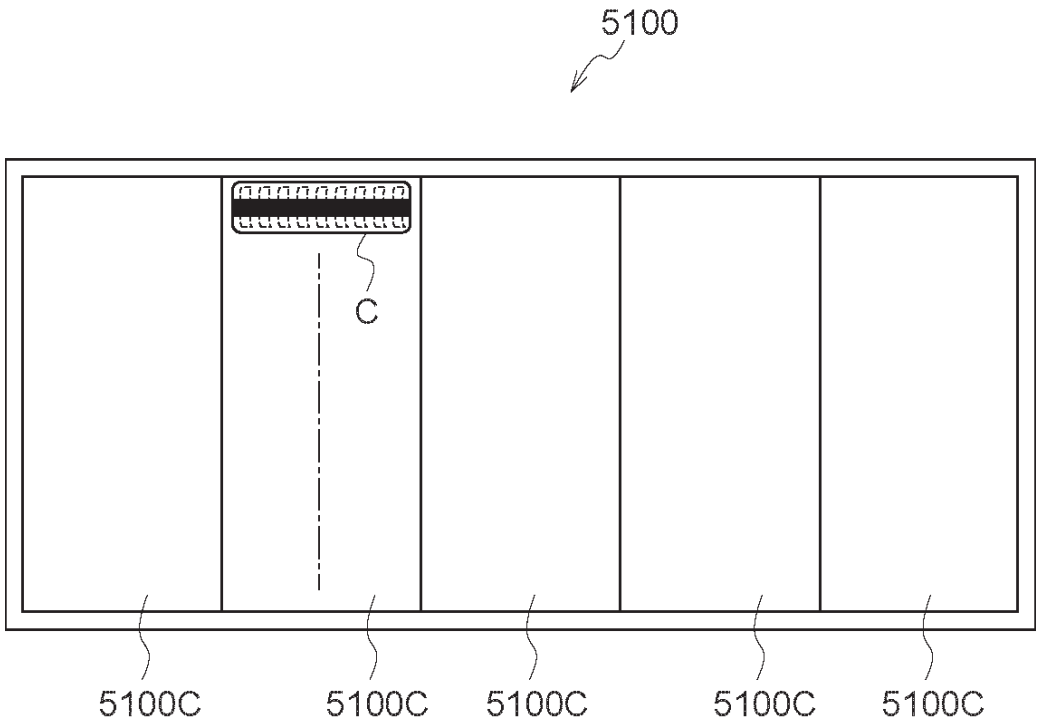

Fig.58

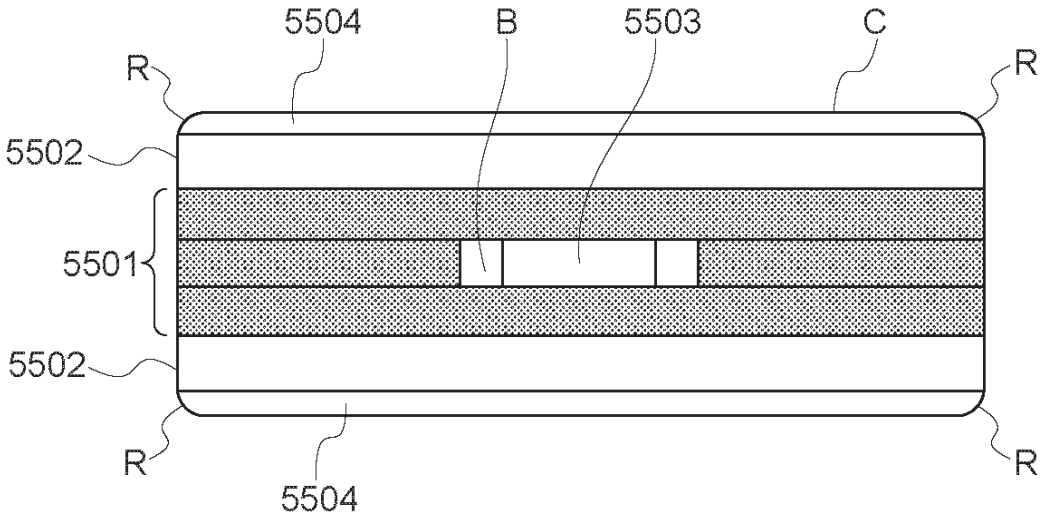

Fig.59

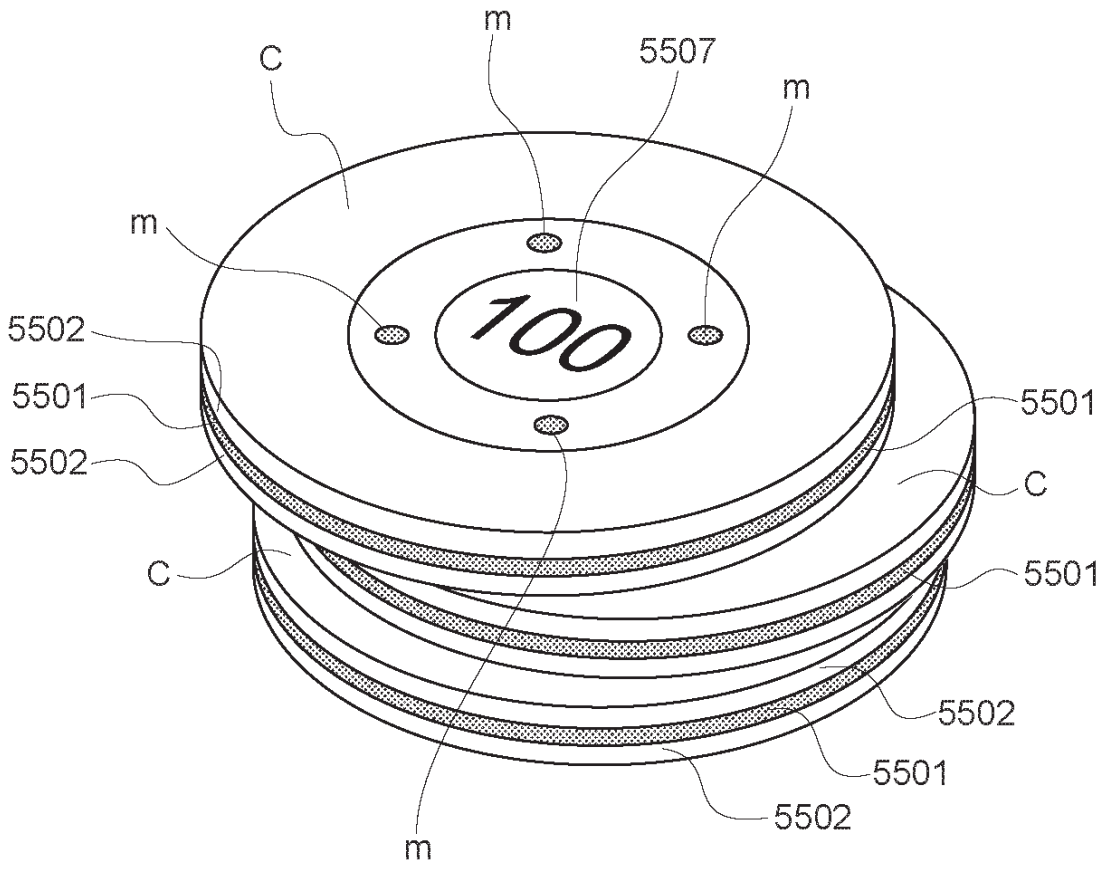

Fig.60

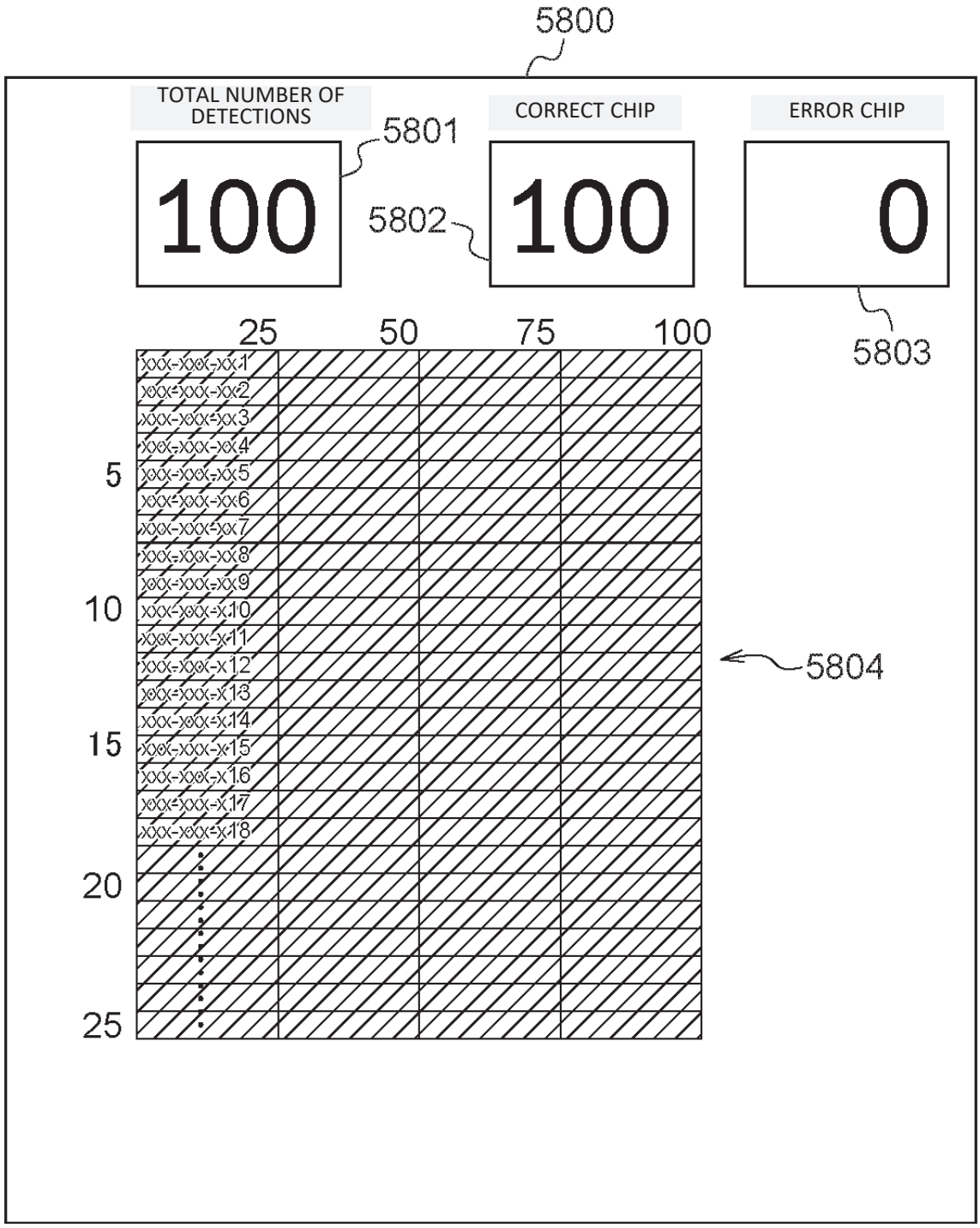
5800
TOTAL NUMBER OF DETECTIONS
5801
CORRECT CHIP
ERROR CHIP
100
5802
100
0
5803
25
50
75
100
5
10
15
20
25
5804

Fig.61

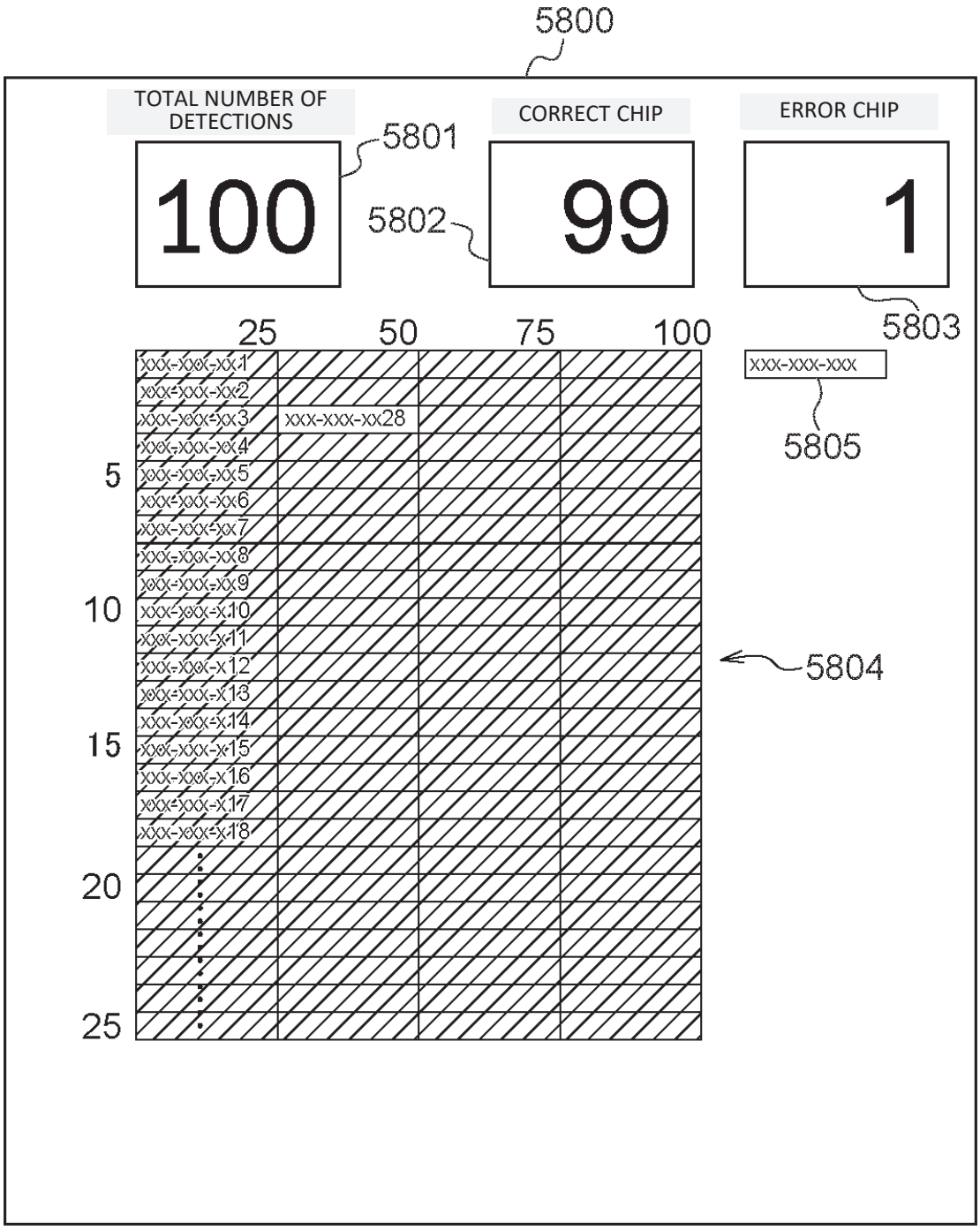
5800
TOTAL NUMBER OF DETECTIONS
CORRECT CHIP
ERROR CHIP
5801
100
5802
99
1
5803
25
50
75
100
xxx-xxx-xx1
xxx-xxx-xx2
xxx-xxx-xx3
xxx-xxx-xx28
xxx-xxx-xx4
xxx-xxx-xx5
xxx-xxx-xx6
xxx-xxx-xx7
xxx-xxx-xx8
xxx-xxx-xx9
xxx-xxx-x10
xxx-xxx-x11
xxx-xxx-x12
xxx-xxx-x13
xxx-xxx-x14
xxx-xxx-x15
xxx-xxx-x16
xxx-xxx-x17
xxx-xxx-x18
xxx-xxx-xxx
5805
5804
5
10
15
20
25

Fig.62

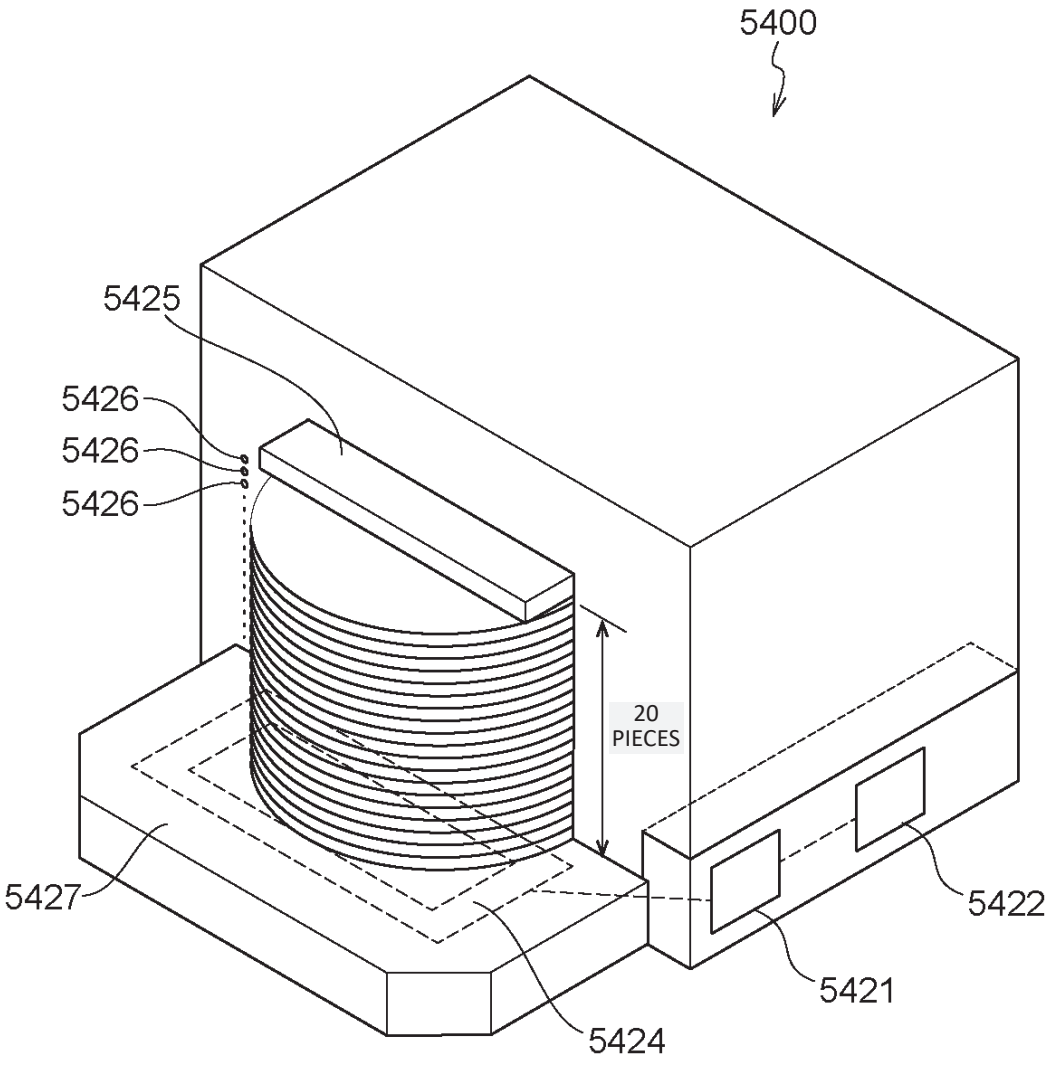

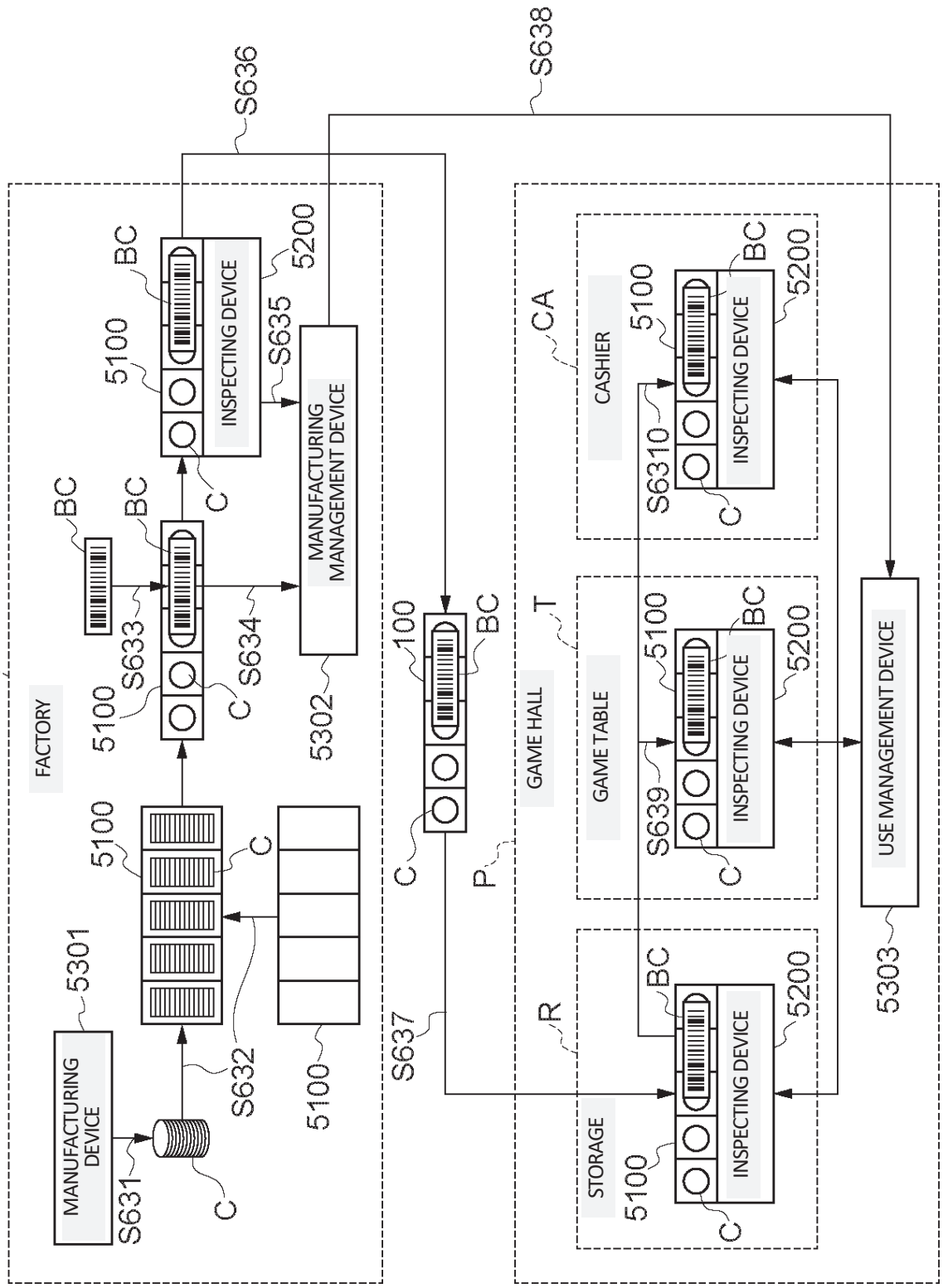
S636
S638
F
FACTORY
MANUFACTURING DEVICE
5301
S631
C
S632
5100
C
5100
S633
BC
BC
C
5100
S634
C
5100
BC
INSPECTING DEVICE
5200
S635
MANUFACTURING MANAGEMENT DEVICE
5302
100
BC
C
S637
P
GAME HALL
CA
CASHIER
5100
BC
5200
INSPECTING DEVICE
S6310
C
T
GAME TABLE
5100
BC
5200
INSPECTING DEVICE
S639
C
R
STORAGE
BC
5200
INSPECTING DEVICE
5100
C
USE MANAGEMENT DEVICE
5303

Fig.63

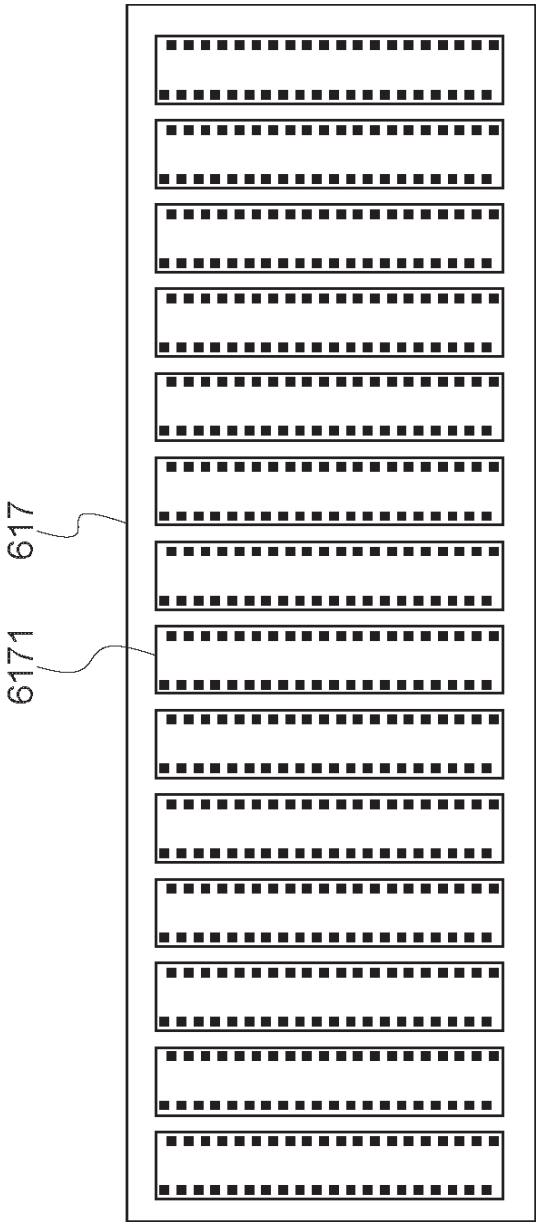

Fig.64

Fig.65

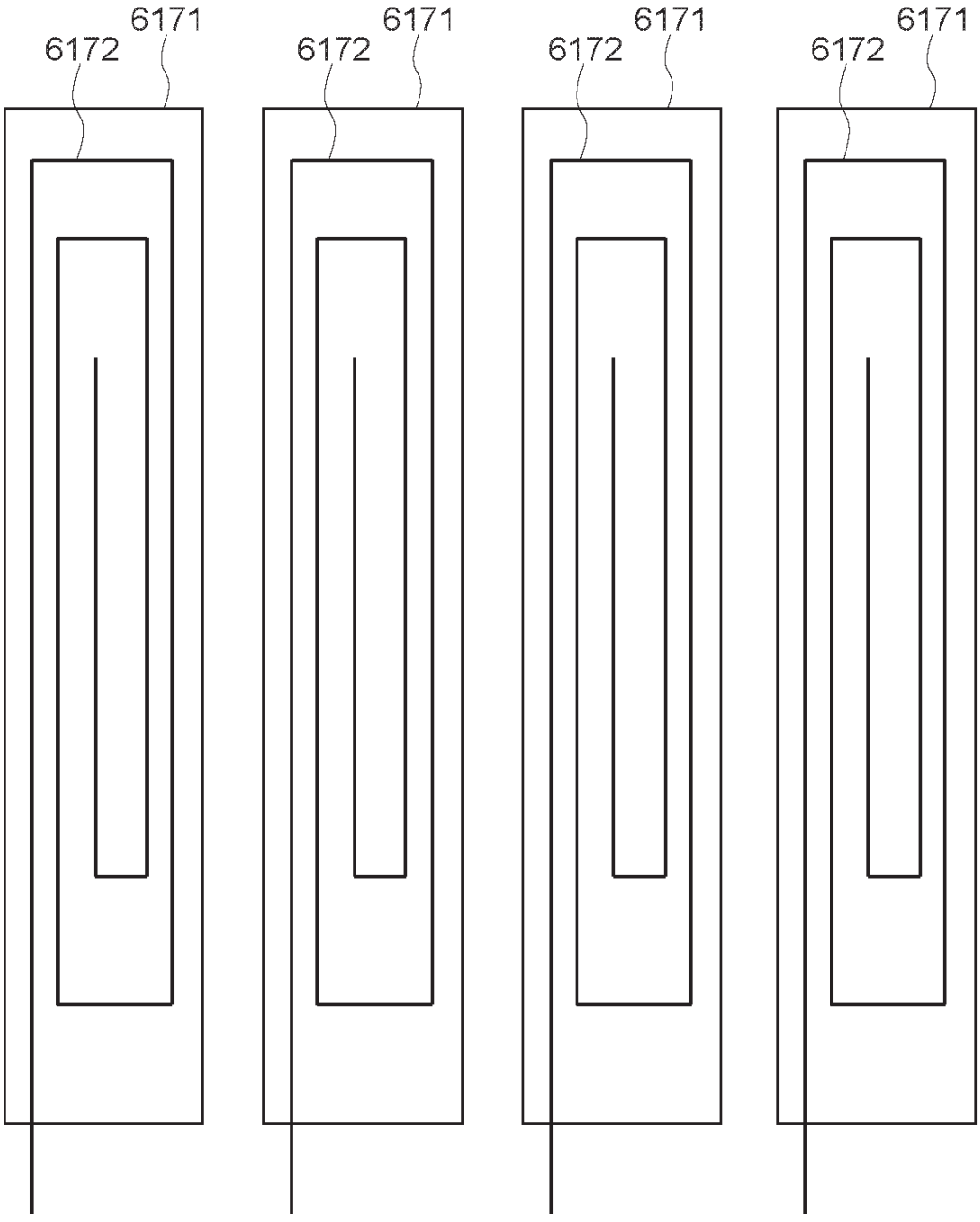

Fig.66

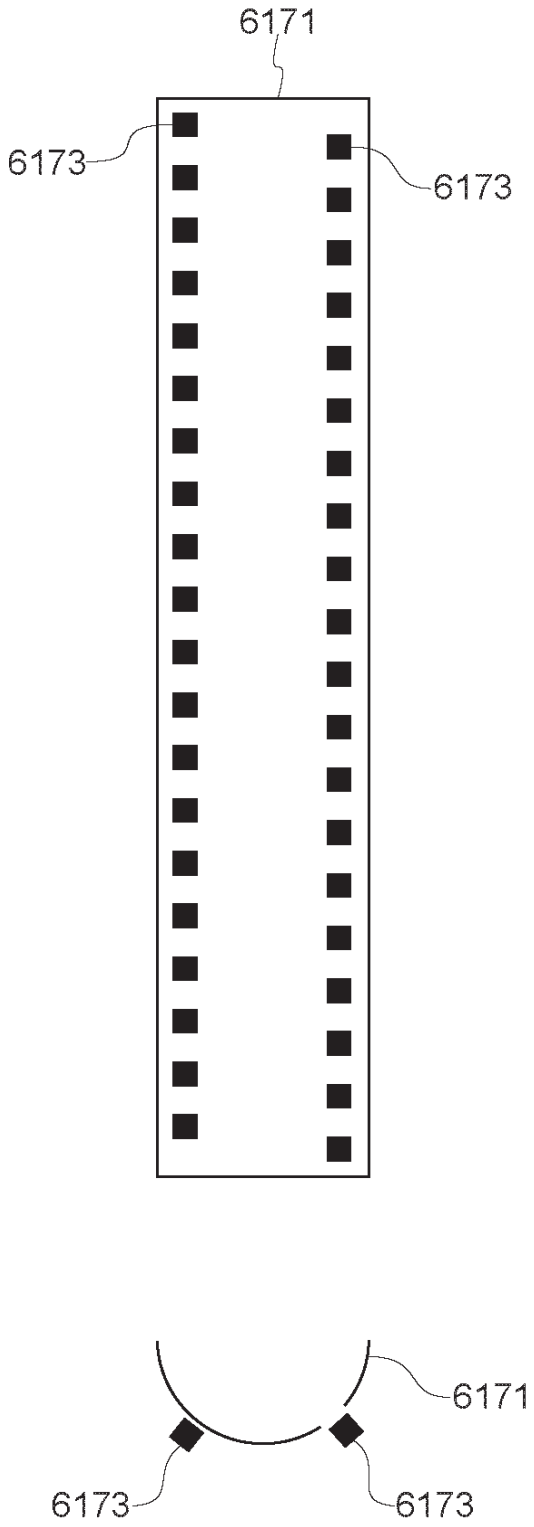

Fig.67

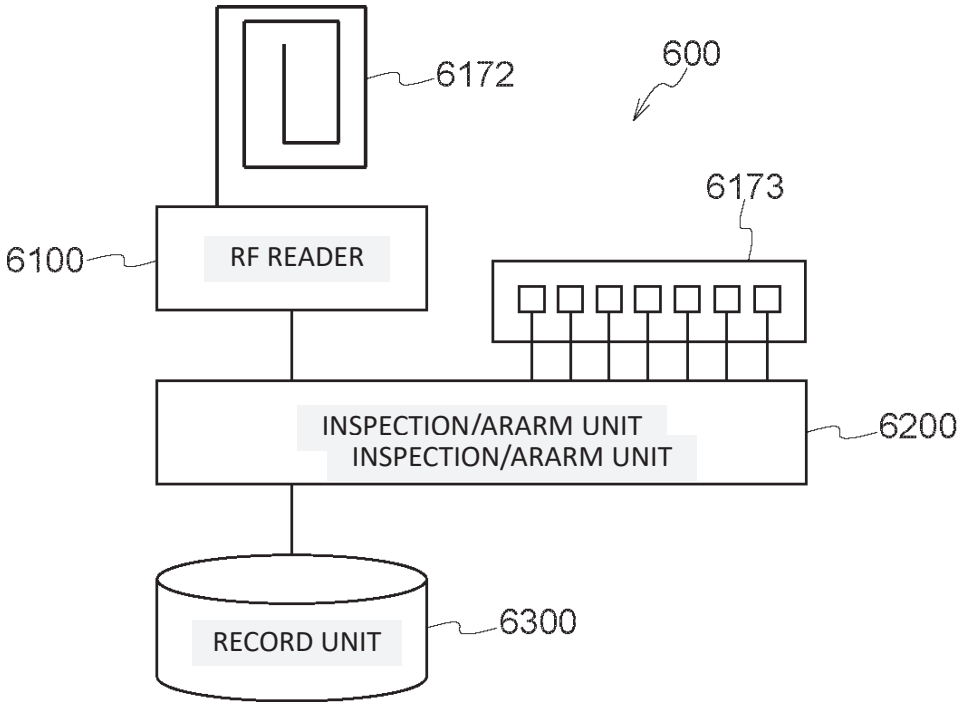
6172
600
6173
6100
RF READER
INSPECTION/ARARM UNIT
INSPECTION/ARARM UNIT
6200
RECORD UNIT
6300

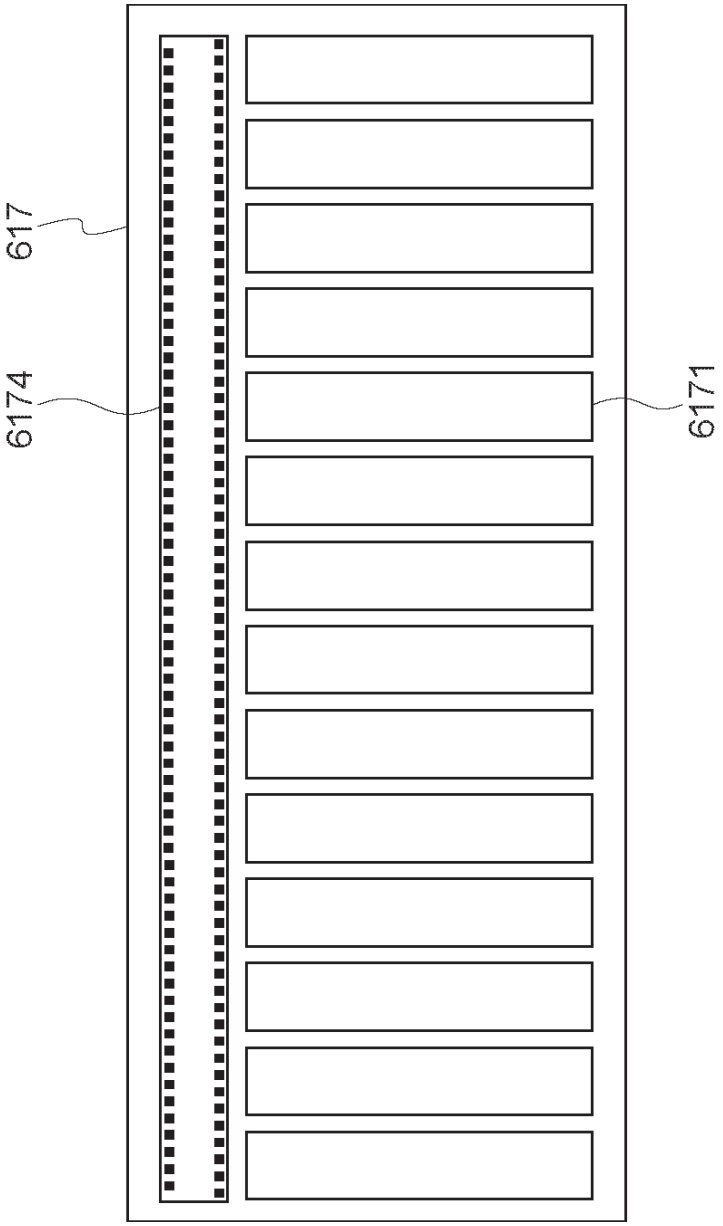

Fig.68

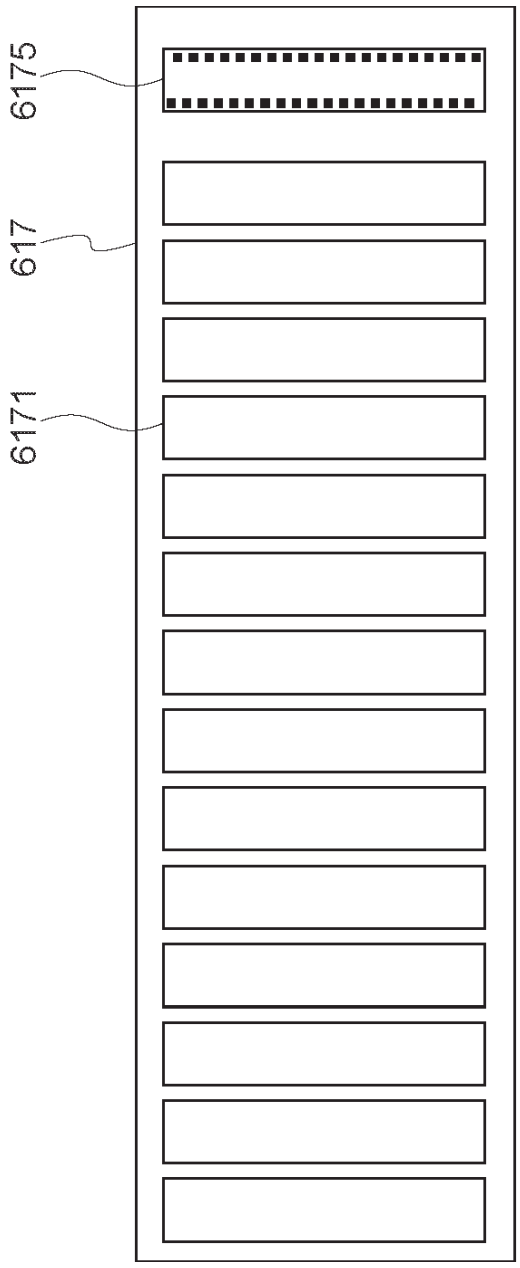

Fig.69

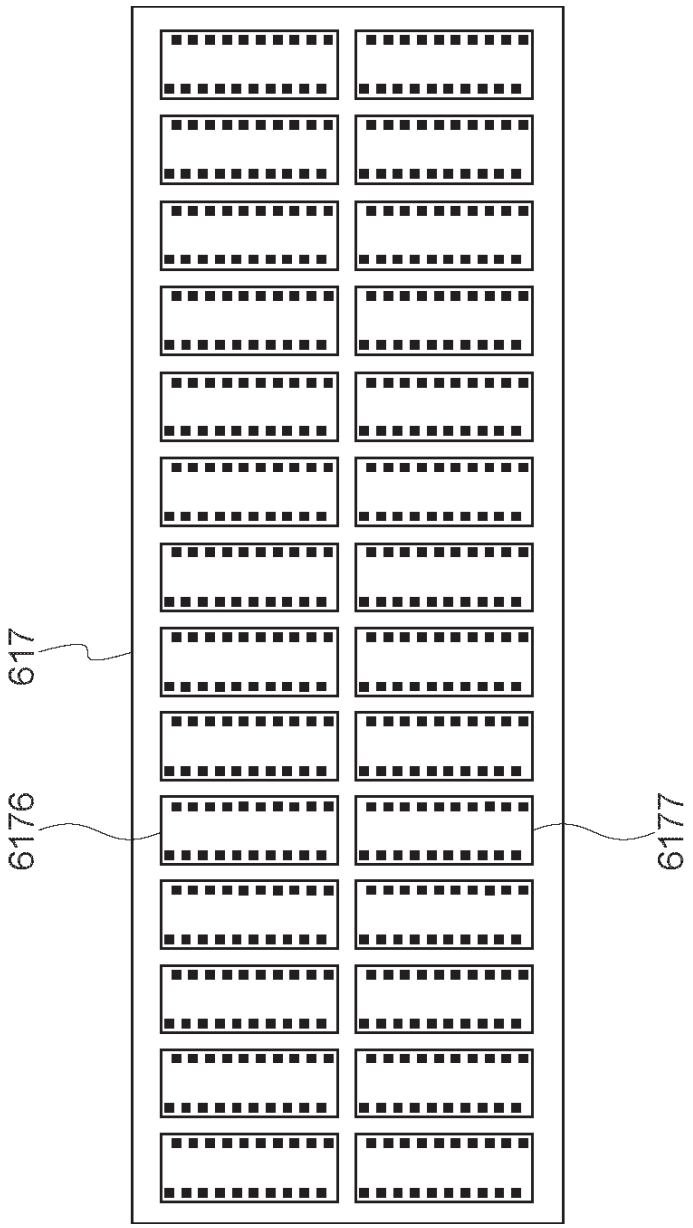

Fig.70

Fig.71

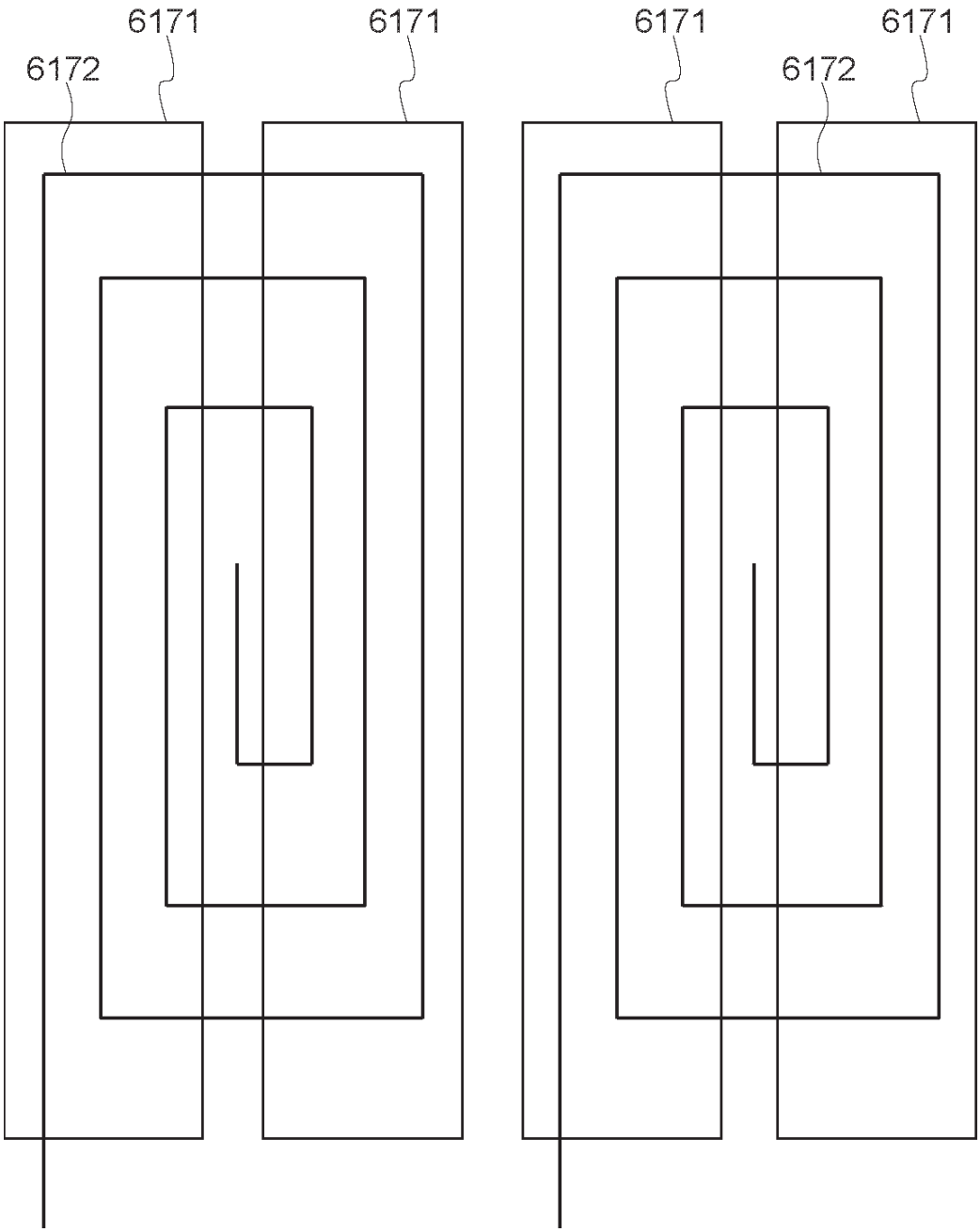

Fig.72

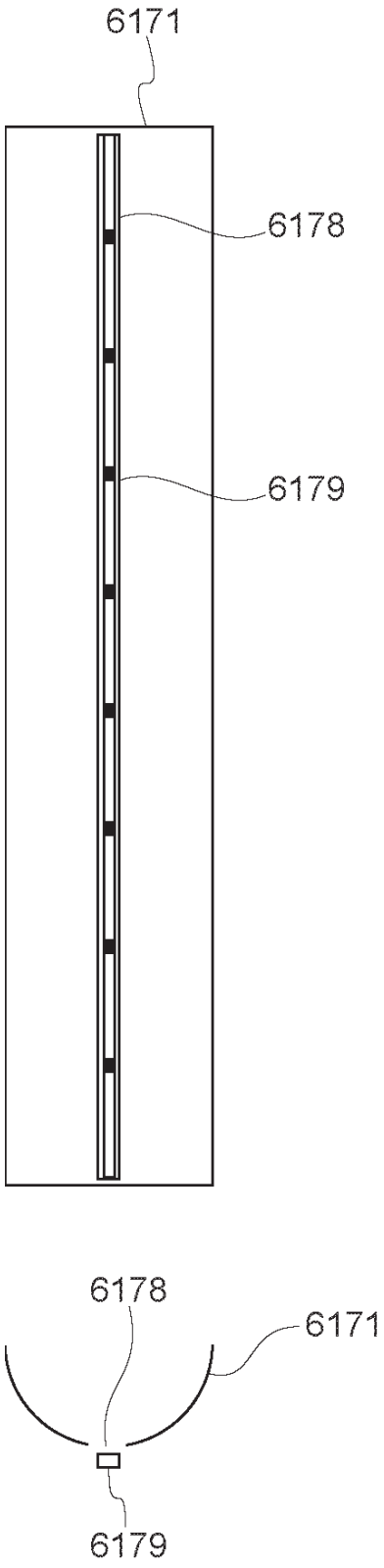

Fig.73

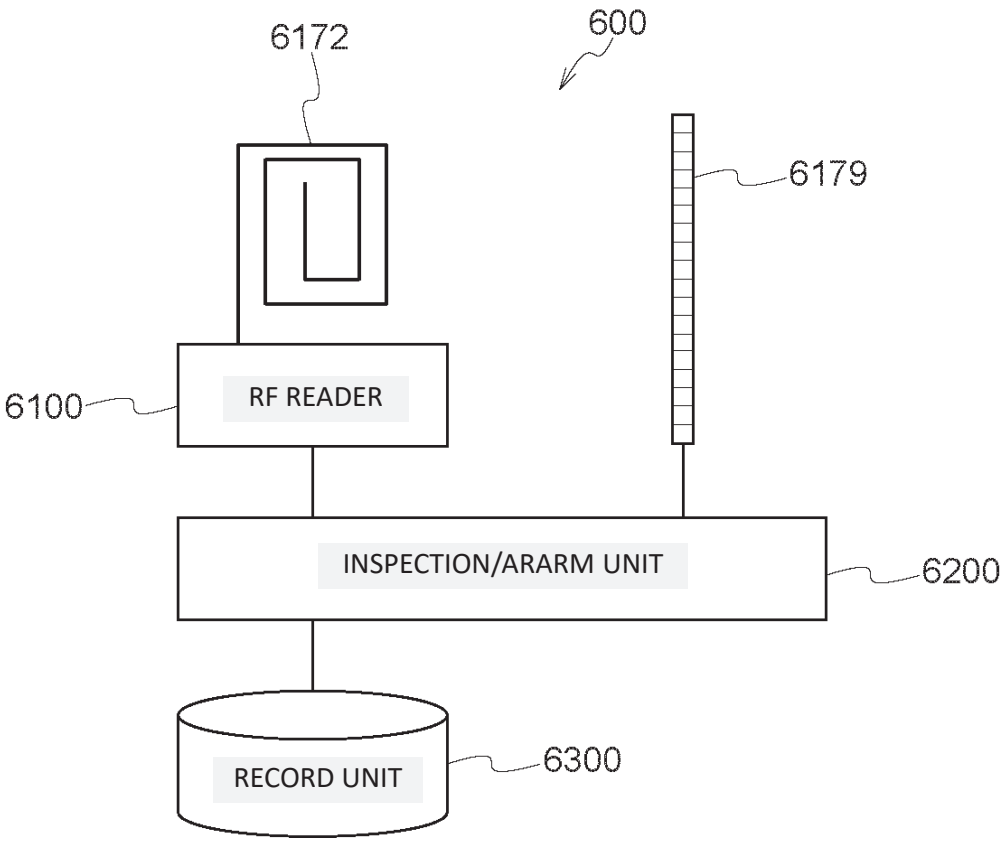
6172
600
6179
6100
RF READER
INSPECTION/ARARM UNIT
6200
RECORD UNIT
6300

Fig.74

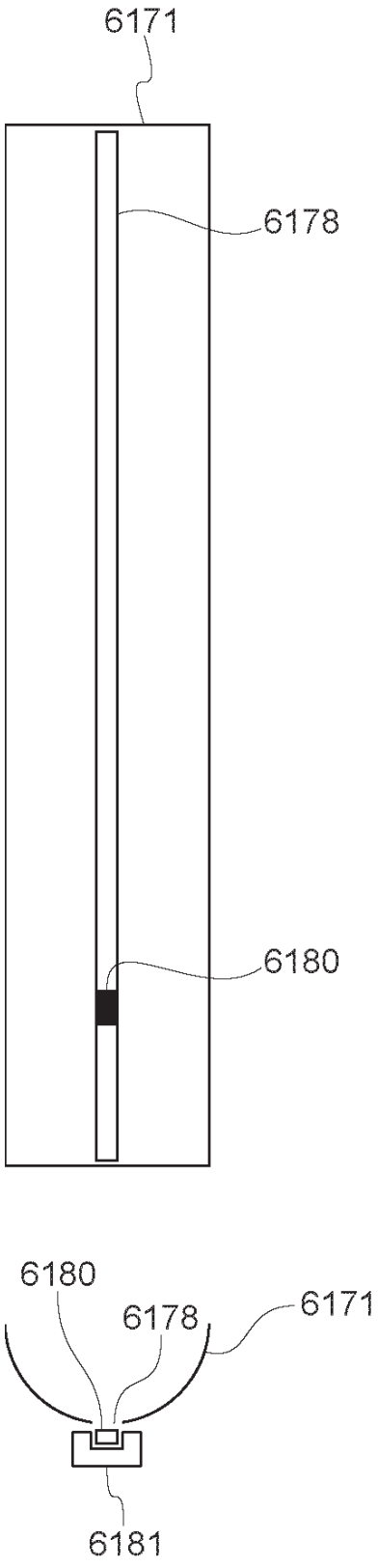

Fig.75

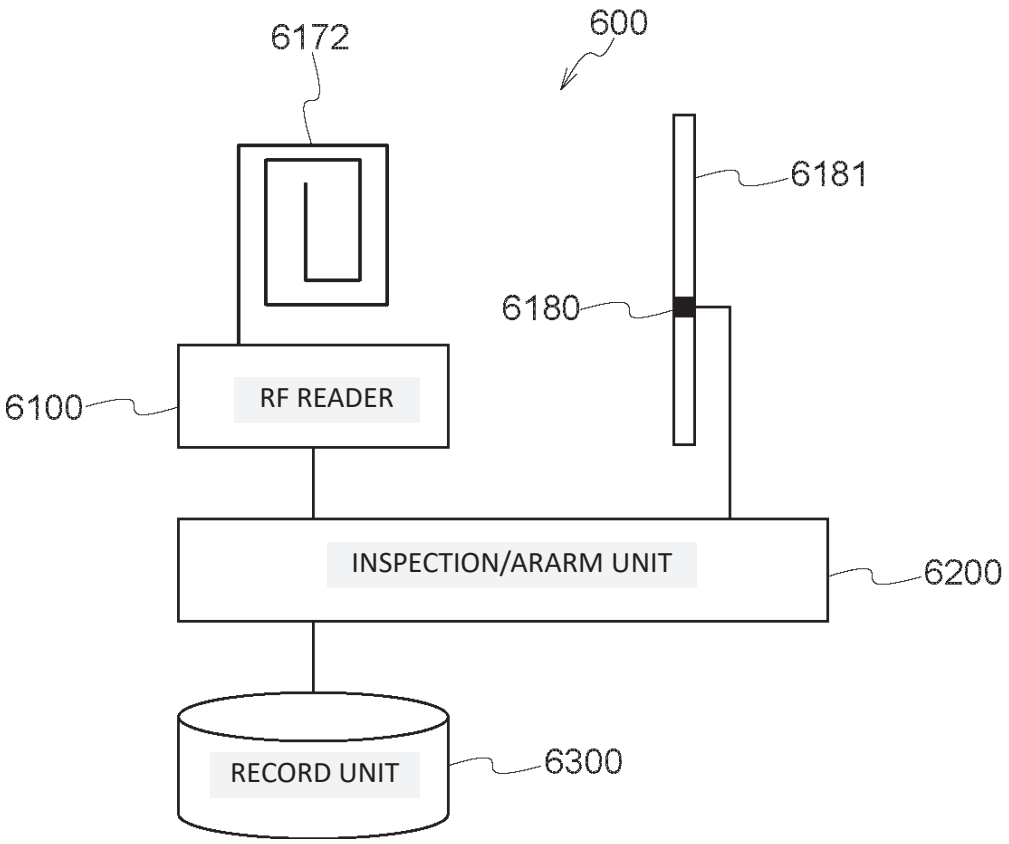
6172
600
6181
6180
6100
RF READER
INSPECTION/ARARM UNIT
6200
RECORD UNIT
6300

Fig.76

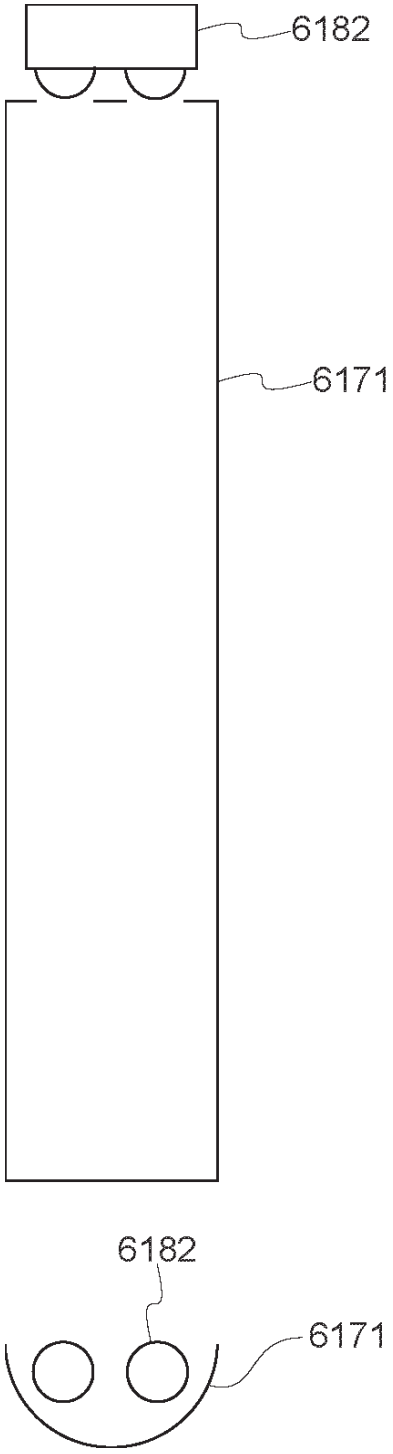

Fig.77

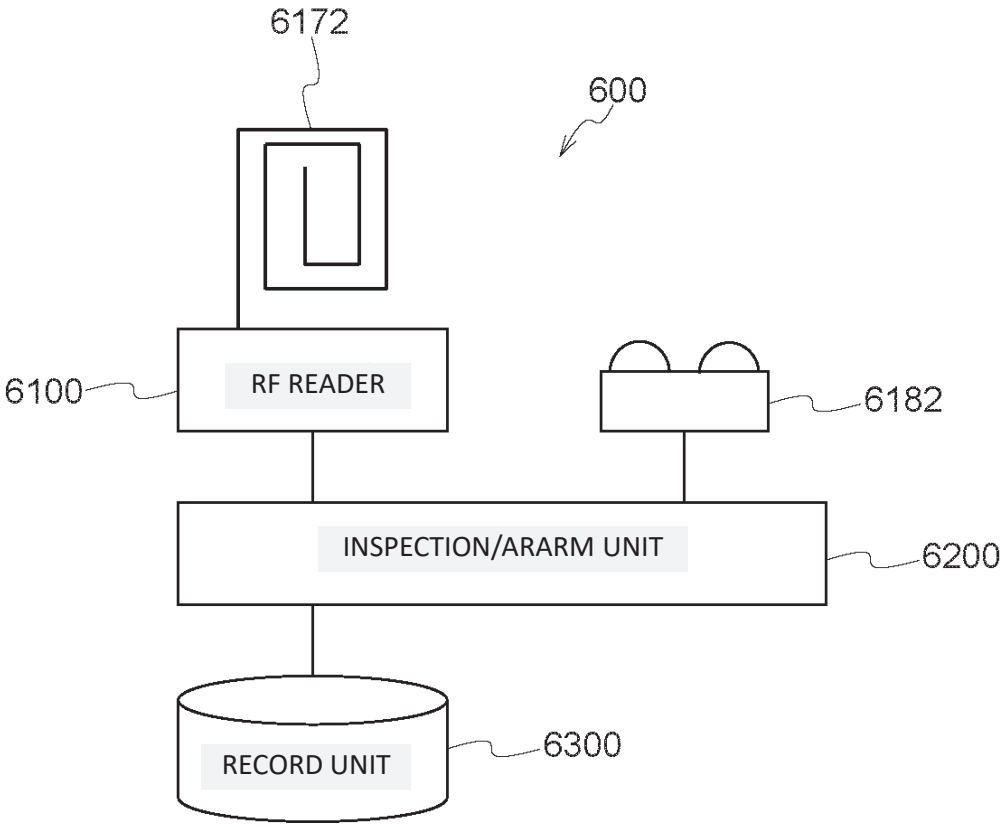
6172
600
6100
RF READER
6182
INSPECTION/ARARM UNIT
6200
RECORD UNIT
6300

Fig.78

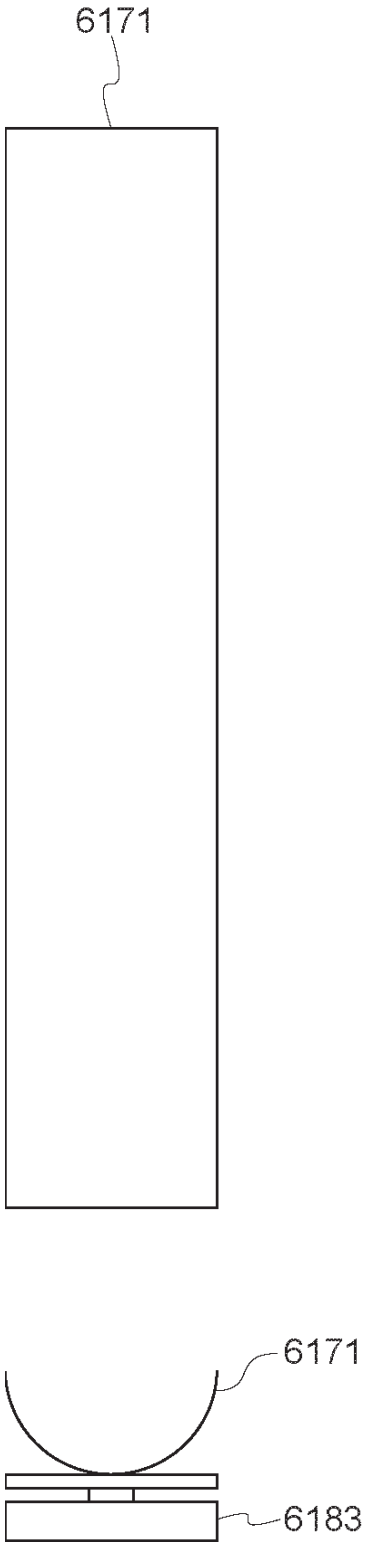

Fig.79

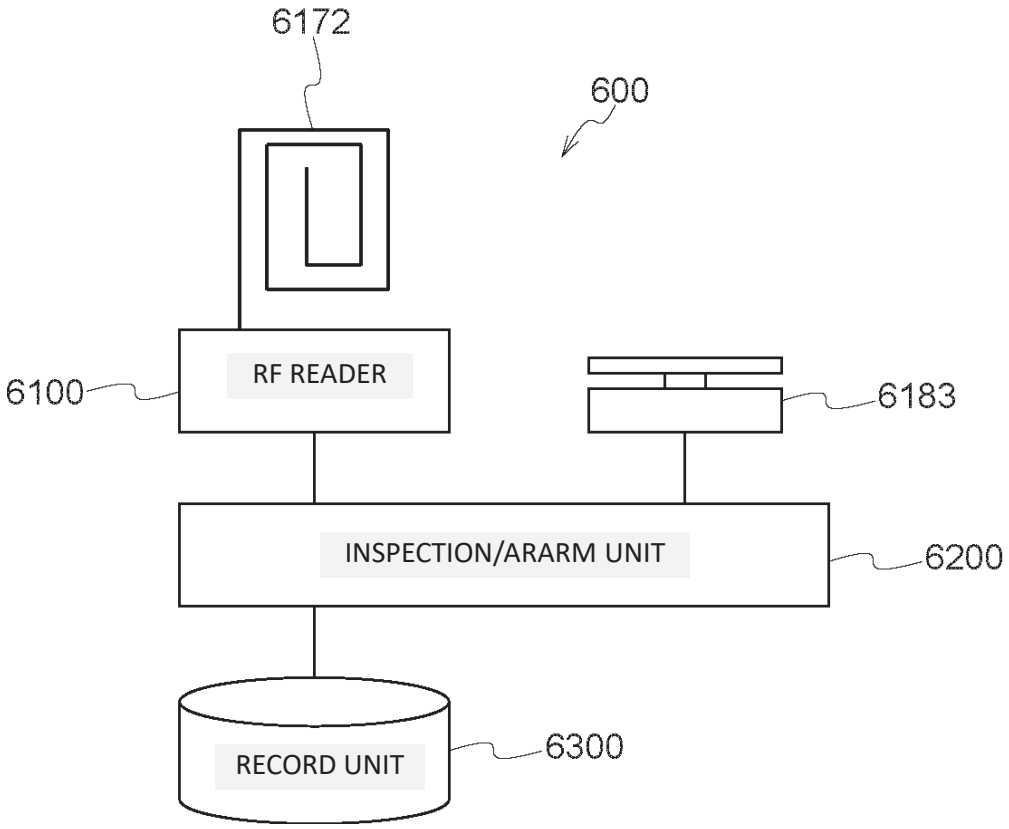
6172
600
RF READER
6100
6183
INSPECTION/ARARM UNIT
6200
RECORD UNIT
6300

Fig.80

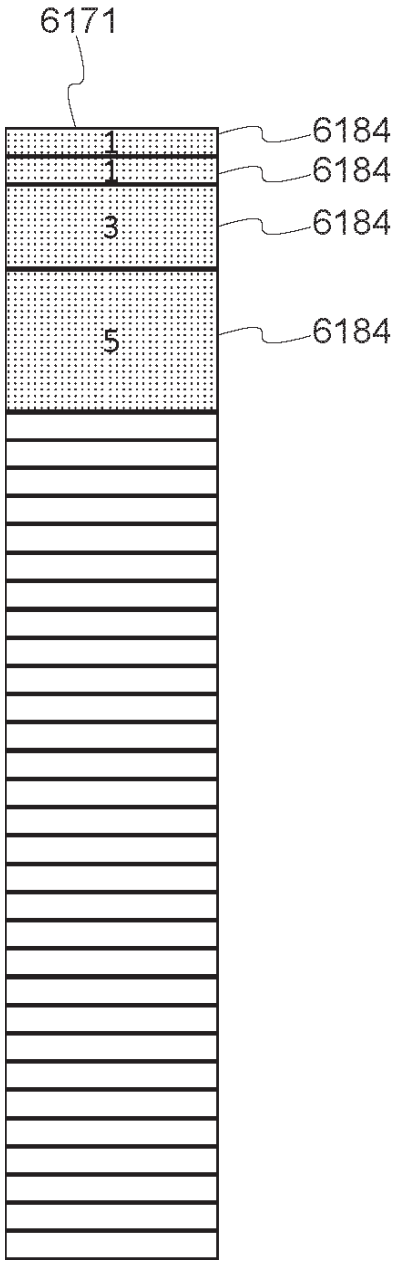

Fig.81

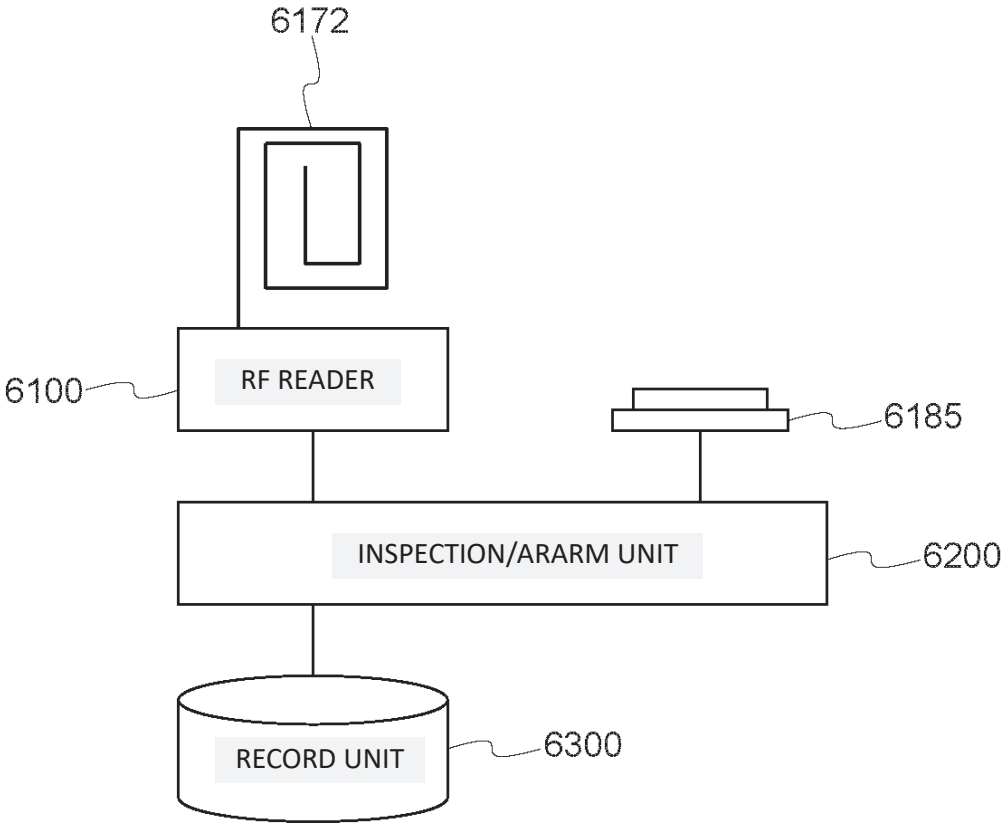
6172
6100
RF READER
6185
INSPECTION/ARARM UNIT
6200
RECORD UNIT
6300

Fig.82

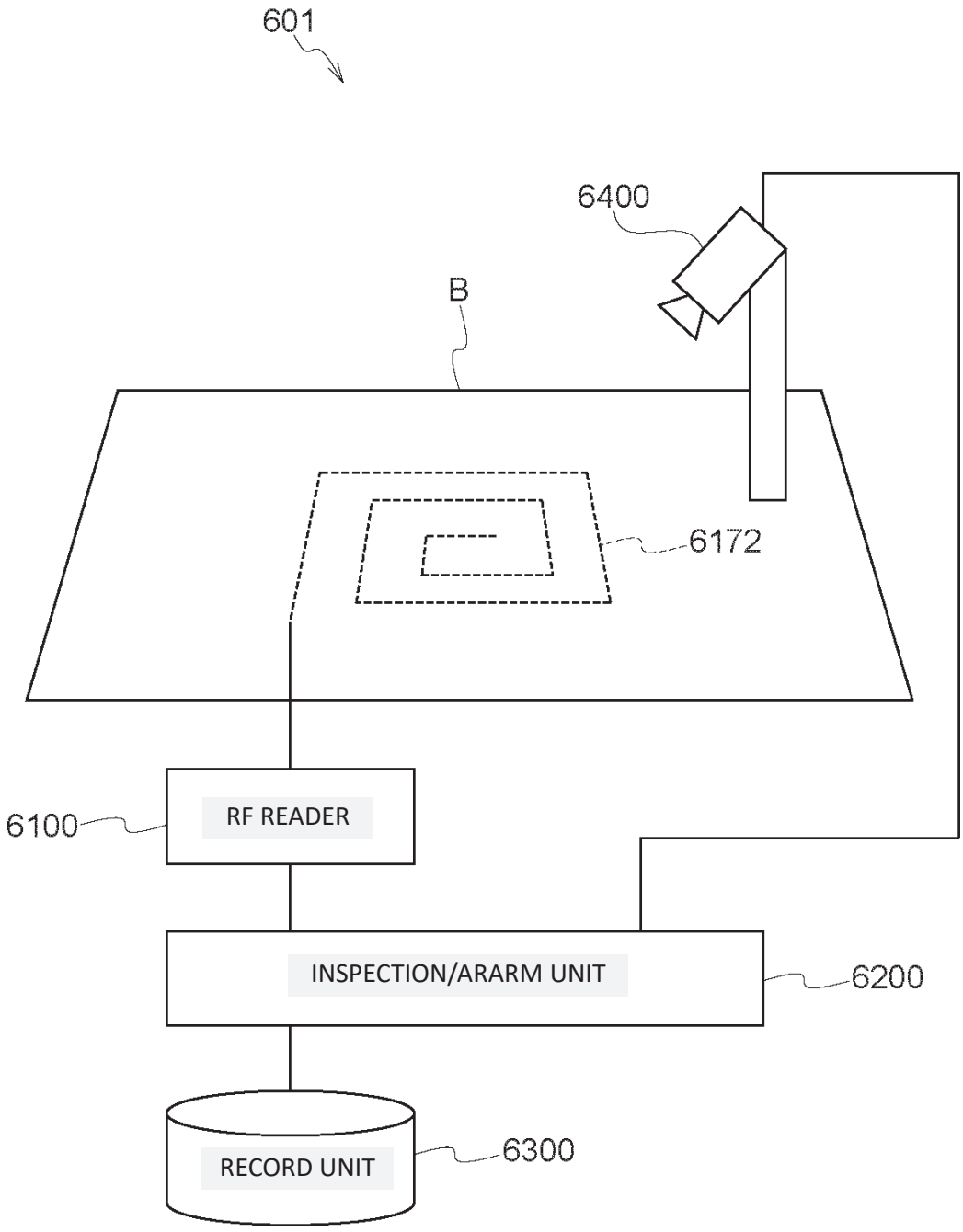
601
6400
B
6172
6100
RF READER
INSPECTION/ARARM UNIT
6200
RECORD UNIT
6300