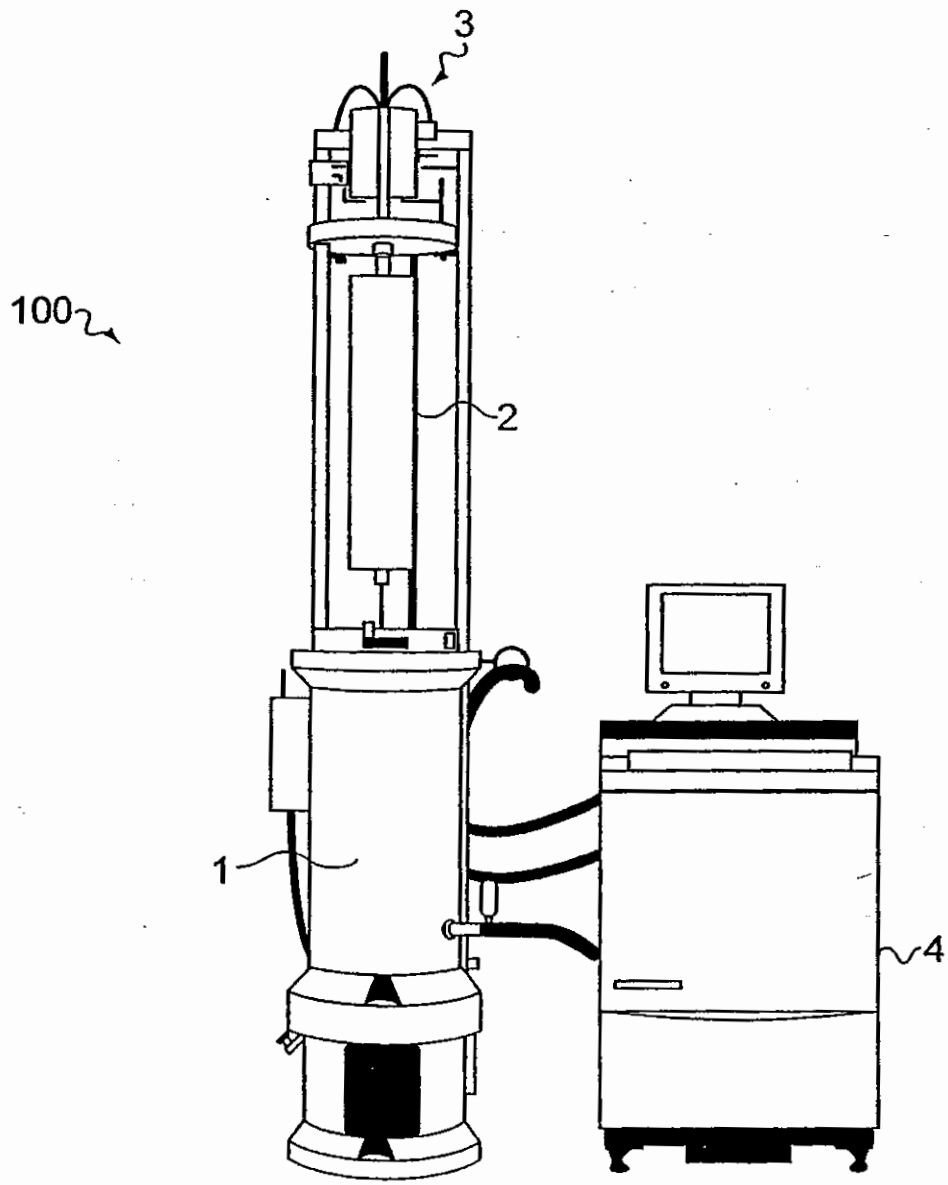
100
3
2
1
4

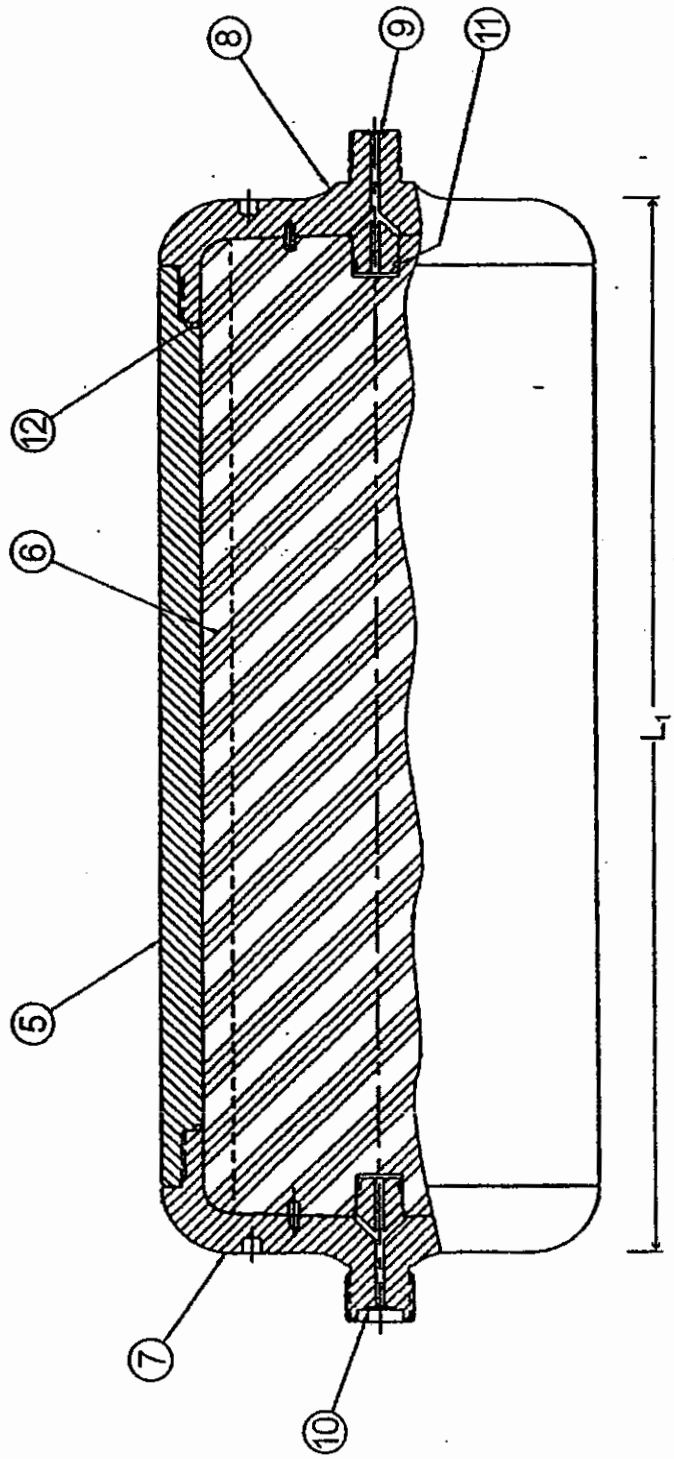

FIG. 2A

0 8 JUN 2006

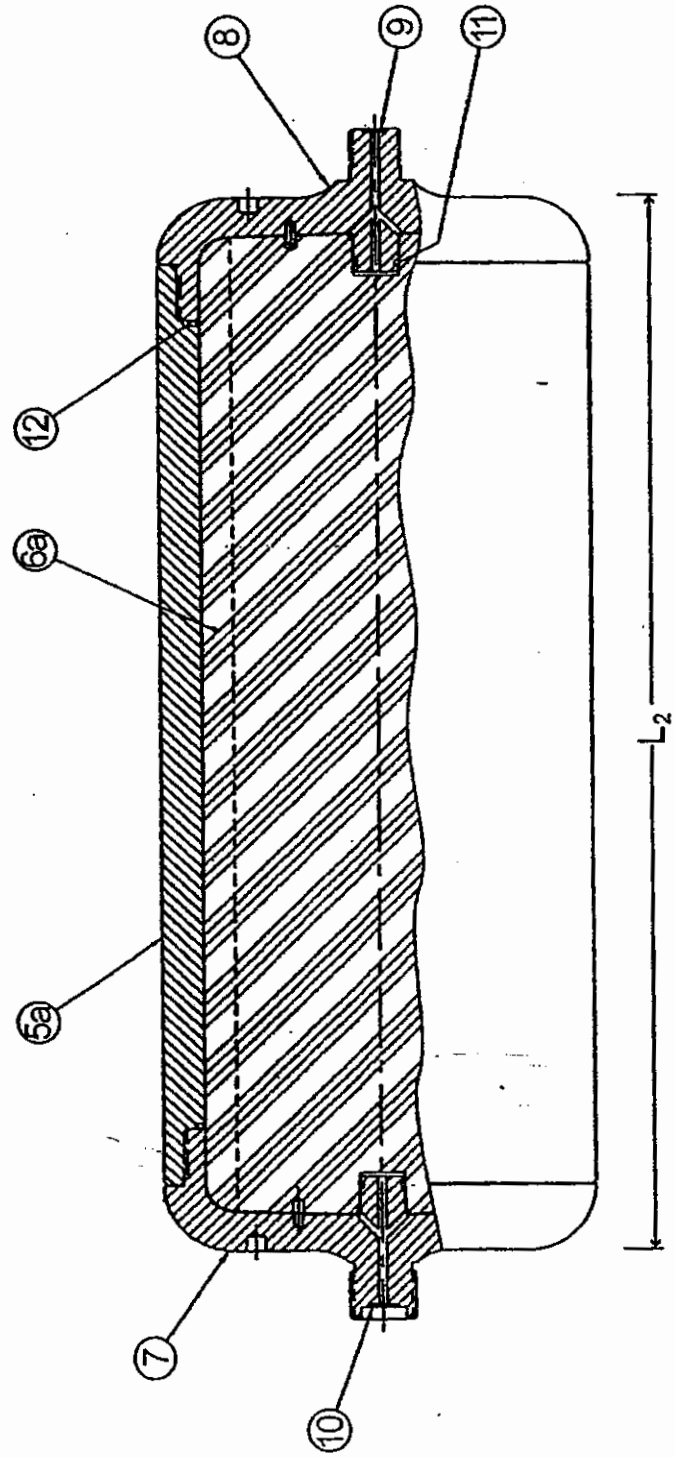

FIG. 2B

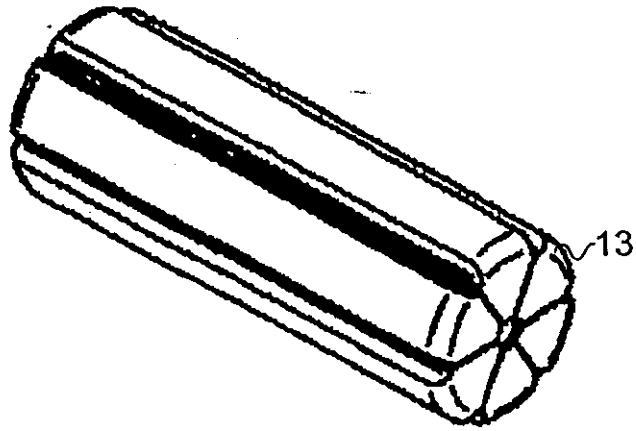

FIG. 3A

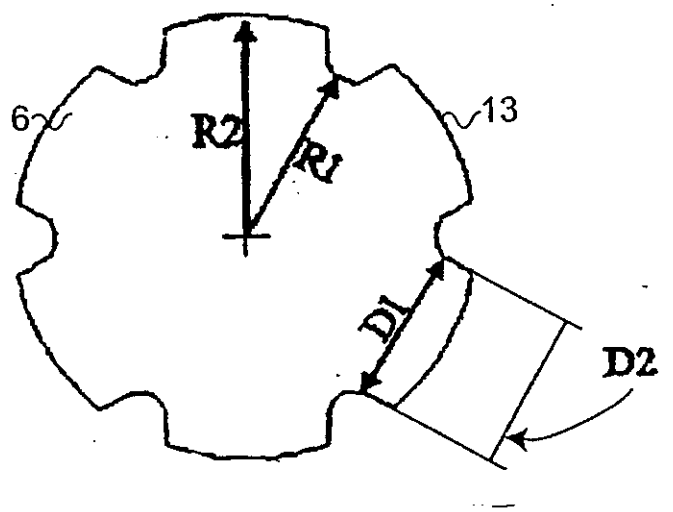

FIG. 3B

08 JUN 2006

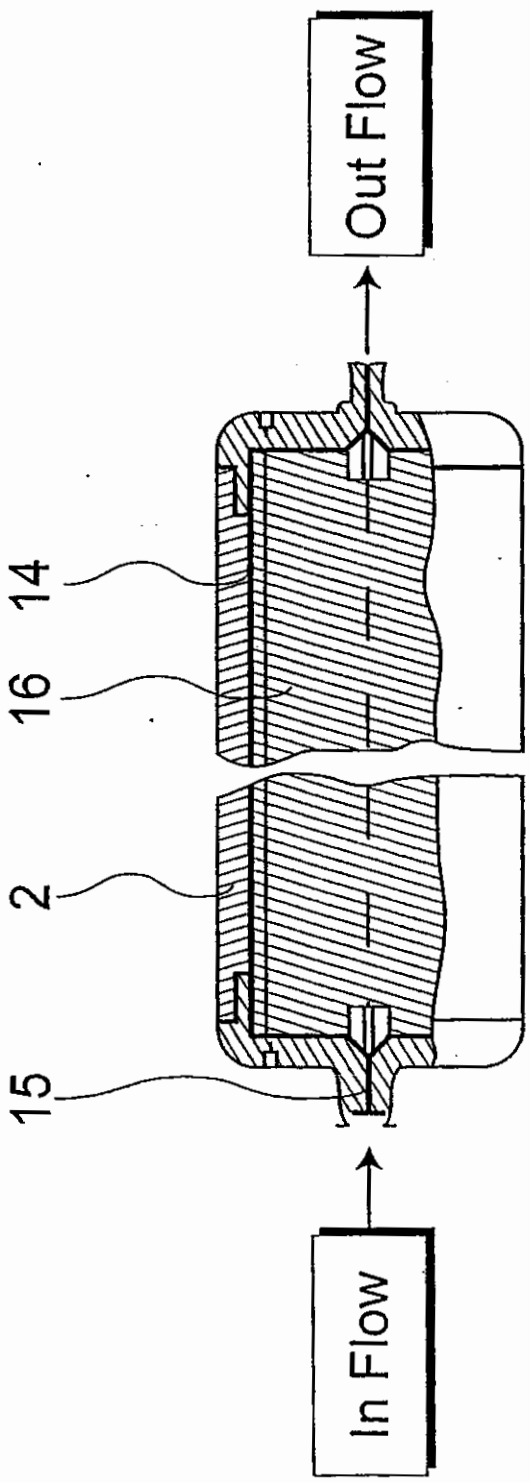

FIG. 4

08 JUN 2006

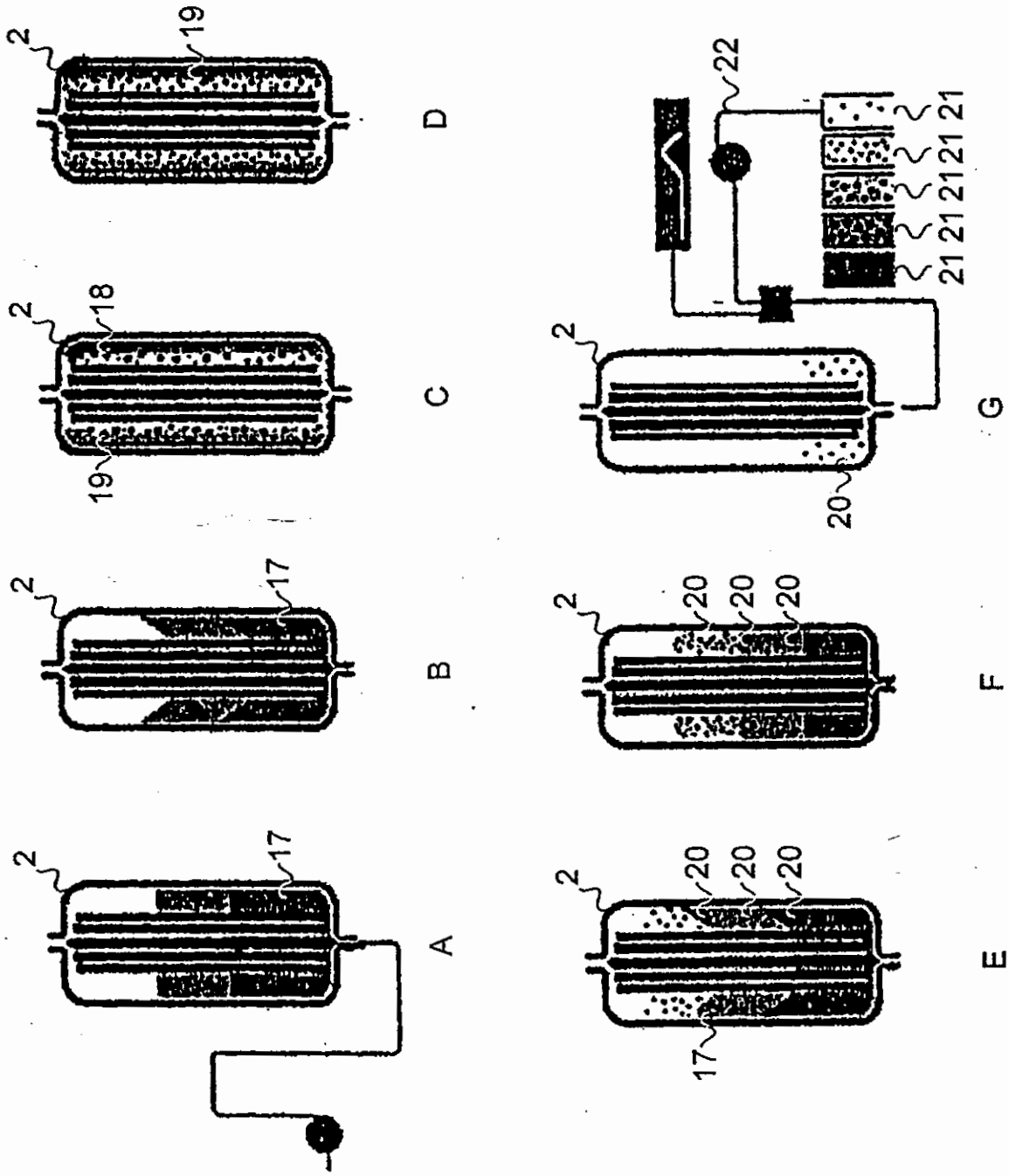

FIG. 5

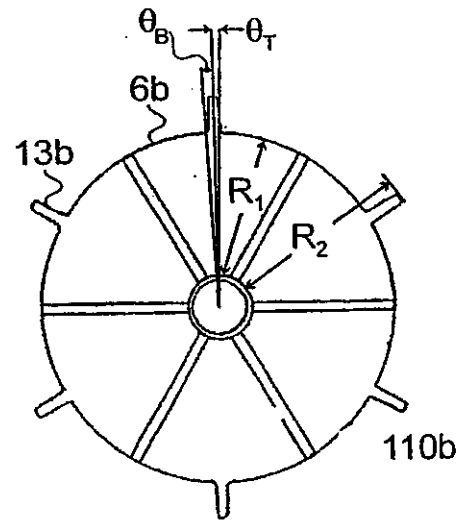

FIG. 6

R2 Outer Radius of the Core in mm
2.598 inches
R1 Inner Radius in mm
2.145 inches
Theta-T Angle formed by one-half the top fin surface in radians
0.91527174 degrees
Theta-B Angle formed by one-half the bottom fin surface in radians
0.60780781 degrees
764.3 L Length of the Core in mm
Outer Inner
V2 Total volume of the Cylinder: 10455661.2 mm^3 10456 mL
V1 Total volume of the Core trunk: 7124023.0 mm^3 7124 mL 26582.7 18112.27
W1 Fin Volume Component 1: 8470.4 mm^3 102 mL
C1 Length of the Chord formed for W2: 0.6 mm 0.023 inch
W2 Fin Volume Component 2: 2543.2 mm^3 31 mL 3.327887 0.000295
Available Volume
D1 Lateral distance across fin bottom in mm 0.114 inches (D2+0.031")
2.1 D2 Lateral distance across fin top in mm 0.083 inches
Intermediate Terms
Calculated Theta-T in radians 0.0160 0.915272 degrees 0.999
Calculated (Theta-T+Theta-B) in radians 0.0266 1.52308 degrees 0.999
Calculated Theta-B in radians 0.0106 0.607808 degrees
Calculated fin Wall Angle in radians -1.5366 -88.04247 degrees 11.5189 -0.3937

FIG. 7

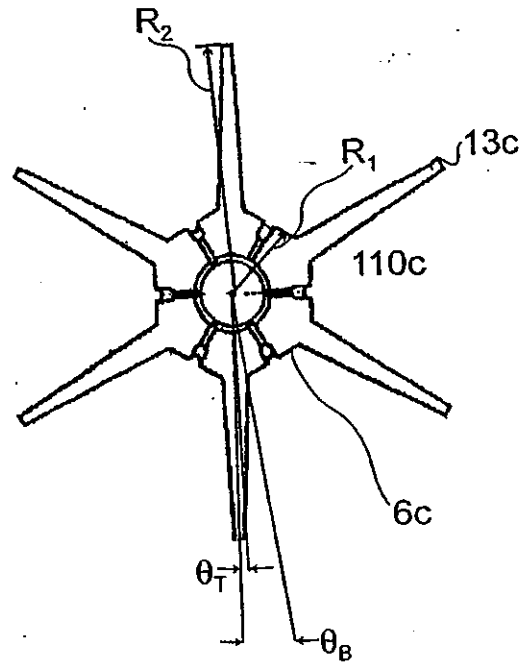

FIG. 8

2.598	R2	Outer Radius of the Core in mm	2.598	inches		
2.10	R1	Inner Radius in mm	0.825	inches		
Theta-T		Angle formed by one-half the top fin surface in radians			1.10275822	degrees
Theta-B		Angle formed by one-half the bottom fin surface in radians			7.6119838	degrees
754.1	L	Length of the Core in mm				
29690						
V2	Total volume of the Cylinder:		10316669.4	mm^3	10317	mL
V1	Total volume of the Core trunk:		1040325.2	mm^3	1040	mL
W1	Fin Volume Component 1:		28415.5	mm^3	341	mL
C1	Length of the Chord formed for W2:		2.8	mm	0.110	inch
W2	Fin Volume Component 2:		47172.1	mm^3	566	mL

						Outer	Inner
						62.6377	0.085731
						31602.2	3186.742

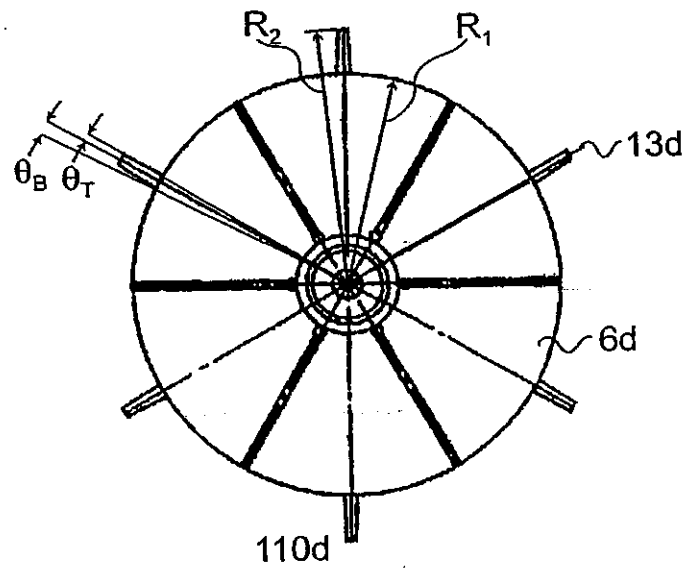

FIG. 10

R2	Outer Radius of the Core in mm	2.598	Inches		
R1	Inner Radius in mm	2.145	inches		
Theta-T	Angle formed by one-half the top fin surface in radians	0.91527174	degrees		
Theta-B	Angle formed by one-half the bottom fin surface in radians	0.60780781	degrees		
L	Length of the Core in mm				
V2	Total volume of the Cylinder:	10433770.0 mm^3	10434 mL		
V1	Total volume of the Core trunk:	7109107.3 mm^3	7109 mL	Outer	Inner
W1	Fin Volume Component 1:	8452.7 mm^3	101 mL	26527.04	18074.35
C1	Length of the Chord formed for W2:	0.6 mm	0.023 inch		
W2	Fin Volume Component 2:	2537.9 mm^3	30 mL	3.327887	0.000295
D1	Lateral distance across fin bottom in mm		0.114 inches	(D2+0.031")	
D2	Lateral distance across fin top in mm		0.083 inches		
				Intermediate Terms	
	Calculated Theta-T in radians	0.0160	0.915272 degrees	0.999	
	Calculated (Theta-T+Theta-B) in radians	0.0266	1.52308 degrees	0.999	
	Calculated Theta-B in radians	0.0106	0.607808 degrees		
	Calculated fin Wall Angle in radians	-1.5366	-88.04247 degrees	11.5189	-0.3937

FIG. 11

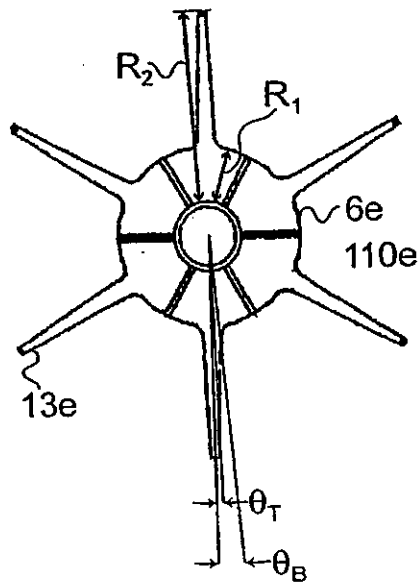

FIG. 12

66.0	R2	Outer Radius of the Core in mm	2.598	inches		
26.7	R1	Inner Radius in mm	1.052	inches		
	Theta-T	Angle formed by one-half the top fin surface in radians	0.0217	1.2461381	degrees	
	Theta-B	Angle formed by one-half the bottom fin surface in radians	0.0844	4.83798852	degrees	
764.3	L	Length of the Core in mm				
30.090						
V2	Total volume of the Cylinder:		10455661.2 mm^3	10456 mL		
V1	Total volume of the Core trunk:		1714370.5 mm^3	1714 mL	Outer	Inner
W1	Fin Volume Component 1:		30257.9 mm^3	363 mL	36192.22	5934.284
C1	Length of the Chord formed for W2:		2.3 mm	0.089 inch		
W2	Fin Volume Component 2:		33818.5 mm^3	406 mL	44.28434	0.035809
	Available Volume		7672.3 mm^3	8.0 L		
	D1	Lateral distance across fin bottom in mm	0.223 inches	(D2+0.031")	0.56642	
2.9	D2	Lateral distance across fin top in mm	0.113 inches			
0.113						
					Intermediate Terms	
	Calculated Theta-T in radians		0.0217	1.246138 degrees	0.999	
	Calculated (Theta-T+Theta-B) in radians		0.1062	6.084127 degrees	0.978	
	Calculated Theta-B in radians		0.0844	4.837989 degrees		
	Calculated fin Wall Angle in radians		-1.5352	-87.96252 degrees	39.2684	-1.397

FIG. 13

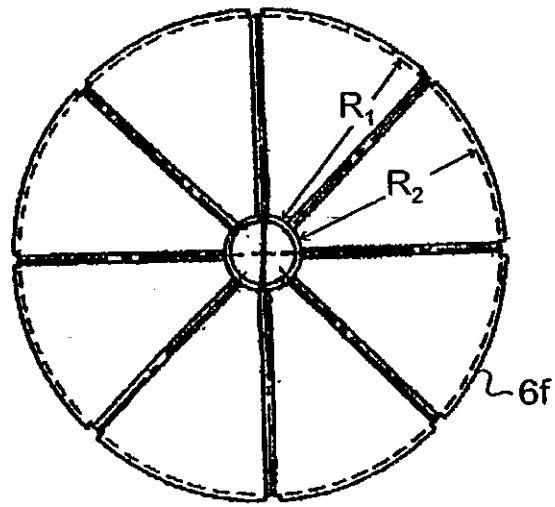

FIG. 14

R2
R1
Theta-T
Theta-B
L
V2
V1
W1
C1
W2
D1
D2
Outer Radius of the Core in mm
Inner Radius in mm
Angle formed by one-half the top fin surface in radians
Angle formed by one-half the bottom fin surface in radians
Length of the Core in mm
Total volume of the Cylinder:
Total volume of the Core trunk:
Fin Volume Component 1:
Length of the Chord formed for W2:
Fin Volume Component 2:
Lateral distance across fin bottom in mm
Lateral distance across fin top in mm
Calculated Theta-T in radians
Calculated (Theta-T+Theta-B) in radians
Calculated Theta-B in radians
Calculated fin Wall Angle in radians
2.598 inches
2.561 inches
0 degrees
0 degrees
764.3
10455661.2 mm^3
10159968.6 mm^3
0.0 mm^3
0.0 mm
0.0 mm^3
10456 mL
10160 mL
0 mL
0.000 inch
0 mL
Outer
Inner
0
0
0
0
0.000 inches
0.000 inches
(D2+0.031")
0.0
0.0000
0.0000
0.0000
#DIV/0!
0 degrees
0 degrees
0 degrees
#DIV/0! degrees
Intermediate Terms
1.000
1.000
0.9398
0

FIG. 15

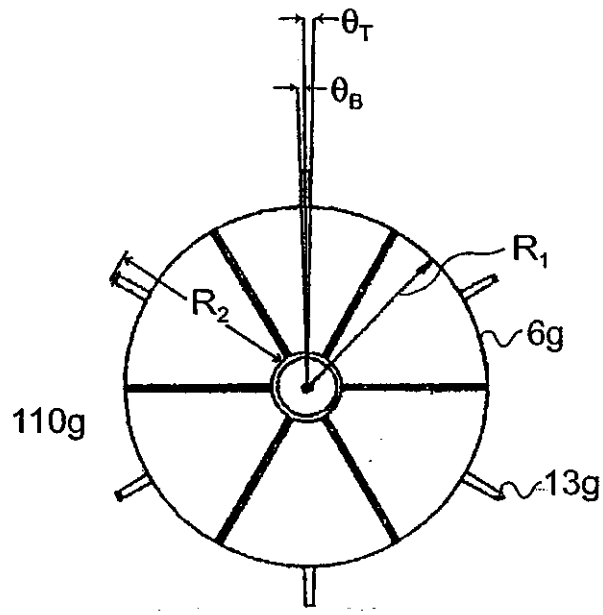

FIG. 16

R2	Outer Radius of the Core in mm	2.598	inches	5.196	
R1	Inner Radius in mm	2.145	inches	4.29	
Theta-T	Angle formed by one-half the top fin surface in radians			0.91527174	degrees
Theta-B	Angle formed by one-half the bottom fin surface in radians			0.6074527	degrees
382.1 L	Length of the Core in mm				

V2	Total volume of the Cylinder:	5227135.7	mm^3	5227	mL	
V1	Total volume of the Core trunk:	3563198.9	mm^3	3563	mL	
W1	Fin Volume Component 1:	4230.4	mm^3	51	mL	
C1	Length of the Chord formed for W2:	0.6	mm	0.023	inch	
W2	Fin Volume Component 2:	1269.6	mm^3	15	mL	

		Outer	Inner
		13289.58	9059.154
		3.32306	0.000295

D1	Lateral distance across fin bottom in mm	0.114	inches	(D2+0.031")
2.1 D2	Lateral distance across fin top in mm	0.083	inches	
0.083				

		Intermediate Terms	
Calculated Theta-T in radians	0.0160	0.915272 degrees	0.999
Calculated (Theta-T+Theta-B) in radians	0.0266	1.522724 degrees	0.999
Calculated Theta-B in radians	0.0106	0.607453 degrees	
Calculated fin Wall Angle in radians	-1.5366	-88.04031 degrees	11.5062 -0.3937

FIG. 17

08 JUN 2006

[illegible]	R2	Outer Radius of the Core in mm	2.538	inches		
[illegible]	R1	Inner Radius in mm	2.145	inches		
	Theta-T	Angle formed by one-half the top fin surface in radians	[illegible]		14.4433492	degrees
	Theta-B	Angle formed by one-half the bottom fin surface in radians	[illegible]		3.57949303	degrees
382.1	L	Length of the Core in mm				

V2	Total volume of the Cylinder:	5227135.7 mm^3	5227 mL		
V1	Total volume of the Core trunk:	3561538.0 mm^3	3562 mL	Outer	Inner
W1	Fin Volume Component 1:	66824.5 mm^3	802 mL	209714.8	142890.4
C1	Length of the Chord formed for W2:	3.4 mm	0.134 inch		
W2	Fin Volume Component 2:	7405.1 mm^3	89 mL	19.44062	0.060277

[illegible] Available Volume [illegible] [illegible] [illegible]

R2	Outer Radius of the Core in mm	2.598	inches	5.196	
R1	Inner Radius in mm	2.145	inches	4.29	
Theta-T	Angle formed by one-half the top fin surface in radians	[illegible]		20.8573877	degrees
Theta-B	Angle formed by one-half the bottom fin surface in radians	[illegible]		5.14837464	degrees
382.1 L	Length of the Core in mm				

V2	Total volume of the Cylinder:	5227135.7	mm^3	5227	mL	
V1	Total volume of the Core trunk:	3563198.9	mm^3	3563	mL	
W1	Fin Volume Component 1:	96403.8	mm^3	1157	mL	
C1	Length of the Chord formed for W2:	4.9	mm	0.193	Inch	
W2	Fin Volume Component 2:	10511.8	mm^3	126	mL	

	Outer	Inner
	302845.5	206441.7
	27.69047	0.179394

[illegible]

D1	Lateral distance across fin bottom in mm	1.881	inches	(D2+0.031")
47.0 D2	Lateral distance across fin top in mm	1.850	inches	
1.850				

		Intermediate Terms
Calculated Theta-T in radians	0.3640	20.85739 degrees 0.746
Calculated (Theta-T+Theta-B) in radians	0.4539	26.00576 degrees 0.616
Calculated Theta-B in radians	0.0899	5.148375 degrees
Calculated fin Wall Angle in radians	-1.5366	-88.04031 degrees 11.5062 -0.3937

FIG. 19

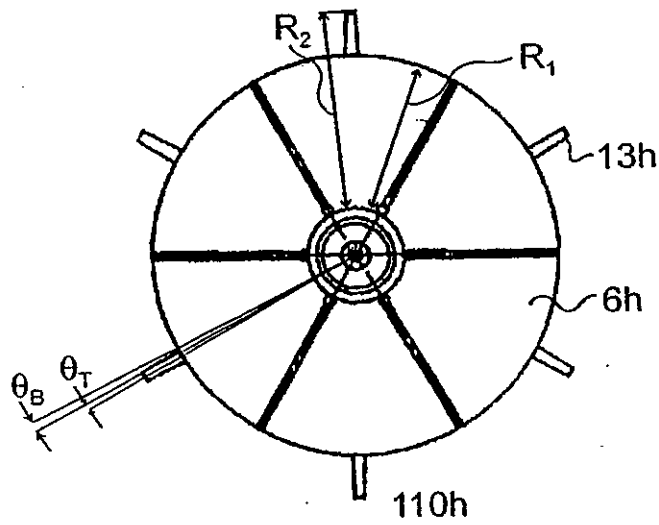

FIG. 20

[illegible]	R2	Outer Radius of the Core in mm	2.598	inches	
[illegible]	R1	Inner Radius in mm	2.145	inches	
	Theta-T	Angle formed by one-half the top fin surface in radians	[illegible]	1.25716763	degrees
	Theta-B	Angle formed by one-half the bottom fin surface in radians	[illegible]	0.6802237	degrees
380.5	L	Length of the Core in mm			

V2	Total volume of the Cylinder:	5205244.4	mm^3	5205	mL	
V1	Total volume of the Core trunk:	3546622.3	mm^3	3547	mL	Outer 18177.4 Inner 12385.27
W1	Fin Volume Component 1:	5792.1	mm^3	70	mL	
C1	Length of the Chord formed for W2:	0.6	mm	0.025	inch	
W2	Fin Volume Component 2:	1416.9	mm^3	17	mL	3.724271 0.000414
[illegible]	Available Volume	[illegible]		[illegible]		

	D1	Lateral distance across fin bottom in mm	0.145 inches	(D2+0.031") [illegible]
2.9	D2	Lateral distance across fin top in mm	0.114 inches	
0.114				

				Intermediate Terms	
Calculated Theta-T in radians	0.0219	1.257168	degrees	0.999	
Calculated (Theta-T+Theta-B) in radians	0.0338	1.937391	degrees	0.998	
Calculated Theta-B in radians	0.0119	0.680224	degrees		
Calculated fin Wall Angle in radians	-1.5366	-88.04247	degrees	11.5189	-0.3937

FIG. 21

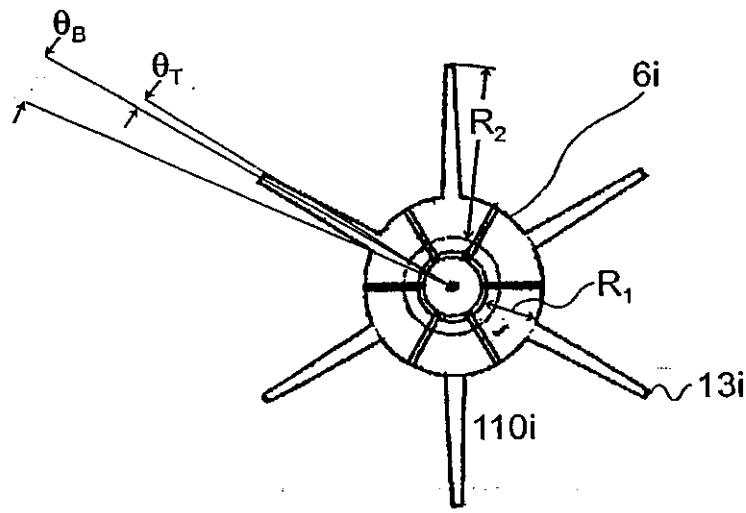

FIG. 22

R2	Outer Radius of the Core in mm	2.598	inches		
R1	Inner Radius in mm	1.052	inches		
Theta-T	Angle formed by one-half the top fin surface in radians			1.2461381	degrees
Theta-B	Angle formed by one-half the bottom fin surface in radians			7.30918223	degrees
382.1 L	Length of the Core in mm				

				Outer	Inner
V2	Total volume of the Cylinder:	5227135.7	mm^3	5227 mL	
V1	Total volume of the Core trunk:	857071.3	mm^3	857 mL	
W1	Fin Volume Component 1:	15127.0	mm^3	182 mL	18093.7 2966.748
C1	Length of the Chord formed for W2:	3.4	mm	0.134 inch	
W2	Fin Volume Component 2:	25506.7	mm^3	306 mL	66.87882 0.123425

D1	Lateral distance across fin bottom in mm	0.313	inches	(D2+0.031")
2.9 D2	Lateral distance across fin top in mm	0.113	inches	

			Intermediate Terms
Calculated Theta-T in radians	0.0217	1.246138 degrees	0.999
Calculated (Theta-T+Theta-B) in radians	0.1493	8.55532 degrees	0.956
Calculated Theta-B in radians	0.1276	7.309182 degrees	
Calculated fin Wall Angle in radians	-1.5062	-86.29909 degrees	39.2884 -2.54

FIG. 23

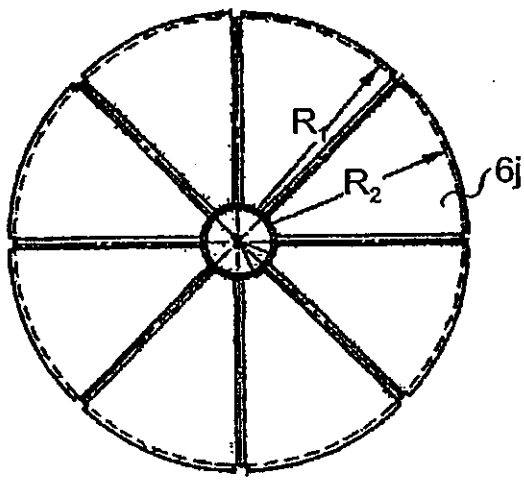

FIG. 24

08 JUN 2006

66.0	R2	Outer Radius of the Core in mm		2.598	inches	[illegible]		
65.0	R1	Inner Radius in mm		2.561	inches	[illegible]		
	Theta-T	Angle formed by one-half the top fin surface in radians		0.0000		0 degrees		
	Theta-B	Angle formed by one-half the bottom fin surface in radians		0.0000		0 degrees		
382.1	L	Length of the Core in mm						
15.048								
V2	Total volume of the Cylinder:		5227135.7 mm^3		5227 mL			
V1	Total volume of the Core trunk:		5079309.0 mm^3		5079 mL		Outer	Inner
W1	Fin Volume Component 1:		0.0 mm^3		0 mL		0	0
C1	Length of the Chord formed for W2:		0.0 mm		0.000 inch			
W2	Fin Volume Component 2:		0.0 mm^3		0 mL		0	0
[illegible]	Available Volume [illegible]		[illegible]		0.1 L			
	D1	Lateral distance across fin bottom in mm		0.000 inches		(D2+0.031")	0.0000	
0.0	D2	Lateral distance across fin top in mm		0.000 inches				
0.000							Intermediate Terms	
	Calculated Theta-T in radians		0.0000		0 degrees		1.000	
	Calculated (Theta-T+Theta-B) in radians		0.0000		0 degrees		1.000	
	Calculated Theta-B in radians		0.0000		0 degrees			
	Calculated fin Wall Angle in radians		#DIV/0!	#DIV/0!	degrees		0.9398	0

FIG. 25

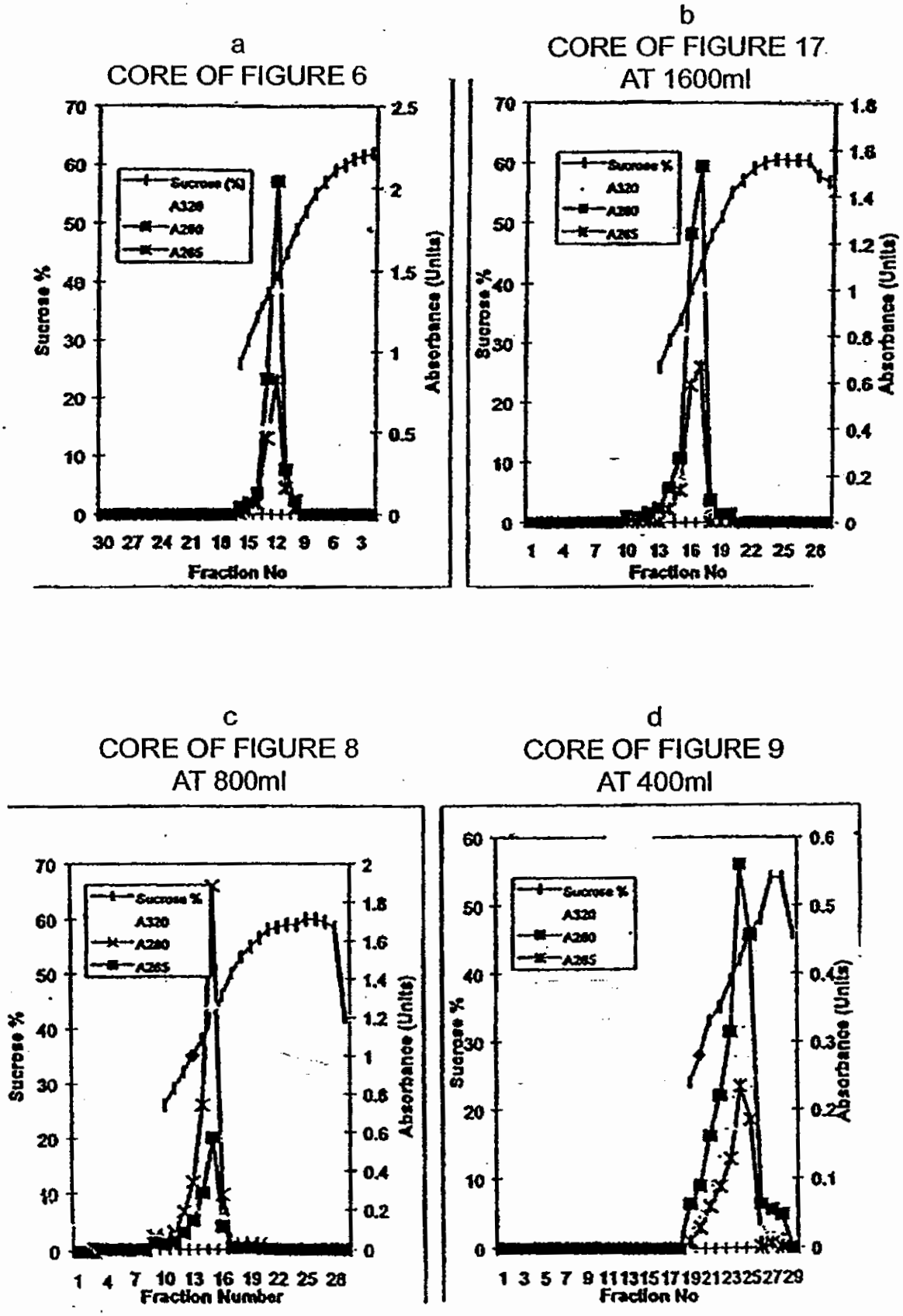
a
CORE OF FIGURE 6
Sucrose (%)
A320
A280
A265
Sucrose %
Absorbance (Units)
Fraction No
b
CORE OF FIGURE 17
AT 1600ml
Sucrose %
A320
A280
A265
Sucrose %
Absorbance (Units)
Fraction No
c
CORE OF FIGURE 8
AT 800ml
Sucrose %
A320
A280
A265
Sucrose %
Absorbance (Units)
Fraction Number
d
CORE OF FIGURE 9
AT 400ml
Sucrose %
A320
A280
A265
Sucrose %
Absorbance (Units)
Fraction No

FIG. 26