FIG.1

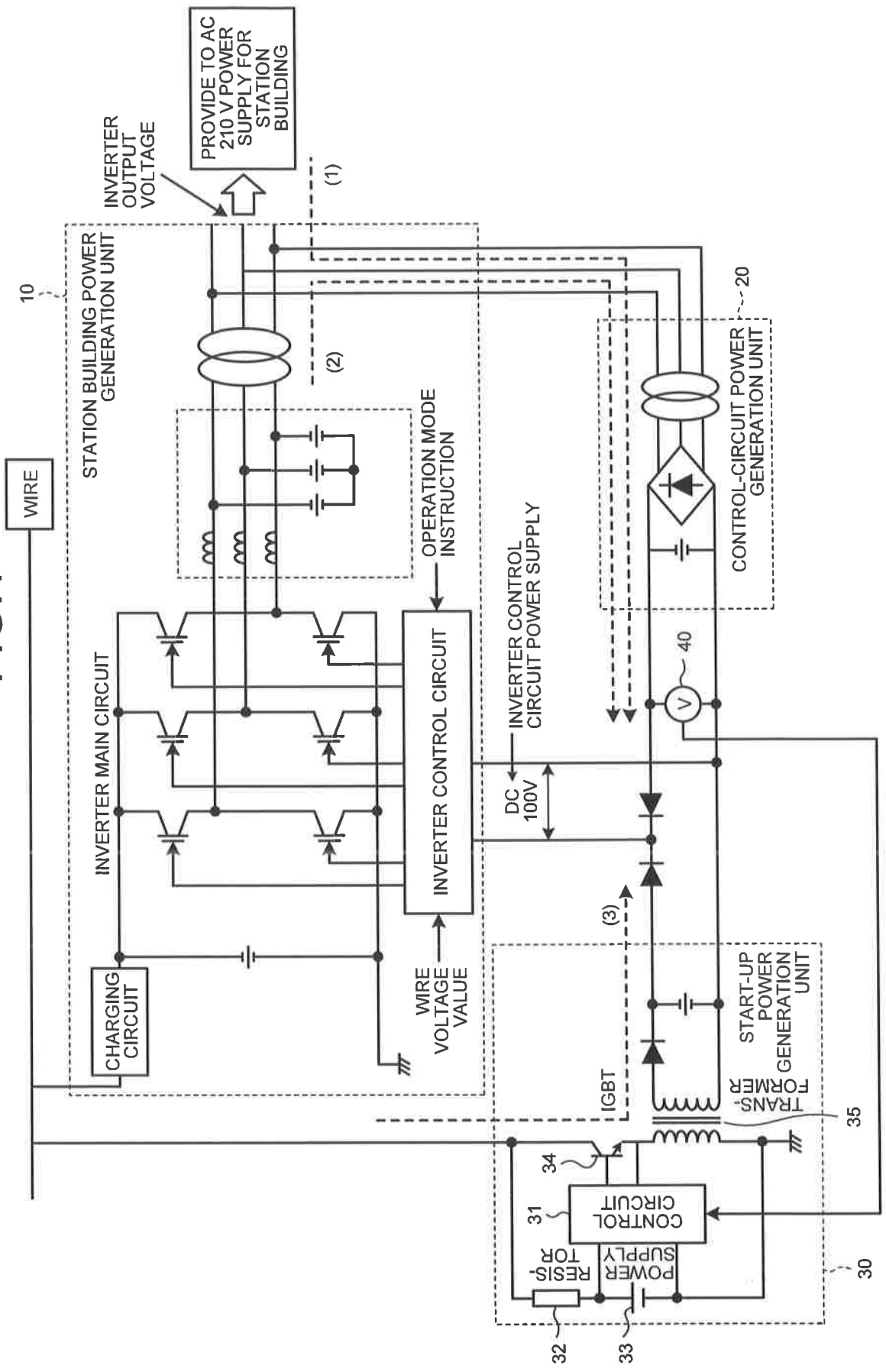
WIRE
10
STATION BUILDING POWER GENERATION UNIT
INVERTER OUTPUT VOLTAGE
PROVIDE TO AC 210 V POWER SUPPLY FOR STATION BUILDING
(1)
(2)
OPERATION MODE INSTRUCTION
INVERTER MAIN CIRCUIT
INVERTER CONTROL CIRCUIT
INVERTER CONTROL CIRCUIT POWER SUPPLY
DC 100V
CONTROL-CIRCUIT POWER GENERATION UNIT
20
40
V
CHARGING CIRCUIT
WIRE VOLTAGE VALUE
(3)
IGBT
START-UP POWER GENERATION UNIT
TRANS-FORMER
35
34
31
CONTROL CIRCUIT
POWER SUPPLY
RESIS-TOR
30
32
33