(12) INTERNATIONAL APPLICATION PUBLISHED UNDER THE PATENT COOPERATION TREATY (PCT)

(19) World Intellectual Property Organization
International Bureau

(43) International Publication Date
25 September 2025 (25.09.2025)

WIPO | PCT

(10) International Publication Number
WO 2025/196650 A1

(51) International Patent Classification:
B01L 3/02 (2006.01) *B01L 3/00* (2006.01)

(21) International Application Number:
PCT/IB2025/052856

(22) International Filing Date:
19 March 2025 (19.03.2025)

(25) Filing Language: English

(26) Publication Language: English

(30) Priority Data:
63/567,218 19 March 2024 (19.03.2024) US

(71) Applicant: **ELEMENT BIOSCIENCES, INC.** [US/US]; 10055 Barnes Canyon Road, Suite 100, San Diego, California 92121 (US).

(72) Inventors; and

(71) Applicants: **LIN, Bill Kengli** [CA/US]; c/o Element Biosciences, Inc., 10055 Barnes Canyon Road, Suite 100, San Diego, California 92121 (US). **YU, Yingxian** [CN/US]; c/o Element Biosciences, Inc., 10055 Barnes Canyon Road, Suite 100, San Diego, California 92121 (US). **CHANG, Chiting** [CN/US]; c/o Element Biosciences, Inc., 10055 Barnes Canyon Road, Suite 100, San Diego, California 92121 (US). **WU, Chueh-Yu** [CN/US]; c/o Element Biosciences, Inc., 10055 Barnes Canyon Road, Suite 100, San Diego, California 92121 (US).

(72) Inventors: **LU, Jingzhi**; c/o Element Biosciences, Inc., 10055 Barnes Canyon Road, Suite 100, San Diego, California 92121 (US). **RAY, Michael Charles**; c/o Element Biosciences, Inc., 10055 Barnes Canyon Road, Suite 100, San Diego, California 92121 (US). **XING, Siyuan**; c/o Element Biosciences, Inc., 10055 Barnes Canyon Road, Suite 100, San Diego, California 92121 (US). **KHANDAN, Omid**; c/o Element Biosciences, Inc., 10055 Barnes Canyon Road, Suite 100, San Diego, California 92121 (US). **YEH, Jeffrey**; c/o Element Biosciences, Inc., 10055 Barnes Canyon Road, Suite 100, San Diego, California 92121 (US). **HASTINGS, Daniel**; c/o Element Biosciences, Inc., 10055 Barnes Canyon Road, Suite 100, San Diego, California 92121 (US). **DANGELO, Michael**; c/o Element Biosciences, Inc., 10055 Barnes Canyon Road, Suite 100, San Diego, California 92121 (US). **ZHAO, Da**; c/o Element Biosciences, Inc., 10055 Barnes Canyon Road, Suite 100, San Diego, California 92121 (US). **FULLER, Derek**; c/o Element Biosciences, Inc., 10055 Barnes Canyon Road,

(54) Title: FLOW CELL DEVICES AND USE THEREOF

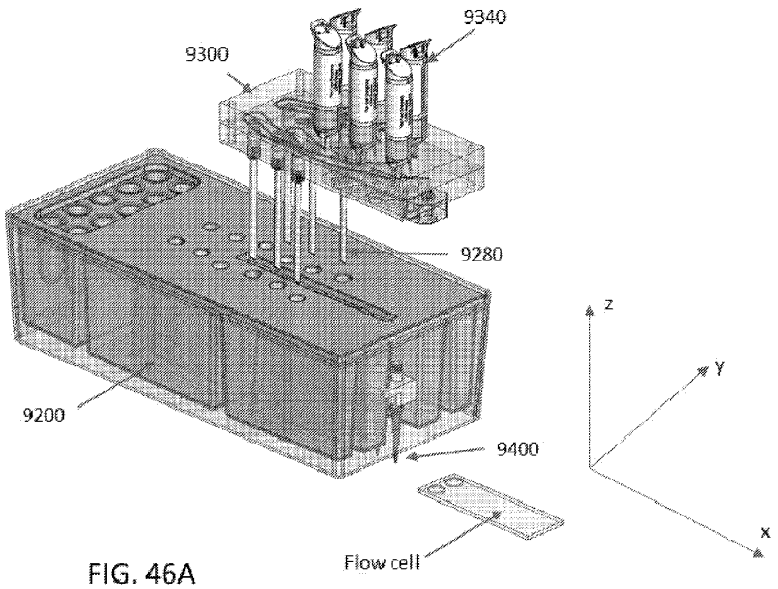

FIG. 46A

(57) Abstract: The present disclosure provides flow cell devices, systems, and methods for facilitating and performing DNA sequencing analysis with reduced system complexity and cost, significant cost of goods (COGS) savings and reduced contamination levels.

[Continued on next page]

WO 2025/196650 A1

Suite 100, San Diego, California 92121 (US). **NEYSMITH, Jordan**; c/o Element Biosciences, Inc., 10055 Barnes Canyon Road, Suite 100, San Diego, California 92121 (US). **PREVITE, Michael**; c/o Element Biosciences, Inc., 10055 Barnes Canyon Road, Suite 100, San Diego, California 92121 (US). **KWON, Hyuckjin Jean**; c/o Element Biosciences, Inc., 10055 Barnes Canyon Road, Suite 100, San Diego, California 92121 (US).

(74) **Agent: ERLACHER, Heidi** et al.; Cooley LLP, Attn: IP Docketing, 1299 Pennsylvania Avenue, NW, Suite 700, Washington, District of Columbia 20004 (US).

(81) **Designated States** *(unless otherwise indicated, for every kind of national protection available)*: AE, AG, AL, AM, AO, AT, AU, AZ, BA, BB, BG, BH, BN, BR, BW, BY, BZ, CA, CH, CL, CN, CO, CR, CU, CV, CZ, DE, DJ, DK, DM, DO, DZ, EC, EE, EG, ES, FI, GB, GD, GE, GH, GM, GT, HN, HR, HU, ID, IL, IN, IQ, IR, IS, IT, JM, JO, JP, KE, KG, KH, KN, KP, KR, KW, KZ, LA, LC, LK, LR, LS, LU, LY, MA, MD, MG, MK, MN, MU, MW, MX, MY, MZ, NA, NG, NI, NO, NZ, OM, PA, PE, PG, PH, PL, PT, QA, RO, RS, RU, RW, SA, SC, SD, SE, SG, SK, SL, ST, SV, SY, TH, TJ, TM, TN, TR, TT, TZ, UA, UG, US, UY, UZ, VC, VN, WS, ZA, ZM, ZW.

(84) **Designated States** *(unless otherwise indicated, for every kind of regional protection available)*: ARIPO (BW, CV, GH, GM, KE, LR, LS, MW, MZ, NA, RW, SC, SD, SL, ST, SZ, TZ, UG, ZM, ZW), Eurasian (AM, AZ, BY, KG, KZ, RU, TJ, TM), European (AL, AT, BE, BG, CH, CY, CZ, DE, DK, EE, ES, FI, FR, GB, GR, HR, HU, IE, IS, IT, LT, LU, LV, MC, ME, MK, MT, NL, NO, PL, PT, RO, RS, SE, SI, SK, SM, TR), OAPI (BF, BJ, CF, CG, CI, CM, GA, GN, GQ, GW, KM, ML, MR, NE, SN, TD, TG).

Published:

— *with international search report (Art. 21(3))*

— *in black and white; the international application as filed contained color or greyscale and is available for download from PATENTSCOPE*