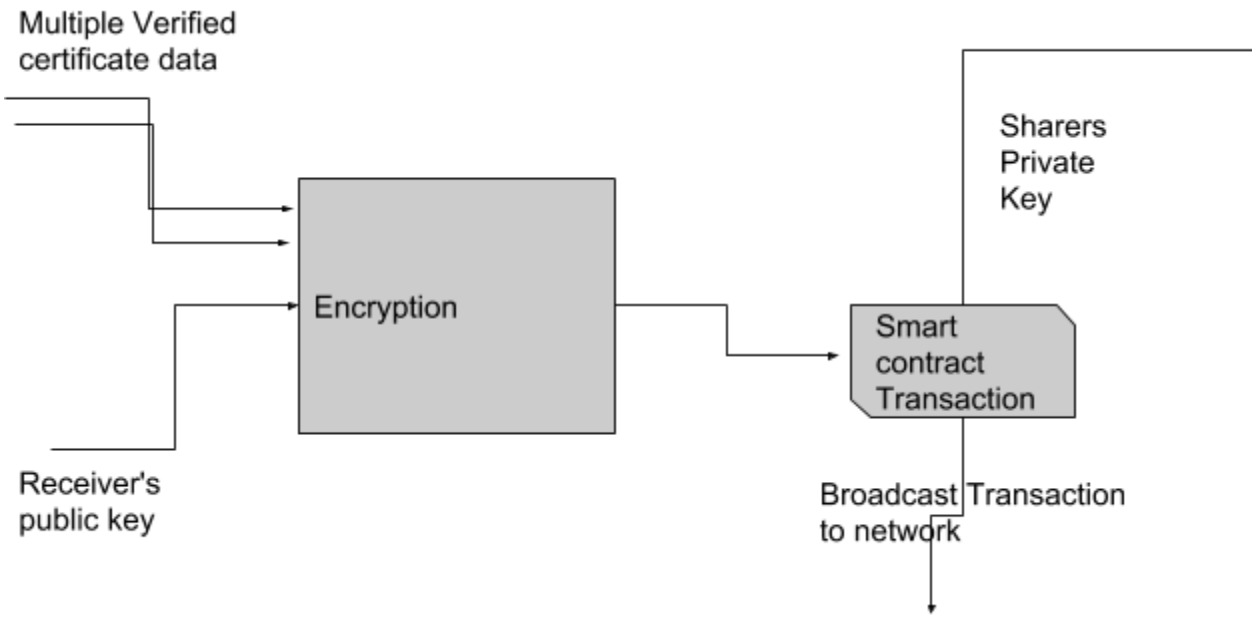
Multiple Verified
certificate data
Sharers
Private
Key
Encryption
Smart
contract
Transaction
Receiver's
public key
Broadcast Transaction
to network

Fig. 1

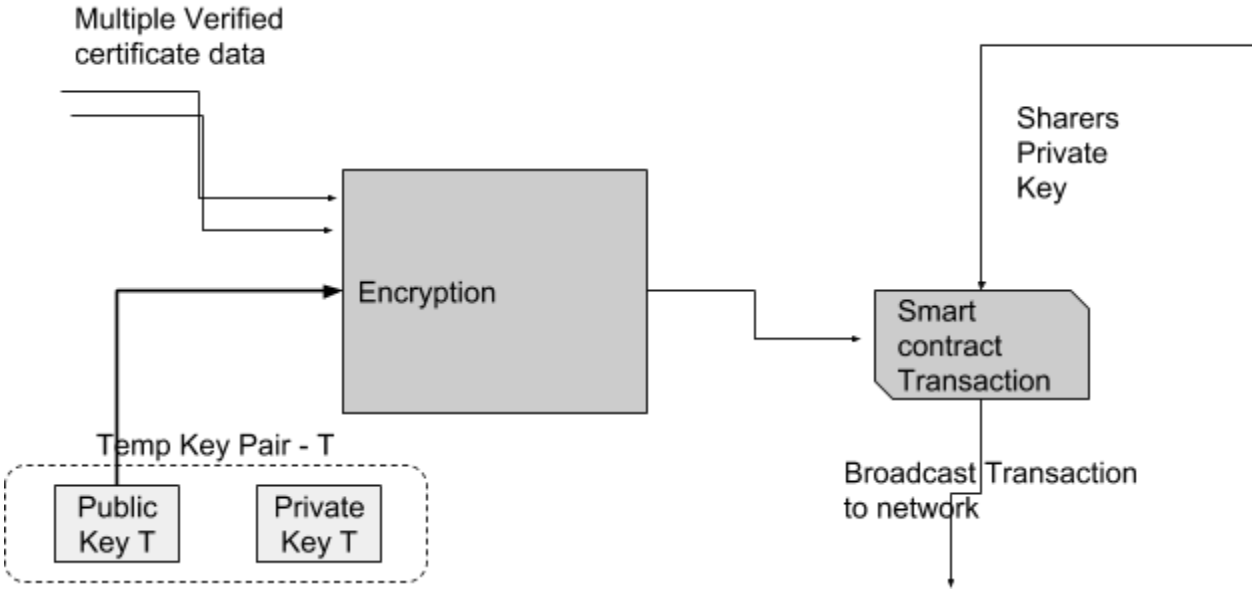
Multiple Verified
certificate data
Sharers
Private
Key
Encryption
Smart
contract
Transaction
Temp Key Pair - T
Public
Key T
Private
Key T
Broadcast Transaction
to network

Fig. 2

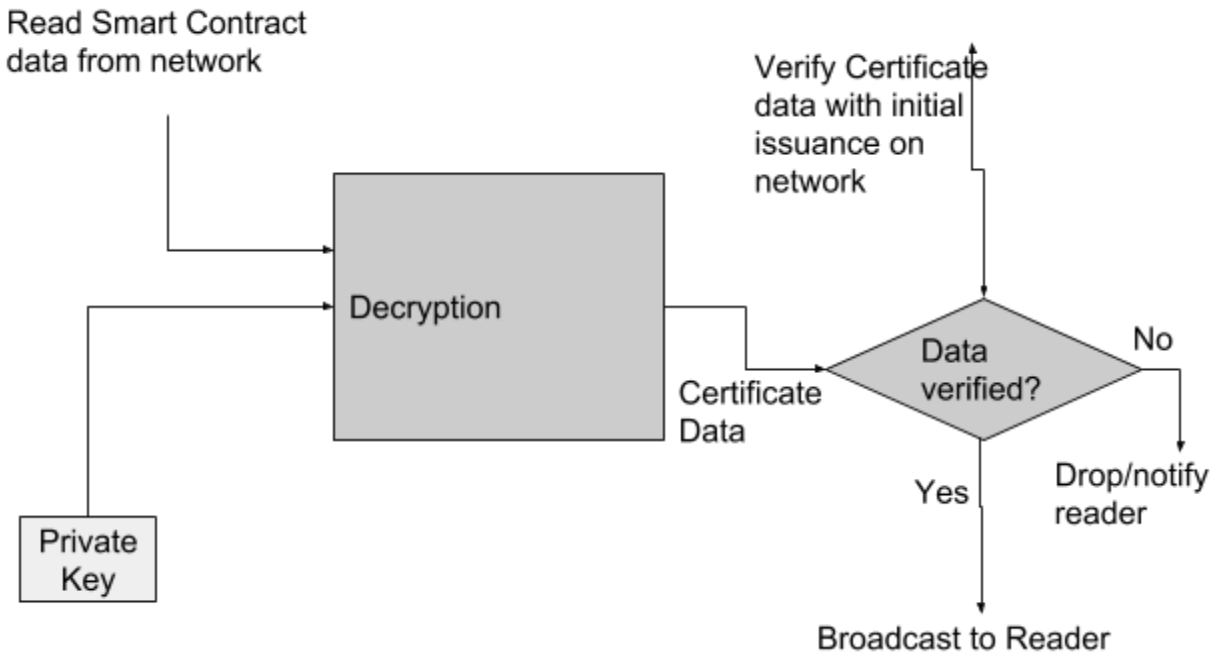
Read Smart Contract data from network
Verify Certificate data with initial issuance on network
Decryption
Data verified?
No
Certificate Data
Drop/notify reader
Yes
Private Key
Broadcast to Reader

Fig. 3